# Technical-Data-Sheet

## SKH, SKHD

## Heat shrinkable end cap

with adhesive optionally with additional sealing material

Protection against humidity and pressure for cables, conductors and pipes with a diameter of 5 - 105 mm.

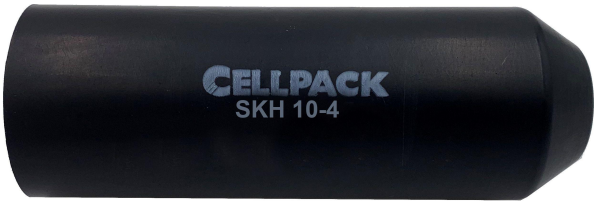


### Product description

| | |
|---|---|
| Article name | SKH 10-4 |
| Material number | 125345 |
| Characteristics | Resistant to chemical agents |
| | Stabilized against UV rays |
| | Free from paint-wetting inhibiting substances |
| | Halogen-free |
| | Superior electrical properties |
| | Pressure-tight |
| | High mechanical strength |
| | 100 % waterproof |
| Applications | Protection against moisture and pressure for cables, conductors and pipes |
| Family notes | Recovered dimension after shrinking |
| Article notes | with adhesive |

# Technical-Data-Sheet

## Technical data

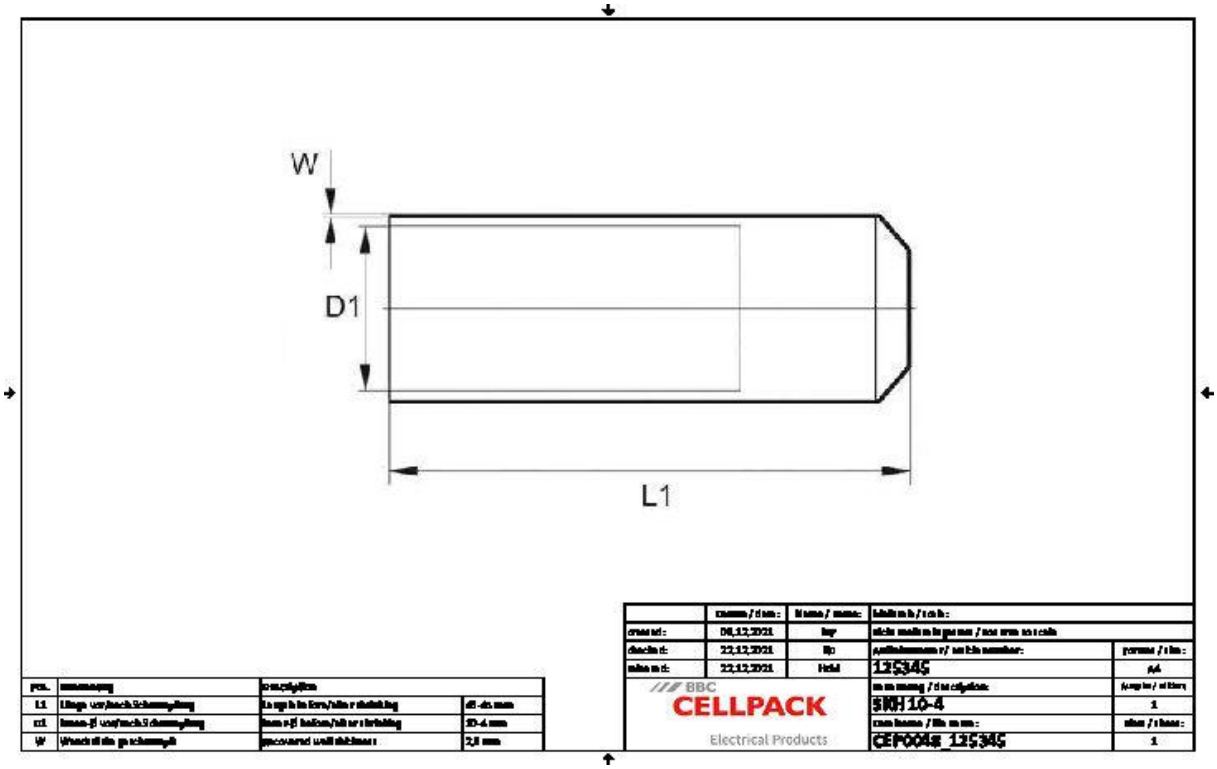


| | |
|---|---|
| Test standards | IEC 60684-2 |
| Materials | Cross-linked polyolefin |
| | Free of lead and cadmium |
| Article notes | with adhesive |
| Selection Note | with adhesive |
| Length L1 | 46 mm |
| Length L1* | 45 mm |
| Colours | black |
| Inner diameter before shrinking (mm) | 10 mm |
| Inner diameter after shrinking (mm) | 4 mm |
| Recovered wall thickness | 2.9 mm |
| Elongation at break | 300 % |
| Elongation at break (associated standard) | IEC 62677-2 |
| Tensile strength at break | 10 MPa |
| Tensile strength at break (associated standard) | IEC 62677-2 |
| Operating temperature range min | -40 °C |
| Operating temperature range max | 100 °C |
| Operating temperature range (associated standard) | IEC 62677-2 |
| Shrinkage temperature | > 110 °C |
| Burning behaviour | not self-extinguishing |
| Burning behaviour (associated standard) | IEC 60684-2 |
| Flexibility at low temperatures | -40 °C |
| Flexibility at low temperatures (associated standard) | IEC 62677-2 |
| Thermal ageing (168 h at 150 °C): Elongation at break | 200 % |
| Thermal ageing (168 h bei 150 °C): Tensile strength at break | 8 MPa |
| Thermal ageing (168 h bei 150 °C) (associated standard) | IEC 62677-2 |
| Specific volume resistivity | $10^{12}$ Ω cm |
| Specific volume resistivity (associated standard) | IEC 60243-2 |
| Dielectric strength | 10 kV/mm |
| Dielectric strength (associated standard) | IEC 60243-1 |

| | |
|---|---|
| Corrosion | none |
| Corrosion (associated standard) | EN 62677-2 |
| Resistance to fungus and decay | Rate 1 |
| Resistance to fungus and decay (associated standard) | IEC 62677-2 |

## Logistics data

| | |
|---|---|
| Delivery scope | Heat shrinkable end cap |
| Shelf life description | Unlimited shelf life |
| Country of origin | India |
| Customs tariff number | 39174000 |

| | | | | |
|---|---|---|---|---|
| EAN-UPC | 4010311048536 | | | |
| Base quantity | 1 | 1 | 10 | 10 |
| Base unit of measure | Piece | Piece | Piece | Piece |
| Alternate quantity | 1 | 1 | 1 | 1 |
| Alternative unit of measure | Piece | Bag1 | Bag | Pack |
| Lenght | 100 | 100 | 220 | 220 |
| Width | 88 | 88 | 160 | 160 |
| Height | 17 | 17 | 40 | 40 |
| Dimension unit | Millimetres | Millimetres | Millimetres | Millimetres |
| Volume | 0.15 | 0.15 | 1.408 | 1.408 |
| Volume unit | Cubic decimetres | Cubic decimetres | Cubic decimetres | Cubic decimetres |
| Gross weight | 0.003 | 0.003 | 0.035 | 0.035 |
| Net weight | 0.003 | 0.003 | 0.03 | 0.03 |
| Weight unit | Kilogram | Kilogram | Kilogram | Kilogram |