Vigilohm IFL12C, IFL12MC, IFL12LMC, and IFL12MCT

Insulation Fault Locator

User manual

7EN02-0406-06
03/2026

www.se.com

Legal Information

The information provided in this document contains general descriptions, technical characteristics and/or recommendations related to products/solutions.

This document is not intended as a substitute for a detailed study or operational and site-specific development or schematic plan. It is not to be used for determining suitability or reliability of the products/solutions for specific user applications. It is the duty of any such user to perform or have any professional expert of its choice (integrator, specifier or the like) perform the appropriate and comprehensive risk analysis, evaluation and testing of the products/solutions with respect to the relevant specific application or use thereof.

The Schneider Electric brand and any trademarks of Schneider Electric and its subsidiaries referred to in this document are the property of Schneider Electric or its subsidiaries. All other brands may be trademarks of their respective owner.

This document and its content are protected under applicable copyright laws and provided for informative use only. No part of this document may be reproduced or transmitted in any form or by any means (electronic, mechanical, photocopying, recording, or otherwise), for any purpose, without the prior written permission of Schneider Electric.

Schneider Electric does not grant any right or license for commercial use of the document or its content, except for a non-exclusive and personal license to consult it on an "as is" basis.

Electrical equipment should be installed, operated, serviced, and maintained only by qualified personnel. No responsibility is assumed by Schneider Electric for any consequences arising out of the use of this material.

Schneider Electric reserves the right to make changes or updates with respect to or in the content of this document or the format thereof, at any time without notice.

To the extent permitted by applicable law, no responsibility or liability is assumed by Schneider Electric and its subsidiaries for any errors or omissions in the informational content of this document, as well as any non-intended use or misuse of the content thereof.

Safety information

Important information

Read these instructions carefully and look at the equipment to become familiar with the device before trying to install, operate, service, or maintain it. The following special messages may appear throughout this manual or on the equipment to warn of potential hazards or to call attention to information that clarifies or simplifies a procedure.

The addition of either symbol to a “Danger” or “Warning” safety label indicates that an electrical hazard exists which will result in personal injury if the instructions are not followed.

This is the safety alert symbol. It is used to alert you to potential personal injury hazards. Obey all safety messages that accompany this symbol to avoid injury or death.

⚠⚠DANGER

DANGER indicates a hazardous situation which, if not avoided, **will result in** death or serious injury.

Failure to follow these instructions will result in death or serious injury.

⚠WARNING

WARNING indicates a hazardous situation which, if not avoided, **could result in** death or serious injury.

⚠CAUTION

CAUTION indicates a hazardous situation which, if not avoided, **could result in** minor or moderate injury.

NOTICE

NOTICE is used to address practices not related to physical injury.

Please note

Electrical equipment should be installed, operated, serviced, and maintained only by qualified personnel. No responsibility is assumed by Schneider Electric for any consequences arising out of the use of this equipment. A qualified person is one who has skills and knowledge related to the construction, installation, and operation of electrical equipment and has received safety training to recognize and avoid the hazards involved.

Notice

FCC

NOTE: Applicable for IFL12C, IFL12MC and IFL12MCT.

This equipment has been tested and found to comply with the limits for a Class A digital device, pursuant to Part 15 of the FCC rules. These limits are designed to provide reasonable protection against harmful interference when the equipment is operated in a commercial environment. This equipment generates, uses, and can radiate radio frequency energy and, if not installed and used in accordance with the instruction manual, may cause harmful interference to radio communications. Operation of this equipment in a residential area is likely to cause harmful interference in which case the user will be required to correct the interference at his own expense.

The user is cautioned that any changes or modifications not expressly approved by Schneider Electric could void the user's authority to operate the equipment.

This digital apparatus complies with CAN ICES-3 (A) /NMB-3(A).

Notice

FCC

NOTE: Applicable for IFL12LMC.

This equipment has been tested and found to comply with the limits for a Class B digital device, pursuant to part 15 of the FCC rules. These limits are designed to provide reasonable protection against harmful interference in a residential installation. This equipment generates, uses, and can radiate radio frequency energy and, if not installed and used in accordance with the instructions, may cause harmful interference to radio communications. However, there is no guarantee that the interference will not occur in a particular installation. If this equipment does cause harmful interference to radio or television reception, which can be determined by turning the equipment off and on, the user is encouraged to try to correct the interference by one or more of the following measures:

- Reorient or relocate the receiving antenna.
- Increase the separation between the equipment and receiver.
- Connect the equipment to an outlet on a circuit different from that to which the receiver is connected.
- Consult the dealer or an experienced radio/TV technician for help.

The user is cautioned that any changes or modifications not expressly approved by Schneider Electric could void the user's authority to operate the equipment.

This digital apparatus complies with CAN ICES-3 (B) /NMB-3(B).

About this manual

This manual discusses features of the Vigilohm IFL12C, IFL12MC, IFL12LMC, and IFL12MCT insulation fault locators and provides installation, commissioning, and configuration instructions.

This manual is intended for use by designers, panel builders, installers, system integrators, and maintenance technicians who are related with ungrounded electrical distribution systems featuring insulation monitoring devices (IMDs) with fault locating devices.

Throughout the manual, the term “device” refers to IFL12C, IFL12MC, IFL12LMC, and IFL12MCT. All differences between the models, such as a feature specific to one model, are indicated with the appropriate model number or description. Throughout the manual, the term “IMD” refers to IM400, IM400L, and IM400C.

This manual assumes you have an understanding of insulation monitoring and locating and are familiar with the equipment and power system in which your device is installed.

This manual does not provide instructions on how to incorporate device data or perform device configuration using energy management systems or software.

Please contact your local Schneider Electric representative to learn what additional training opportunities are available for your devices.

Make sure you are using the most up-to-date version of your device’s firmware in order to access the latest features.

The most up-to-date documentation about your device is available for download from www.se.com.

Related documents

Document	Number
Instruction Sheet: Vigilohm IFL12C, IFL12MC, IFL12LMC, and IFL12MCT Insulation Fault Locator	QGH34269
Commissioning Guide: Vigilohm IFL12C, IFL12MC, IFL12LMC, and IFL12MCT Insulation Fault Locator	7EN02-0416
Vigilohm Catalog	PLSED310020EN
The IT earthing system: a solution to improve industrial electrical network availability - Application guide	PLSED110006EN
System earthings in LV (The schematics of earth links in LV (neutral modes) Cahier technique n° 172)	CT172
The IT system earthing (unearthed neutral) in LV (The IT scheme (in isolated neutral) of the links to the earth in LV Cahier technique n° 178)	CT178

Supplemental information

This document should be used along with the instruction sheet included in the box with your device and accessories.

See your device’s instruction sheet for information related to installation.

See your product’s catalog pages at www.se.com for information about your device, its options, and accessories.

You can download updated documentation from www.se.com or contact your local Schneider Electric representative for the latest information about your product.

Table of Contents

Table of Contents 7
Safety precautions 9
Introduction 10
- Ungrounded power system overview 10
- Insulation resistance (R) monitoring 10
- Leakage capacitance (C) monitoring 10
- Device overview 11
- Hardware overview 12
- Accessories 12
- Device configuration and analysis tools 14

Application 16
- Locating the insulating alarm with IMD 16
- Locating the insulating alarm with IMD, where device and IMD are connected to an external network 17
- Locating the insulating alarm with IMD, where device and IMD are connected to communication network 18

Human Machine Interface (HMI) 19
- Device menu 19
- Display interface 20
- Navigation buttons and icons 20
- Information icons 21
- Status screens 23
- Parameter modification using the display 27

Function 29
- Commissioning 29
  - Automatic commissioning 30
  - Manual commissioning 30
  - Checking wiring connection 31
- IM400 Configuration 32
- General configuration 32
  - Date/Time 32
  - Password 33
  - Language 33
  - Identification 33
  - Display 34
- Network configuration 34
  - Application (**App**) 34
  - **Frequency** 35
  - **Filtering** 35
  - Voltage adaptor (**V. Adapt**) 36
  - **Channel Name** 36
- Alarm configuration 38
  - Insulation alarm (**Ins. Alarm**) thresholds 38
  - Insulation alarm time delay (**Ins. Al. Delay**) 39
- I/O configuration 40
  - Insulation alarm relay (**Ins. Al. Relay**) 40
  - Insulation alarm relay acknowledgement (**Ack Al. Relay**) 41

Test with relays (**Test w. Relays**) 42
R and C measurements 42
Insulation measurements 42
Effect of leakage capacitance and frequency disturbances on the measurement accuracy of R 42
Monitoring system insulation 42
Log 43
Trends 44
Reset 45
Auto-test 46
Communication 48
Communication parameters 48
Modbus functions 48
Modbus register table format 49
Modbus registers table 49
Alarm event records 59
Date and time (TI081 format) 60
Maintenance 62
Safety precautions 62
Product status light indicator 62
Troubleshooting 62
Functional safety standards compliance 64
Safety standards compliance requirements 64
Product installation and wiring 65
Commissioning for functional safety standards compliance 66
Specifications 68
China Standard Compliance 70

Safety precautions

Installation, wiring, testing and service must be performed in accordance with all local and national electrical codes.

Safety measures

⚠⚠DANGER

HAZARD OF ELECTRIC SHOCK, EXPLOSION, OR ARC FLASH

- Apply appropriate Personal Protective Equipment (PPE) and follow safe electrical work practices. See NFPA 70E, CSA Z462 or other local standards.
- Turn off all power supplying this device and the equipment in which it is installed before working on or in the equipment.
- Always use a properly rated voltage sensing device to confirm that all power is off.
- Assume communications and I/O wiring are hazardous live until determined otherwise.
- Do not exceed the maximum ratings of this device.
- Disconnect all the device's input and output wires before performing dielectric (hi-pot) or Megger testing.
- Never shunt an external fuse or circuit breaker.
- Ensure that your ungrounded system has a compatible insulation monitoring device.

Failure to follow these instructions will result in death or serious injury.

NOTE: See IEC 60950-1, Annex W for more information on communications and I/O wiring connected to multiple devices. See IEC 60364-4-41 for more information on protection against electrical shock.

⚠WARNING

UNINTENDED OPERATION

Do not use this device for critical control or protection of persons, animals, property or equipment.

Failure to follow these instructions can result in death, serious injury, or equipment damage.

NOTICE

EQUIPMENT DAMAGE

- Do not open the device case.
- Do not attempt to repair any components of the device.

Failure to follow these instructions can result in equipment damage.

Introduction

Ungrounded power system overview

Ungrounded power system is an earthing system, which increases continuity of service of power systems and protection of people and property.

This system must be monitored with specific device to meet specific applications, such as hospital, naval applications and others where safety and continuity of service must be ensured even in case of earth fault. Lastly, this system is chosen in certain cases because it can facilitate preventive and corrective maintenance operations.

The system transformer's neutral is isolated from earth, while the electrical load frames are earthed. First fault occurs there is no loop for shorting current to flow, allowing the system to continue to operate normally without hazard to people and equipment. However, the faulty circuit must be detected and repaired before a second fault occurs. Because this system can tolerate an initial fault, maintenance operations have to be conducted as soon as possible to prevent the system trip in case a second earth fault occurs.

Insulation resistance (R) monitoring

Ungrounded power system require insulation monitoring to identify when the first insulation fault has occurred.

The installation must either be ungrounded or must be grounded through the specific ZX impedence (Commercial Reference: 50159).

In the event of only one earth fault, the fault current is very low and interruption is unnecessary. However, given that a second fault could potentially cause the circuit breaker to trip, an IMD has to be installed to indicate the initial fault. The device installed along with IMD detects the initial fault on the particular channel where the fault occurred. This device triggers an audible and/or a visual signal.

By constantly monitoring the insulation resistance, you can keep track of the system quality, which is a form of preventive maintenance. Further, monitoring the insulation resistance of individual channels, you can keep track of the individual channel quality.

Leakage capacitance (C) monitoring

Ungrounded power systems is adversely affected by leakage capacitance.

Ungrounded power system must meet the following conditions to ensure protection from indirect contact:

$R_A \times I_d \leq 50$ V AC and $R_A \times I_d < 120$ V DC

- R_A is the resistance value of the equipment grounding connection, in Ohms.
- I_d is the ground fault current, in Amps.
- 50 V is the maximum acceptable voltage for indirect contacts.

For a three-phase ungrounded power system, the indirect contact fault current I_d is:

$I_d = 2\pi \times F \times C \times V$

- F is the frequency of the power system.
- C is the earth leakage capacitance.
- V is the phase-to-neutral voltage.

Combining these, the ungrounded power system must meet the following condition:

$2\pi \times F \times C \times V \times R_A \leq 50\ V$

It is important that the equipment grounds have low resistance, and that the ungrounded power system leakage capacitance must be monitored and kept to a low value.

For more information, see Cahier Technique No. 178.

Device overview

The device is a digital insulation fault locator (IFL) for low-voltage ungrounded power systems. An insulation monitoring device (IMD) must be connected to the ungrounded system where the device is connected. The device along with IMD locates the first fault and signals fault as alarm.

IMD monitors the insulation resistance of the system by injecting a signal. This technique is used for all power system types - AC, DC, combined, rectified, with a variable speed drive, etc. The device is connected to the channels of the system using Toroid. The device uses the injected signal from the IMD to monitor the individual channel circuits' insulation resistance. The device alerts when one or more of the monitored channels resistance is lower than the defined threshold and identifies the faulty channels. The device also provides local channel resistance values, which is used for more precise monitoring of individual channels within the system for the purposes of preventative maintenance.

The device offers the following features:

- Fault location up to 12 channels
- Fast fault location (time < 5 s)
- Dedicated commissioning mode for quick installation verification
- Auto-detects and configures compatible toroids in commissioning mode
- Configurable filtering
- Detection of insulation faults in accordance to the configured threshold
- Transient fault indication
- Relay for fault indication
- Communication via Modbus RS-485 protocol
- Configurable channel name
- Configurable insulation thresholds common to all channels (low, medium, and high) (1)
- Configurable insulation threshold per channel (2)
- Configurable insulation alarm time delay per channel (2)
- Insulation resistance display (R) (2)
- Leakage capacitance display (C) with associated impedance (Zc) (2)
- Insulation fault log (2)
- Trends of the insulation resistance (2)

(1) Applicable for IFL12C
(2) Applicable for IFL12MC, IFL12LMC, and IFL12MCT

Hardware overview

Vigilohm IFL12MC / IFL12LMC / IFL12MCT and IFL12C feature 5 and 4 terminal blocks respectively.

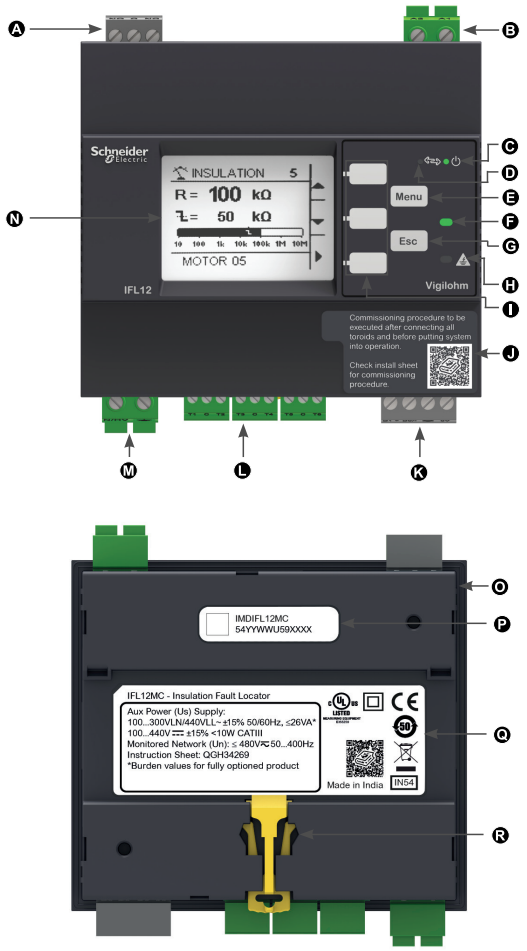

A	Alarm relay
B	Auxiliary power supply
C	Product status LED
D	Communication LED
E	Menu button
F	No alarm LED
G	Esc button
H	Alarm LED
I	3 contextual menu buttons
J	Label **NOTE:** Scan the QR code to view the device documentation: QR code link
K	RS-485 communication
L	12 toroid connections
M	Voltage input (3)
N	LCD screen
O	Gasket
P	Commercial reference and manufacturing data
Q	Specification Label **NOTE:** Scan the QR code to view the device documentation: QR code link
R	DIN mounting clip

Device commercial reference

Model	Commercial reference
IFL12C	IMDIFL12C
IFL12MC	IMDIFL12MC
IFL12LMC	IMDIFL12LMC
IFL12MCT	IMDIFL12MCT

Accessories

Accessories are required depending on the type of installation on which the device is installed.

(3) Applicable for IFL12MC, IFL12LMC, and IFL12MCT

Accessories list

Accessory	Catalog number
Cardew C “440 V” surge limiter	50171
Cardew C “660 V” surge limiter	50172
Cardew C “1000 V” surge limiter	50183
Cardew C base (4)	50169
PHT1000 voltage adaptor	50248
IFL12VA1T voltage adaptor	IMDIFL12VA1T
Toroid	Refer Vigilohm catalog

Cardew C surge limiter

<table>
<tr><td>Function</td><td colspan="4">Cardew C is used if the device along with the IMD is connected to the secondary connection of an MV/LV transformer (according to the rules and conventions that apply in the various countries).

It protects the low-voltage (LV) installation against over voltage hazards. It is connected to the secondary connection of the transformer. Cardew C can be used on the following systems:
• U < 1000 V AC
• U < 300 V DC</td></tr>
<tr><td rowspan="5">Selection table</td><td colspan="2">Un: Nominal Phase-to-Phase Voltage of AC System</td><td rowspan="2">Ui: Arcing Voltage</td><td rowspan="2">Type of Cardew C</td></tr>
<tr><td>Accessible neutral</td><td>Not accessible neutral</td></tr>
<tr><td>380 V < U ≤ 660 V</td><td>220 V < U ≤ 380 V</td><td>700 V < Ui ≤ 1,100 V</td><td>440 V</td></tr>
<tr><td>660 V < U ≤ 1,000 V</td><td>380 V < U ≤ 660 V</td><td>1,100 V < Ui ≤ 1,600 V</td><td>660 V</td></tr>
<tr><td>1,000 V < U ≤ 1,560 V</td><td>660 V < U ≤ 1,000 V</td><td>1,600 V < Ui ≤ 2,400 V</td><td>1,000 V</td></tr>
<tr><td>Dimensions</td><td colspan="4"> 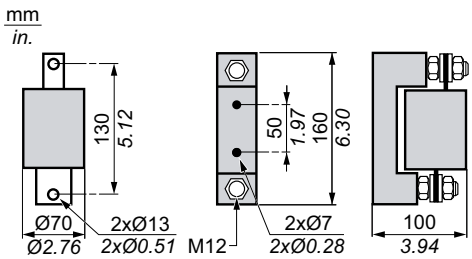
</td></tr>
<tr><td>Mounting</td><td colspan="4">• Cardew C mounted directly on busbars
• Mounting with plate-mounted base</td></tr>
<tr><td>Connection</td><td colspan="4">Refer to the instruction sheet for wiring information.</td></tr>
</table>

(4) Compatible with all Cardew C catalog numbers

Voltage adaptor

The optional voltage/ground adaptors are PHT1000 and IFL12VA1T.

Function	The voltage adaptors PHT1000 and IFL12VA1T are used to connect IMD and the device respectively to ungrounded systems higher than 480 V AC. The wire connecting voltage adaptor to IMD and the device has to have the same voltage rating as the monitored network.	
Dimensions	IFL12VA1T 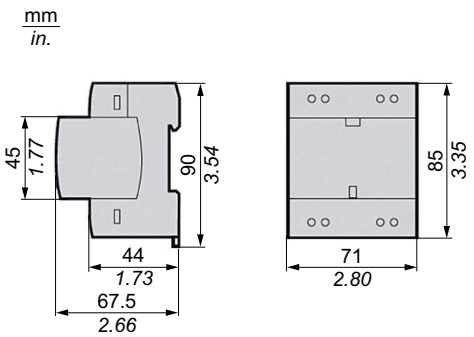 	PHT1000 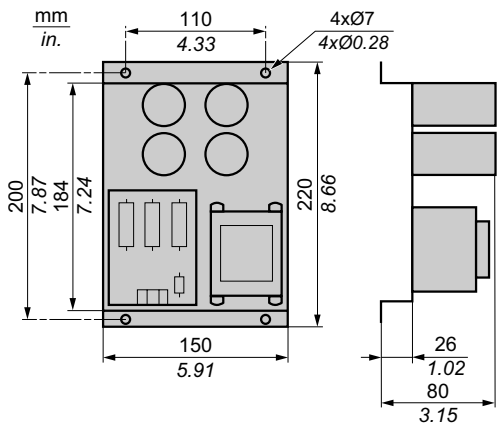
Mounting	On DIN rail	On mounting plate
Connection	Refer to the instruction sheet for wiring information.	

Toroids

The toroids are used to connect the device to the channels of the system, which can be monitored. The compatible toroids are:

- TA30
- PA50
- IA80
- MA120
- SA200
- GA300
- TOA80
- TOA120

Refer to the Vigilohm catalog for the most up to date listing of compatible devices. Refer to the toroid user guide for specifications.

Device configuration and analysis tools

ION Setup

ION Setup is a device configuration and verification tool.

ION Setup communicates with the device on the network and provides the basic configuration, which can be done via HMI and also advanced configuration, such as firmware upgrade and other features.

See ION Setup for latest version and instruction to install the tool and to add your device.

Ecoreach

Ecoreach is a software solution to configure and commission the smart device.

Ecoreach communicates with the device on the network and provides the following features:

- Automatic device discovery
- Device Check up & Control
- Firwmare upgrade

See Ecoreach for instruction to install the solution and to add your device.

Power Monitoring Expert

EcoStruxure™ Power Monitoring Expert is a complete supervisory software package for power management applications.

The software collects and organizes data gathered from your facility's electrical network and presents it as meaningful, actionable information using an intuitive web interface.

Power Monitoring Expert communicates with devices on the network to provide:

- Real-time monitoring through a multi-user web portal
- Trend graphing and aggregation
- Power quality analysis and compliance monitoring
- Pre-configured and custom reporting

See the EcoStruxure™ Power Monitoring Expert online help for instructions on how to add your device into its system for data collection and analysis.

Power SCADA Operation

EcoStruxure™ Power SCADA Operation is a complete real-time monitoring and control solution for large facility and critical infrastructure operations.

It communicates with your device for data acquisition and real-time control. You can use Power SCADA Operation for:

- System supervision
- Real-time and historical trending, event logging
- PC-based custom alarms

See the EcoStruxure™ Power SCADA Operation online help for instructions on how to add your device into its system for data collection and analysis.

Gateways and supervision

The device is compatible with the gateways and supervision products.

The compatible gateway products are:

- PAS600

  See PAS600 Product Information for more information..
- PAS800

  See PAS800 Product Information for more information.

Device is part of Ecostruxure Power Monitoring Expert (PME) ecosystem. See Power Monitoring Expert for more information.

Application

This section explains the following examples of the insulation fault location application for ungrounded power system:

- Locating the insulating alarm with IMD
- Locating the insulating alarm with IMD, where device and IMD are connected to an external network
- Locating the insulating alarm with IMD, where device and IMD are connected to communication network

Locating the insulating alarm with IMD

You can use the device to locate the insulating alarm of an ungrounded power system with IMD.

IMD is powered by the ungrounded power system that it monitors. IMD is connected to neutral (or to one phase) and ground. The device is connected to the toroids. Toroids are connected to the channels of the system.

IMD monitors the insulation of the system. The device locates the channel where the insulation fault occurs. The device has a single relay output to control a light or a buzzer.

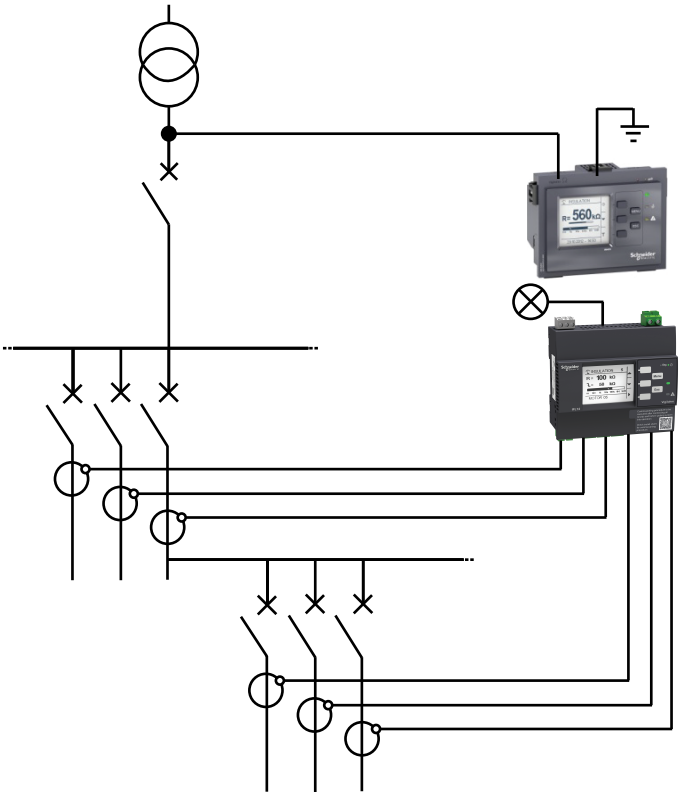

Locating the insulating alarm with IMD, where device and IMD are connected to an external network

You can use the device to locate the insulating alarm of an ungrounded power system with IMD connected to an external network.

IMD is powered by the ungrounded power system that it monitors. IMD is connected to neutral (or to one phase) and ground. The device is connected to the toroids. Toroids are connected to the channels of the system.

IMD monitors the insulation of the system. The device locates the channel where the insulation fault occurs. IMD insulation alarm output and the device alarm output are connected to an available input on a networked device (Power Meter or PLC, for example). The networked device is connected to a supervisor via a communication network.

NOTE: In this example, only the fault information is available to the supervisor.

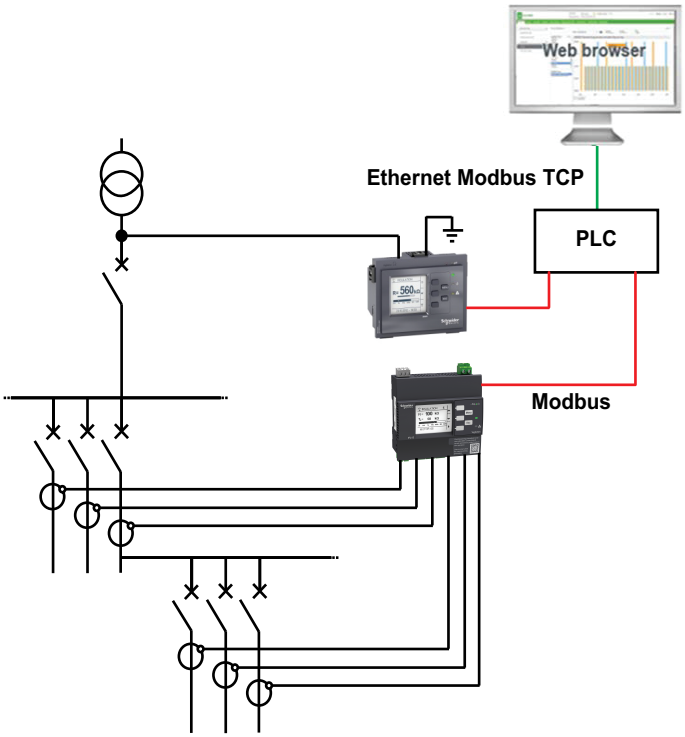

Locating the insulating alarm with IMD, where device and IMD are connected to communication network

You can use the device to locate the insulating alarm of an ungrounded power system with IMD connected to communication network.

IMD is powered by the ungrounded power system that it monitors. IMD is connected to neutral (or to one phase) and ground. The device is connected to the toroids. Toroids are connected to the channels of the system.

IMD monitors the insulation of the system. The device locates the channel where the insulation fault occurs. IMD and the device are connected to a supervisor via Modbus communication. This application can support the following actions from the supervisor level:

- Display:
  - Product status
  - All the channels insulation alarm (active and acknowledged)
  - Details of the last 240 time-tagged events (5)
  - Values for R and C to create tables or curves for monitoring these values over variable periods (5)
- Configuring the product remotely: all the settings can be accessed remotely

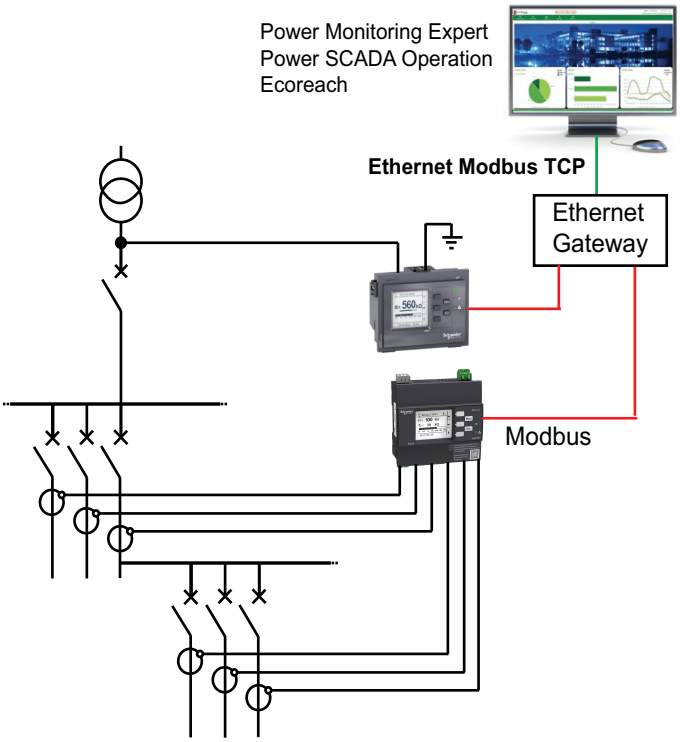

(5) Applicable for IFL12MC, IFL12LMC, and IFL12MCT

Human Machine Interface (HMI)

Device menu

Using the device's display, you can navigate through the different menus to perform basic setup on your device.

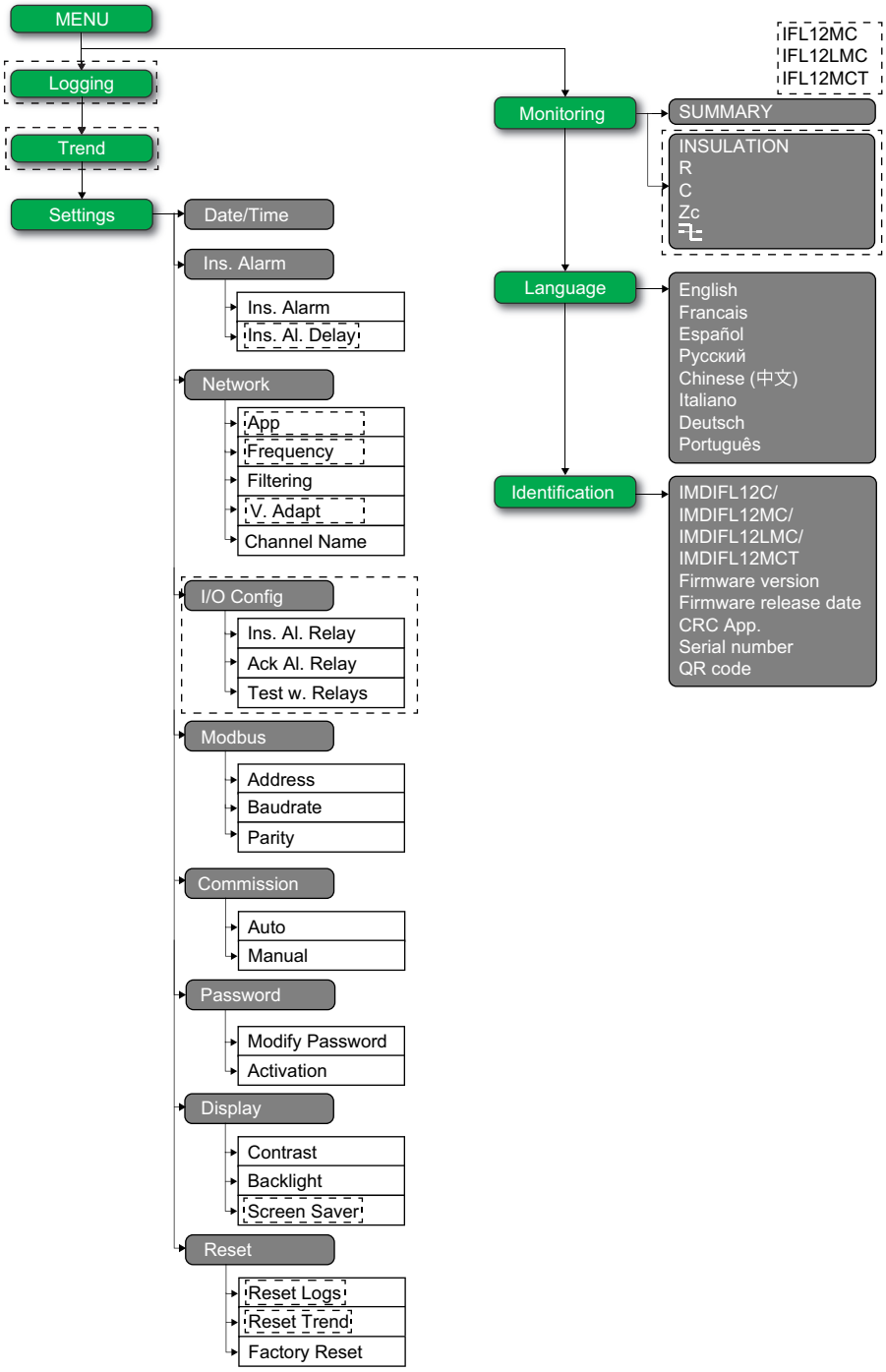

Display interface

Use the device display to perform various tasks such as configuring the device, displaying status screens, acknowledging alarms, or viewing events.

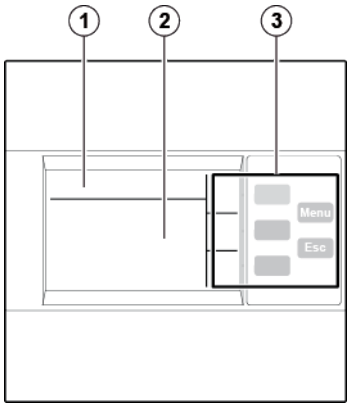

1	Screen identification area containing a menu icon, and the name of the menu or the parameter
2	Information area displaying information specific to the screen (measurement, insulation alarm, settings)
3	Navigation buttons

Navigation buttons and icons

Use the display buttons to navigate through menus and perform actions.

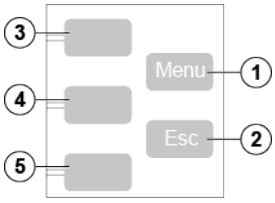

Legend	Button	Icon	Description
1	**Menu**	–	Display the level 1 menu (**Menu**).
2	**Esc**	–	Go back to the previous level.
3	Contextual menu button 3		Scroll up the display or move to the previous item in a list.
			Access the date and time setting. If the clock icon flashes, it means that the Date/Time parameter needs to be set.
			Increase a numerical value. Modify the selected character
			Select all channels to set same value of insulation alarm threshold and alarm delay. (6) Select all channels to perform manual commission.
			Select each channel to set value of insulation alarm threshold and alarm delay. (6) Select each channel to perform manual commission.
4	Contextual menu button 2		Scroll down the display or move to the next item in a list.

(6) Applicable for IFL12MC, IFL12LMC, and IFL12MCT

Legend	Button	Icon	Description
			Move one digit to the left within a numerical value. If the digit on the far left is already selected, pressing the button loops you back to the digit on the right.
			Move from one character to the right of the one that is currently selected, or to loop back to the character on the left. Move from one channel to another channel to set value of insulation alarm threshold and alarm delay and to select channel for manual commissioning.
5	Contextual menu button 1		Validate the selected item. Acknowledge the transient alarm.
			Run the auto-test manually.
			Go to a menu or submenu, or edit a parameter.
			Acknowledge the insulation alarm.
			Go to insulation resistance display. (7) Exit automatic commissioning mode.
			NOTE: This icon is applicable for IFL12MC, IFL12LMC,and IFL12MCT. Go to capacitance display.

Information icons

Icons in the information area of the LCD display provide information such as what menu is selected and the insulation alarm status.

Icon	Description
	Main menu
	• System resistance (in the absence of an insulation fault) • Measurement parameters menu • Monitoring menu • System impedance • System resistance as primary record in Logging page
	Fault log menu
	Trend menu
	Setting parameters menu and submenu
	Display language selection menu
	Product identification
	• Indication of an insulation alarm • Indication of a transient alarm • Indication of product status • Indication of channel status
	Summary
✓	No alarm

(7) Applicable for IFL12MC, IFL12LMC, and IFL12MCT

Icon	Description
	Alarm **NOTE:** For transient alarms, this icon flashes.
	Toroid disconnect
	Date/Time parameters menu
	Insulation alarm parameters menu
	Network parameters menu
	I/O configuration parameters menu
	Modbus parameters menu
	Commission parameters menu
	Password parameters menu
	Display parameters menu
	Reset parameters menu

Status screens

Summary

The default screen shows the summary screen. This screen displays uncommissioned channels, commissioned channels, and insulation status of the commissioned channels.

NOTE: The following examples are applicable for IFL12MC, IFL12LMC, and IFL12MCT.

An example of all 12 commissioned channels with out insulation alarm is as follows:

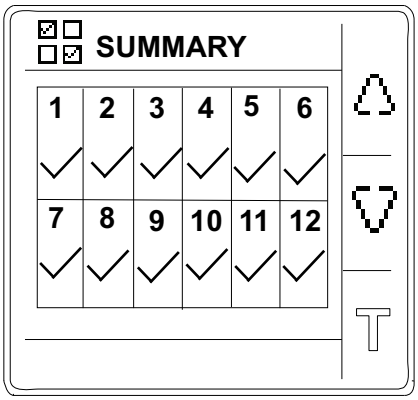

An example of 12 commissioned channel and 3 channels (channel number : 2, 6, and 10) displaying insulation alarm is as follows:

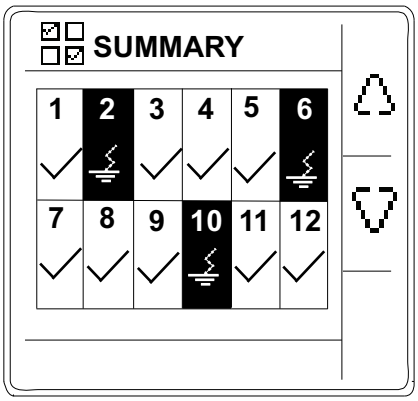

An example of 12 commissioned channel and 3 channels (channel number : 2, 6, and 10) displaying acknowledged insulation alarm is as follows:

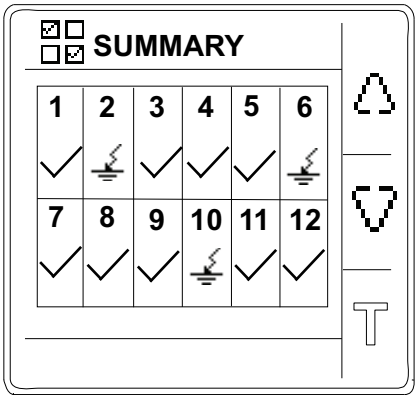

NOTE: The following examples are applicable for IFL12C.

An example of all 12 commissioned channels is as follows:

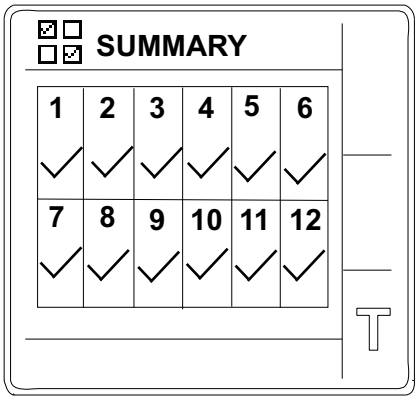

NOTE: The following examples are applicable for IFL12C, IFL12MC, IFL12LMC, and IFL12MCT.

An example of 12 commissioned channel and 3 channels (channel number : 2, 6, and 10) displaying toroids disconnect alarm is as follows:

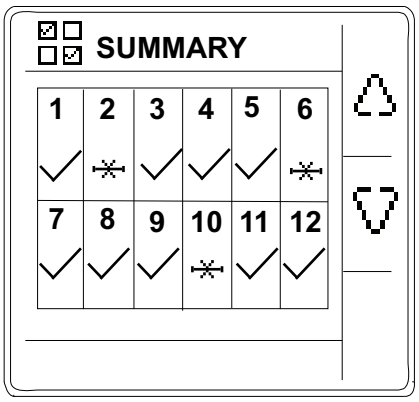

Insulation resistance measurement (R)

NOTE: Applicable for IFL12MC, IFL12LMC, and IFL12MCT.

The device displays the insulation resistance measurement of each individual channel. An example measurement of channel 4 is as follows:

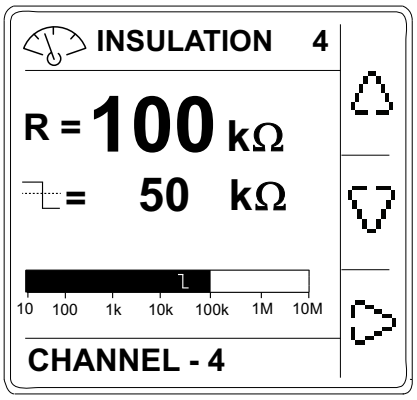

Impedance measurement (Z)

NOTE: Applicable for IFL12MC, IFL12LMC, and IFL12MCT.

The device displays the impedance measurement of each individual channel. An example measurement of channel 4 is as follows:

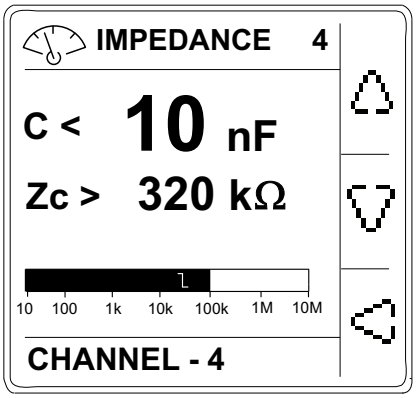

Insulation alarm detected: insulation fault

NOTE: Applicable for IFL12MC, IFL12LMC, and IFL12MCT.

The device displays the insulation fault screen when the insulation value falls below the insulation alarm threshold. An example of insulation alarm of channel 4 is as follows:

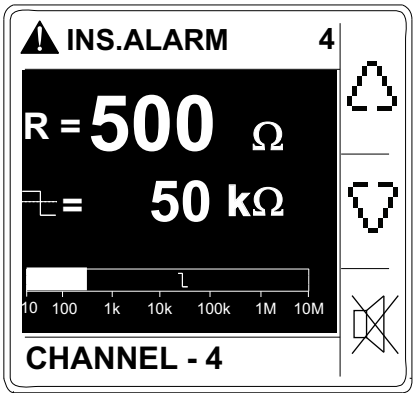

There are two possible scenarios:

- Acknowledge the insulation alarm by pressing the button.
- If you do not acknowledge the insulation alarm and the system insulation returns to a value above the insulation alarm threshold, the screen displays transient fault.

Insulation alarm acknowledged

NOTE: Applicable for IFL12MC, IFL12LMC, and IFL12MCT.

This screen is displayed when you have acknowledged the insulation alarm. An example of insulation alarm acknowledged of channel 4 is as follows:

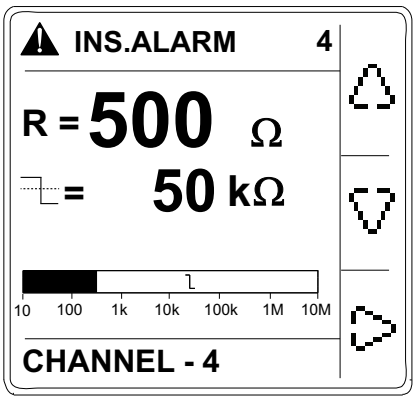

Transient fault

NOTE: Applicable for IFL12MC, IFL12LMC, and IFL12MCT.

This screen is displayed when a transient fault has occurred. An example of transient alarm of channel 4 is as follows:

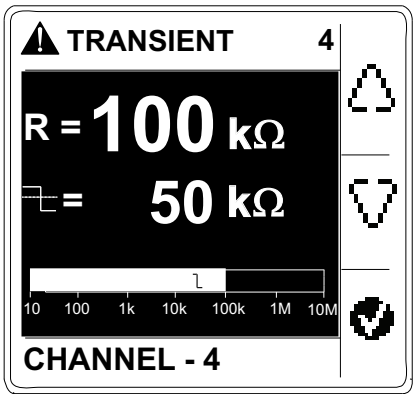

Acknowledge the transient fault by pressing the button.

NOTE: Applicable for IFL12MC and IFL12MCT in M-RW-PV mode only.

This screen is displayed when a transient fault has occurred. An example of transient alarm of channel 2 is as follows:

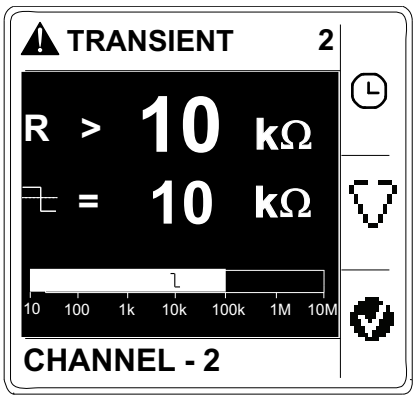

Acknowledge the transient fault by pressing the button.

Locating signal unavailable

NOTE: Applicable for IFL12MC, IFL12LMC, IFL12MCT.

This screen appears when the connection to the voltage input is broken or opened. Below is an example of the 'Locating signal unavailable' error displayed on the device.

NOTE: If the Locating Signal Unavailable (LSU) error persists despite correct voltage input connections, please check for multiple Frank faults (very low resistance faults) in the feeders or check the upstream IM400 by.

- Disabled injection
- Injection inhibition
- Inoperative product

Parameter modification using the display

To modify the values, you must be thoroughly familiar with the interface menu structure and general navigation principles.

For more information about how the menus are structured, see Device menu, page 19.

To modify the value of a parameter, follow either of these two methods:

- Select an item (value plus unit) in a list.
- Modify a numerical value, digit by digit and character value.

For the following parameters, the numerical value can be modified:

- Date
- Time
- Password
- Modbus address
- Toroid turns [8]

For **Channel Name** parameter, the character value can be modified.

Selecting a value in a list

To select a value in a list, use the up and down menu buttons to scroll through the parameter values until you reach the desired value, then press to confirm the new parameter value.

Modifying a numerical value

The numerical value of a parameter is made up of digits and the one on the far right is selected by default. To modify a numerical value, use the menu buttons as follows:

- to modify the selected digit.
- to select the digit to the left of the one that is currently selected, or to loop back to the digit on the right.
- to confirm the new parameter value.

Modifying a character value

The character value of a parameter is made up of character and the one on the far left is selected by default. To modify a character value, use the menu buttons as follows:

(8) Applicable for IFL12MC, IFL12LMC, and IFL12MCT

- to modify the selected character.
- to select the character to the right of the one that is currently selected, or to loop back to the character on the left.
- to confirm the new parameter value.

Saving a parameter

After you have confirmed the modified parameter, one of following two actions occur:

- If the parameter has been saved correctly, the screen displays **Saved** and then returns to the previous display.
- If the parameter has not been saved correctly, the screen displays **Error** and the editing screen remains active. A value is deemed to be out of range when it is classed as forbidden or when there are several interdependent parameters.

Canceling an entry

To cancel the current parameter entry, press the **Esc** button. The previous screen is displayed.

Function

Commissioning

The device must be commissioned so that the device can detect toroids and identify the insulation fault in the respective toroids.

Performing commissioning is mandatory when you:

- Install a new device
- Install one or more toroid to an installed device
- Remove one of more toroid from an installed device
- Replace the toroid with a different type. (Example: Replace TA30 type by PA50 type)
- Replace the device

Performing commissioning is not required when you reconnect or replace a toroid with the same type of toroid.

The device offers the following commissioning modes:

- Automatic
- Manual

Automatic commissioning

1. At first power up or factory reset, the device displays **Detecting Toroid** message with a percentage progress bar.

   NOTE: At first power up or factory reset, the device performs automatic commissioning.

   - If toroid is detected, the **Commissioning** screen displays. This screen shows the status of commissioning. The following table provides the information of the various displays of commissioning grid.

HMI Display	Information
4	Commissioned channel 4
4	Non-commissioned channel 4
4	Commissioned channel 4 with insulation fault

   NOTE: Channel 4 is provided as an example. The displays are applicable for all 12 channels.

   NOTE: If you have connected a toroid which is not one of the recommended toroids, then the device should be manually commissioned. See Manual commissioning, page 30. Refer to the Vigilohm catalog for the most up to date listing of compatible toroids.

   - If toroid is not detected, the **No toroid** message displays. Perform one of the following action:
     - Check if the toroid is properly connected and navigate to **Menu > Settings > Commission > Auto**. The device performs automatic commissioning.
     - The connected toroid is not one of the recommended toroids. The device should be manually commissioned. See Manual commissioning, page 30.

       NOTE: Refer to the Vigilohm catalog for the most up to date listing of compatible toroids.

2. You can check the wiring of the system. To check, see Checking wiring connection, page 31. If you do not want to check, ignore this step and continue to next step.

3. Press button to exit the commissioning mode.

   NOTE: The device automatically exits commissioning mode after one hour if manual exit is not performed.

   The device displays **Summary** screen and the clock icon flashes to show that date and time needs to be set.

   NOTE: If you have connected a new toroid or replaced a toroid, navigate to **Menu > Settings > Commission > Auto**. The device performs automatic commissioning.

Manual commissioning

The device must be manually commissioned if the connected toroid is not one of the recommended toroids.

NOTE: Refer to the Vigilohm catalog for the most up to date listing of compatible toroids.

1. Navigate to **Menu > Settings > Commissioning > Manual**.

   The **Manual** screen displays with the channel grid and a flashing dot on the channel 1 grid. This indicates the channel 1 is selected.

2. Perform any one of the following:

   - To commission channel 1, press button.
   - To commission other channels, press button to navigate to the desired channel and press button.
   - To commission all channels, press button and press button.

   The **Toroid Turns** screen displays.

3. Set the toroid turns (Allowed values: 300 to 3000) and press the button. To set the toroid turns, see Parameter modification using the display, page 27.
   - If the turn ratio is valid, the **Saved** message displays.
   - If the turn ratio is not valid, the **Error** message displays. Select the correct turn ratio.

4. Press **Esc** button.

   The **Manual** screen displays with the channel grid and a flashing dot on the channel 1 grid. This indicates the channel 1 is selected.

5. Perform Step 2 and Step 4 for other non commissioned channels.

Checking wiring connection

You can check the wiring of the system once the toroid has been commissioned. Performing this check successfully confirms that the wiring of the device is proper and the device is ready to use.

You can perform any of the following checks:

- You can induce one dummy fault on one channel. You can perform this check for all channels sequentially.
  1. Induce a dummy fault on one of the channel.

     The device displays the insulation alarm on the detected channel, the **alarm LED** turns **ON**, and the **no alarm LED** turns **OFF**.
  2. Recover the dummy fault on the channel.

     The device returns to toroid detected state, the **alarm LED** turns **OFF**, and the **no alarm LED** turns **ON**.

- You can induce two dummy faults simultaneously on two channels.
  1. Induce a dummy fault on one of the channel.

     The device displays the insulation alarm on the detected channel, the **alarm LED** turns **ON**, and the **no alarm LED** turns **OFF**.
  2. Induce a dummy fault on the other channel.

     The device displays the insulation alarm on both the detected channels, the **alarm LED** remains **ON**, and the **no alarm LED** remains **OFF**.

     NOTE: If both the induced dummy faults are zero-impedance fault, then the device displays the insulation alarm on any one of the channel.
  3. Recover the dummy fault on one of the channel.

     The insulation alarm on this channel is recovered. Because the dummy fault still exist on other channel, the device displays the insulation alarm on the other channel, the **alarm LED** remains **ON**, and the **no alarm LED** remains **OFF**.
  4. Recover the dummy fault on other channel.

     The device returns to toroid detected state, the **alarm LED** turns **OFF**, and the **no alarm LED** turns **ON**.

  NOTE: You are strongly advised not to induce more than one zero-impedance dummy fault.

IM400 Configuration

You need to perform IM400 configuration to enable the device to work as expected.

Perform the following network settings on the IM400 (based on firmware version) to enable compatibility with the device:

NOTE: You need to perform these settings again when you perform factory reset on the IM400.

1. Select **Menu > Settings > Network**.
2. Set the value for the following network parameters and save:

Parameter	**Value**		
	Firmware Version		
	< 3.2.0	**≤ 3.2.3**	**≥ 3.2.4**
App	**Power C.** or **Control C.**	**Power C.** or **Control C.**	**Power C.** or **Control C.** or **M-RW-PV** (9)
Locating	**OFF**	**IFL12**	**IFL12**
V. Adapt	**None** or **PHT1000**	**None** or **PHT1000**	**None** or **PHT1000**
Injection	**Std**	<Not applicable>	<Not applicable>

NOTE: See IM400 user manual for information on modifying parameters.

General configuration

Date/Time

The date/time must be set:

(9) Applicable for IM400C

- On first power up.
- Whenever factory reset is performed.
- Whenever the power supply is interrupted.
- When switching between summer and winter time and vice versa.

If the auxiliary power supply is interrupted, the device retains the date and time setting from immediately before the interruption. The device uses the date and time parameter to time-tag the system insulation faults recorded. The date is displayed in the format: dd/mm/yyyy. The time is displayed using the 24-hour clock in the format: hh/mm.

After commissioning, go to settings on the **Menu** screen to indicate that the clock needs to be set. To set the date and time, see Parameter modification using the display, page 27.

Password

You can set a password to limit access to configuration of the device parameters to authorized personnel only.

When a password is set, the information displayed on the device can be viewed but the parameter values cannot be edited. By default, the password protection is not activated. The default password is **0000**. You can set a 4-digit password from **0000** to **9999**.

To activate the password, navigate to **Menu > Settings > Password > Activation** and select **ON**.

To modify the password, navigate to **Menu > Settings > Password > Modify Password** and edit the new password. To modify the parameter value, see Parameter modification using the display, page 27.

Language

The device supports 8 languages for HMI display.

The list of languages supported by the device HMI are as follows:

- English (Default)
- French
- Spanish
- Russian
- Chinese
- Italian
- German
- Portuguese

To set the language, navigate to **Menu > Language**. To modify the parameter value, see Parameter modification using the display, page 27.

Identification

You can view the information about the device on the **Identification** screen.

The **Identification** screen displays the following information:

- Commercial reference
- Firmware version
- Firmware release date

- CRC App
- Serial number
- QR code

  NOTE: Scan the QR code to view the Vigilohm products webpage.

To view the **Identification** screen, navigate to **Menu > Identification**.

Display

You can set the contrast and backlight and enable screen saver for the display.

You can access the device display parameters by selecting **Menu > Settings > Display**.

The display parameters and its allowed and default values are as follows:

Parameter	Default value	Allowed values
Contrast (10)	**50 %**	**10 %** to **100 %**
Backlight (10)	**100 %**	**10 %** to **100 %**
Screen Saver (11)	**OFF**	• **ON** If you select this value, the display turns OFF after 5 minutes of inactivity. If you press any button or on any fault, the display turns ON. • **OFF**

To modify the parameter value, see Parameter modification using the display, page 27.

Network configuration

You can configure the electrical network parameters to suit the electrical applications you want to monitor.

You can access the device network parameters by selecting **Menu > Settings > Network**.

The network parameters are:

- **App**
- **Filtering**
- **Frequency**
- **V.Adapt**
- **Channel Name**

The parameters **App**, **Frequency**, and **V.Adapt** are not applicable for IFL12C.

To modify the parameter value, see Parameter modification using the display, page 27.

Application (App)

Applicable for IFL12MC, IFL12LMC, and IFL12MCT.

The device is designed and tested to be compliant with different applications, which can be monitored. The device is compliant with the following applications:

(10) Applicable for IFL12C, IFL12MC, IFL12LMC, and IFL12MCT
(11) Applicable for IFL12MC, IFL12LMC, and IFL12MCT

- Power circuits: industrial or marine applications that contain power loads and power electronics such as speed drives, inverters, or rectifiers.
- Control circuits: auxiliary control circuits used to drive power systems. These circuits contain sensitive loads such as PLCs, IOs, or sensors.
- MRW: Marine or Railways application.

Accordingly, set appropriately:

Parameter Value	Application
Power C. (Default)	Power circuits
Control C.	Control circuits
MRw. (12)	Marine or Railways application

NOTE: Ensure that the selected parameter value is same as IMD network parameter value. For example, if you select **Power C.** in the device, make sure that in IMD, the **App** value is also set to **Power C.**. If the values are not same, the device might not work as expected.

If you select **MRw.** in the device, make sure that in IMD, the **App** value is also set to **M-RW-PV**. If the values are not same, the device might not work as expected.

Frequency

Applicable for IFL12MC, IFL12LMC, and IFL12MCT.

You can set the rated frequency of the monitored application.

- **50 Hz** (by default)
- **60 Hz**
- **400 Hz**
- **DC**

Filtering

You can set the filtering parameter as per the monitored application.

This parameter is used to smooth out values of insulation measures that always depend on equipment operating on the application. The criteria are:

- Number of loads
- Type of loads
- Size of the system (effects capacitance)
- Load switching

The device is designed to provide accurate insulation resistance and capacitance measurement on highly disturbed systems with power electronic devices.This features improves the measurement stability to avoid display fluctuation, undesired transient insulation alarm. The response time associated with this filtering function does not affect the ungrounded power system. Three values are available for this parameter:

(12) Applicable for IFL12MC and IFL12MCT

Value	Response time	Advised Usage
5s (13)	5 seconds	Use in maintenance mode. Diagnose fast variation of the insulation resistance and leakage capacitance. Use in the following cases: • Detecting short time transient insulation faults. • When manually locating insulation faults by opening circuit breakers.
40s (Default)	40 seconds	Use in operation mode. To monitor insulation of typical installations.
400s	400 seconds	Use in operation mode. To monitor insulation of highly disturbed installations and/or installations with high leakage capacitance.

Voltage adaptor (V. Adapt)

Applicable for IFL12MC, IFL12LMC, and IFL12MCT.

You can use voltage adapter to monitor ungrounded power system with a rated voltage higher than 480 V AC/DC.

Two values are available for this parameter:

Value	Advised Usage
None (Default)	Use when the monitored ungrounded power system rated voltage is ≤ 480 V AC/DC.
VA1T	Use when the monitored ungrounded power system rated voltage is > 480 V AC/DC and ≤ 1000 V AC/DC.

See Accessories, page 12 for more information on voltage adaptors.

Channel Name

You can set the channel name of your preference for all 12 channels.

The channel name can be set only in English. The allowed characters are:

- A to Z
- a to z
- 0 to 9
- Special characters (Hyphen-minus (-), Slash (/), Percent(%), Full stop (.), (blank))

The length of the channel name is automatically adjusted depending on the character selection. For example, if the channel name contains only the character “W”, then the maximum length is 8 characters and if the channel name contains only the character “I”, then the maximum length is 18 characters.

Use the following contextual buttons for editing:

- to modify the selected character.
- to select the character to the right of the one that is currently selected, or to loop back to the character on the left.
- to confirm the channel name.

(13) Not applicable for MRw. mode

Changing the channel name

1. Navigate to **Menu > Settings > Network > Channel Name**.

   The **CHANNEL NAME** screen displays with the channel grid and a flashing dot on the channel 1 grid. This indicates the channel 1 is selected.

2. Perform any one of the following:

   - To modify the name for channel 1, press button.
   - To modify the name for other channels, press button to navigate to the desired channel and press button.
   - To modify the name for all channels, press button and press button.

   The **CHANNEL NAME** screen displays with the default name **CHANNEL – 1** and the character C highlighted.

3. Press the button.

   The **CHANNEL NAME** screen displays and the default name is deleted and the screen is blank.

   - To delete the channel name, see Deleting the channel name, page 37.
   - To modify the channel name, press the button.

     The **CHANNEL NAME** screen displays and the highlighted character displays blank character.

     Use the button to navigate to the desired character.

     NOTE: On each press of button, the characters are looped in the following sequence:

     1. A to Z
     2. a to z
     3. 0 to 9
     4. Special characters (Minus (-),Slash (/), Percent(%), Full stop (.), (blank))

4. Press the button and navigate to the next character.
5. Perform Step 3 to update the selected character.
6. Perform Step 4 and Step 5 for other characters.
7. Press the button to confirm the channel name.

   A **Saved** message displays.

8. Press the **Esc** button.

   The **CHANNEL NAME** screen displays with the channel grid and a flashing dot on the channel 1 grid. This indicates the channel 1 is selected.

9. Perform Step 2 to Step 7 to change other channel names.

Deleting the channel name

1. Navigate to **Menu > Settings > Network > Channel Name**.

   The **CHANNEL NAME** screen displays with the channel grid and a flashing dot on the channel 1 grid. This indicates the channel 1 is selected.

2. Perform any one of the following:
   - To delete the name for channel 1, press button.
   - To delete the name for other channels, press button to navigate to the desired channel and press button.
   - To delete the name for all channels, press button and press button.

   The **CHANNEL NAME** screen displays with the default name **CHANNEL – 1** and the character C highlighted.
3. Press the button.

   The **CHANNEL NAME** screen displays and the default name is deleted and the screen is blank.
4. Press the button to confirm the channel name deletion.

   A **Saved** message displays.
5. Press the **Esc** button.

   The **CHANNEL NAME** screen displays with the channel grid and a flashing dot on the channel 1 grid. This indicates the channel 1 is selected.
6. Perform Step 3 to Step 5 to delete other channel names.

Alarm configuration

You can configure the insulation alarm threshold and delay to suit to the electrical applications you want to monitor.

You can access the device alarm parameters by selecting **Menu > Settings > Ins. Alarm**.

The alarm parameters are **Ins. Alarm** and **Ins. Al. Delay**.

The parameter **Ins. Al. Delay** is not applicable for IFL12C.

You can set the parameter values for all commissioned or uncommissioned channels [(14)]

To modify the parameter value, see Parameter modification using the display, page 27.

Insulation alarm (Ins. Alarm) thresholds

You can set the threshold value as per the level of insulation of the application you monitor.

The allowed values for this parameter for IFL12MC, IFL12LMC, and IFL12MCT are from **0.2 kΩ** to **200 kΩ**. The default value is **10 kΩ**. This value can be set for 12 channels individually or together.

The allowed values for this parameter for IFL12C are **Low**, **Medium**, and **High**. The default value is **Low**. This value is common for all 12 channels.

When the device is powered up, it retrieves the last insulation alarm threshold values recorded.

An insulation alarm is cleared when the insulation level reaches 20% above the threshold.

(14) Applicable for IFL12MC, IFL12LMC, and IFL12MCT

Insulation alarm threshold hysteresis

A hysteresis is applied to limit the error in the insulation alarm due to fluctuations in the measurement when approaching threshold value.

A hysteresis principle is applied:

- When the insulation value measured decreases and falls below the setting threshold, the insulation alarm is triggered or the countdown is started if an insulation alarm time delay has been set.
- When the insulation value measured increases and exceeds 1.2 times the set threshold (i.e. the setting threshold +20%), the insulation alarm is deactivated and a "transient" fault is displayed through a black/white font flashing.

The following diagrams show the behaviors:

- Without hysteresis:

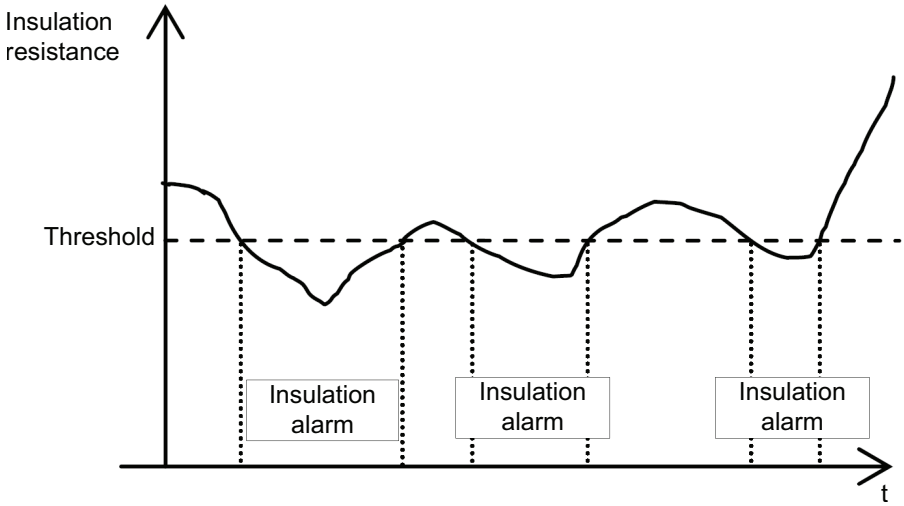

- With hysteresis:

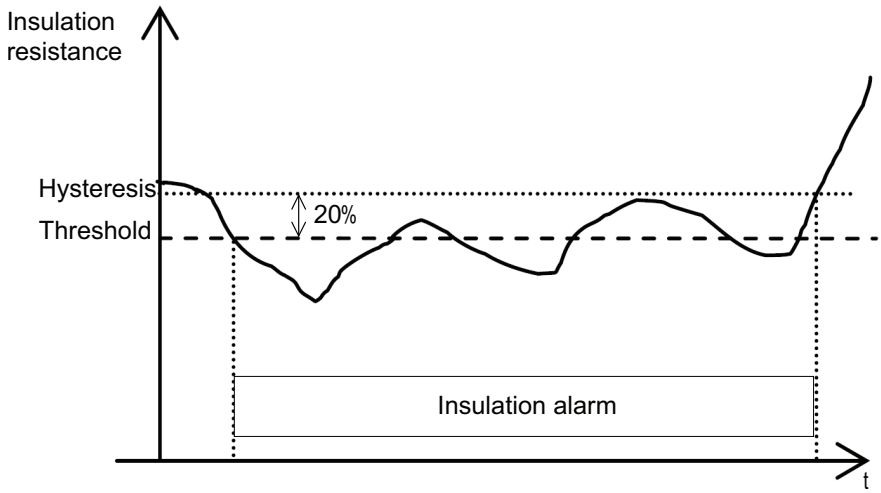

Insulation alarm time delay (Ins. Al. Delay)

Applicable for IFL12MC, IFL12LMC, and IFL12MCT.

In some applications you might want to delay the triggering of an alarm while certain machines are starting up, otherwise erroneous alarms could be triggered. You can set the threshold delay to filter these erroneous alarms.

The threshold delay is time filter. This delay can be used in harsh electrical systems to avoid false insulation alarms. The device does not report insulation fault that do not remain for a duration longer than the delay set up.

The allowed values for this parameter are from **0 s** to **120 min**. The default value is **0 s**.

I/O configuration

Applicable for IFL12MC, IFL12LMC, and IFL12MCT.

You can configure the relay parameters to suit the type of relay output information.

You can access the device I/O parameters by selecting **Menu > Settings > I/O Config**.

The I/O parameters are **Ins. Al. Relay**, **Ack. Al. Relay**, and **Test w.Relays**.

To modify the parameter value, see Parameter modification using the display, page 27.

Insulation alarm relay (Ins. Al. Relay)

Applicable for IFL12MC, IFL12LMC, and IFL12MCT.

You can set the insulation alarm relay mode depending on the status of insulation.

The allowed values for this parameter are **FS** and **Std.**. The default value is **FS**.

When the insulation alarm relay is configured in failsafe (**FS**) mode:

- The insulation alarm relay is activated, that is, energized, in the following case:
  - No insulation fault is detected.
  - Transient fault is detected.
  - Insulation fault is detected and acknowledged (if **Menu > Settings > I/O Config > Ack. Al. Relay** is set to **ON**).

    NOTE: Applicable for IFL12MC, IFL12LMC, and IFL12MCT.
- The insulation alarm relay is deactivated, that is, de-energized, in the following cases:
  - Insulation fault is detected.
  - On first measurement after power cycle and on toroid disconnect.
  - The product is inoperative (detected by auto-test).
  - The auxiliary power supply is lost.
  - When you trigger an auto-test with relays, the relay toggles for 3 seconds. See Test with relays (**Test w. Relays**), page 42 and Auto test overview, page 46 for more information.

    NOTE: Applicable for IFL12MC, IFL12LMC, and IFL12MCT.
  - Insulation fault is detected and acknowledged (if **Menu > Settings > I/O Config > Ack. Al. Relay** is set to **OFF**).

    NOTE: Applicable for IFL12MC, IFL12LMC, and IFL12MCT.
  - When the voltage signal is unavailable

    NOTE: Applicable for IFL12MC, IFL12LMC, and IFL12MCT.
  - Channel failure

When the insulation alarm relay is configured in standard (**Std.**) mode:

- The insulation alarm relay is activated, that is, energized, in the following cases:
  - Insulation fault is detected.
  - The product is inoperative (detected by auto-test).
  - When you trigger an auto-test with relays, the relay toggles for 3 seconds. See Test with relays (**Test w. Relays**), page 42 and Auto test overview, page 46 for more information.

    NOTE: Applicable for IFL12MC, IFL12LMC, and IFL12MCT.
  - Insulation fault is detected and acknowledged (if **Menu > Settings > I/O Config > Ack. Al. Relay** is set to **OFF**).

    NOTE: Applicable for IFL12MC, IFL12LMC, and IFL12MCT.
  - Toroid disconnect
  - When the voltage signal is unavailable

    NOTE: Applicable for IFL12MC, IFL12LMC, and IFL12MCT.
  - Channel failure
- The insulation alarm relay is deactivated, that is, de-energized, in the following cases:
  - No insulation fault is detected.
  - On first measurement after power cycle.
  - When you trigger an auto-test with relays, the relay toggles for 3 seconds. See Test with relays (**Test w. Relays**), page 42 and Auto test overview, page 46 for more information.

    NOTE: Applicable for IFL12MC, IFL12LMC, and IFL12MCT.
  - Insulation fault is detected and acknowledged (if **Menu > Settings > I/O Config > Ack. Al. Relay** is set to **ON**).

    NOTE: Applicable for IFL12MC, IFL12LMC, and IFL12MCT.
  - The auxiliary power supply is lost.
  - Transient fault is detected.

Insulation alarm relay acknowledgement (Ack Al. Relay)

Applicable for IFL12MC, IFL12LMC, and IFL12MCT.

You can set the insulation alarm relay acknowledgment as per the usage of loads connected to the relay.

When the relays are connected to loads (for example, horns or lamps), it is advised to turn off these external signaling devices before the insulation level rises back to a level above the setup thresholds. This can be done by pressing the acknowledge button while in insulation alarm state.

In certain system configurations, it is required to prevent this type acknowledgement and only retrigger the relays when the insulation level rises above the setup thresholds. This is done by changing the corresponding parameter.

The allowed values for this parameter are **ON** and **OFF**. The default value is **ON**.

To set the acknowledge alarm relay ON, select **Menu > Settings > I/O Config > Ack Al. Relay > ON**.

To set the acknowledge alarm relay OFF, select **Menu > Settings > I/O Config > Ack Al. Relay > OFF**.

When the device detects an insulation fault, the insulation alarm relay is triggered.

- When the value is set to ON and on acknowledgement of the alarm, the relay returns to its initial position.

- When the value is set to OFF and on acknowledgement of the alarm, the relay does not return to its initial position.

Test with relays (Test w. Relays)

Applicable for IFL12MC, IFL12LMC, and IFL12MCT.

You can set a three-second toggle to the insulation alarm relay during a manually launched auto test. See Auto test overview, page 46 for information on auto test.

The allowed values for this parameter are **ON** and **OFF**. The default value is **ON**.

R and C measurements

Insulation measurements

The device monitors the insulation per connected channel of ungrounded power system.

The device:

- measures and displays:
  - the insulation resistance R (Ω) continuously,
  - the insulation capacitance C, which is the leakage capacitance of the distribution system to ground (µF), (15)
- calculates and displays the impedance Zc (kΩ) associated with C for 12 channels. (15)

To view these values, navigate to **Menu > Monitoring**. To view each channel measurements, use the contextual menu buttons.

Effect of leakage capacitance and frequency disturbances on the measurement accuracy of R

The leakage capacitance (C) creates a leakage path for the measurement signal and reduces the level of the useful signal that flows through the insulation resistance (R).

IMD injects an adaptive multi-frequency measurement signal with low frequencies and includes high-performance integration algorithms. It makes the device compatible with large power systems that have a high value of leakage capacitance and this operates out of the frequency disturbance range. Because the device is compatible with IMD, the device operates correctly even with impact of leakage capacitance and frequency disturbances.

Monitoring system insulation

The device monitors the ungrounded power system insulation in resistance in accordance with the following timing diagram which represents the default settings:The device monitors the ungrounded power system insulation in resistance in accordance with the following timing diagram when the locating signal is available:

(15) Applicable for IFL12MC, IFL12LMC, and IFL12MCT

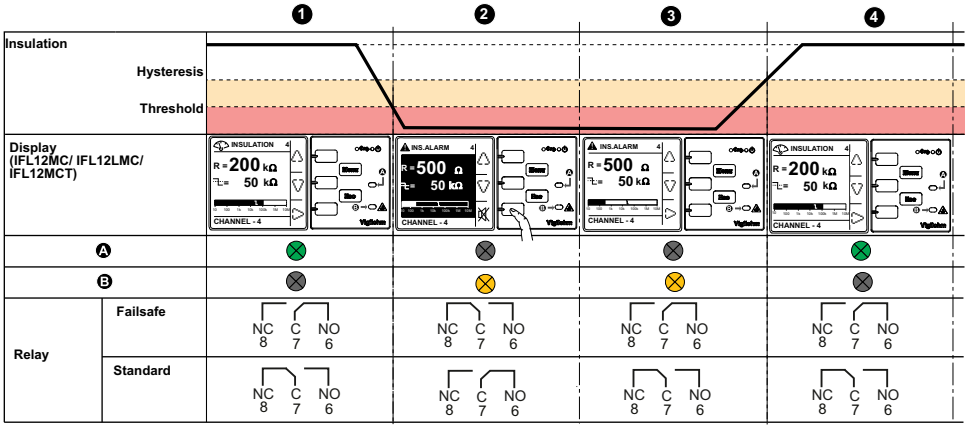

1	Network insulation is normal and no alarm on any channel.
2	An insulation fault occurred on channel 4. Active alarm is displayed on channel 4. Press button to acknowledge the alarm. See Relay Mode, page 40 for more information on relay modes. See Relay Acknowledgement, page 41 for more information on relay acknowledgement.
3	An insulation fault occurred on channel 4. Active alarm acknowledged.
4	The insulation fault is corrected. The alarm LED turns off. The device reverts to normal status.

Log

Applicable for IFL12MC, IFL12LMC, and IFL12MCT.

The device records the details of the 240 most recent fault events. You can access all the 240 logs through HMI and communication. The fault events are triggered by insulation fault status.

Event 1 is the event that was recorded most recently and event 240 is the oldest recorded event.

The oldest event is deleted when a new event occurs (the table is not reset).

By referring to this information, the performance of the distribution system can be improved and maintenance work is facilitated.

Insulation fault log display screen

You can the view the details of an insulation fault event by navigating to **Menu > Logging**.

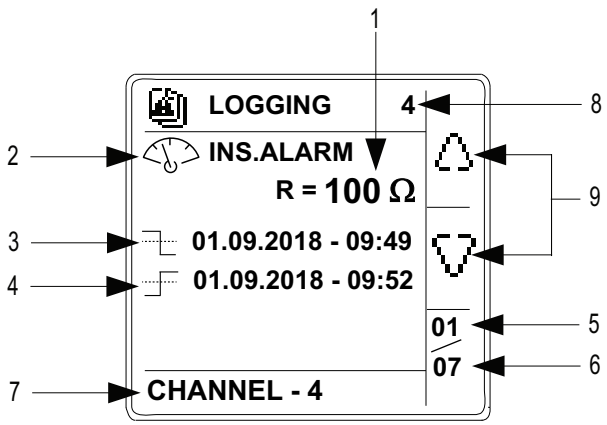

1	Insulation fault value recorded
2	Type of fault recorded: Insulation fault **NOTE:** Only insulation fault is recorded as primary record.
3	Date and time when the fault appeared **NOTE:** This information is stored as primary record.
4	Date and time when the fault disappeared due to any one of the following event: • Insulation fault acknowledgement • Transient fault • Power failure while on active alarm. • Toroid disconnect while on active alarm. • Voltage signal unavailable while on active alarm. (16) • Product or channel error while on active alarm. • Automatic commissioning initiated while on active alarm. **NOTE:** This information is stored as secondary record.
5	Number of the event displayed
6	Total number of events recorded
7	Name of the channel, where the log is recorded
8	Number of the channel, where the log is recorded
9	Up and down arrows: Use to view recorded events

Trends

Applicable for IFL12MC, IFL12LMC, and IFL12MCT.

The device records and displays the average of the system insulation in form of curves. The device displays curves as per the following durations:

- last hour (1 point every 2 minutes)
- last day (1 point per hour)

The chart scale automatically adjusts to the shown data to optimize the display accuracy.

The curves show a general trend how the system insulation evolves over time. They are calculated from averages related to shorter or longer durations depending on the charts. So charts may not show transient insulation faults when they are smoothed over time.

Trend screen

You can view the trends by navigating to **Menu > Trend**.

An example of Last Day trend page is as follows:

(16) Applicable for IFL12MC, IFL12LMC, and IFL12MCT

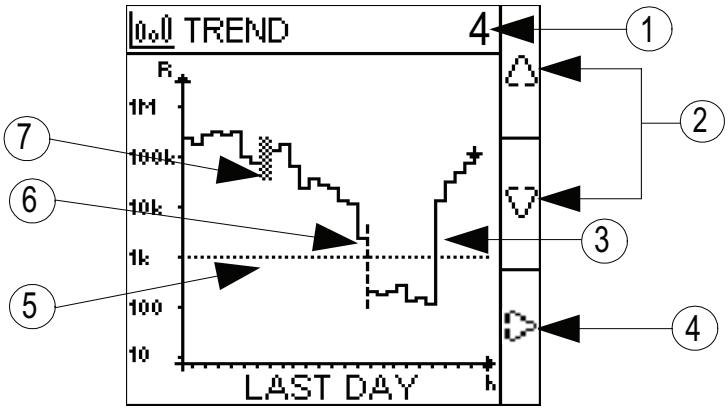

1	Number of the channel, whose trend information is displayed
2	Up and down arrows: To view the trends for other channels
3	Measured value of the insulation resistance
4	Right arrow: To view the pages of trend. The pages are Last hour, Last day
5	Existing value of the insulation alarm threshold
6	Vertical dotted line: indicates a power interruption (duration undefined)
7	Squared area: indicates that the channels are uncommissioned

NOTE:

During the following conditions, the measured value of insulation resistance is plotted as 250 kΩ:

- Toroid disconnect
- Locating signal unavailable

Reset

You can reset logs and trends. Further, you can perform factory reset.

You can access the device reset parameters by selecting **Menu > Settings > Reset**.

The reset parameters are **Reset Logs**, **Reset Trend**, and **Factory Reset**.

The parameters **Reset Logs** and **Reset Trend** are not applicable for IFL12C.

On performing reset of logs or trends, the existing logs or trend information is erased but the settings parameter value remains unchanged. On performing factory reset, the device restarts and automatic commissioning is initiated. Also, settings parameter values are reset to default.

The complete list of parameter settings, its default value, and allowed values are:

Parameter	Default Value	Allowed Values
Ins. Alarm	IFL12MC, IFL12LMC, and IFL12MCT: **10 kΩ** IFL12C: **Low**	IFL12MC, IFL12LMC, and IFL12MCT: **0.2...200 kΩ** IFL12C: **Low, Medium, and High**
Ins. Al. Delay (17)	**0 s**	**0 s...120 mn**
App (17)	**Power C**	• **Power C** • **Control C** • **MRw** (18)

(17) Applicable for IFL12MC, IFL12LMC, and IFL12MCT
(18) Applicable for IFL12MC and IFL12MCT

Parameter	Default Value	Allowed Values
Filtering	**40s**	• **5s**[19] **40s** • **400s**
Frequency [20]	**50 Hz**	• **50 Hz** • **60 Hz** • **400 Hz** • **DC**
V.Adapt [20]	**None**	• **None** • **VA1T**
Channel Name	**CHANNEL – 1** to **CHANNEL – 12** for 12 channels	• A to Z • a to z • 0 to 9 • Special characters (Hyphen-minus (-), Slash (/), Percent(%), Full stop (.), (blank)) The length of the channel name is automatically adjusted depending on the character selection. For example, if the channel name contains only the character “W”, then the maximum length is 8 characters and if the channel name contains only the character “I”, then the maximum length is 18 characters.
Ins. Al. Relay [20]	**FS**	• **FS** • **Std.**
Ack. Al. Relay [20]	**ON**	• **ON** • **OFF**
Test w.Relays [20]	**ON**	• **ON** • **OFF**
Address	**1**	**1...247**
Baudrate	**19200**	• **4800** • **9600** • **19200** • **38400**
Parity	**Even**	• **None** • **Even** • **Odd**
Modify Password	**0000**	**0000...9999**
Activation (Password)	**OFF**	• **ON** • **OFF**
Contrast	**50%**	**10...100%**
Backlight	**100%**	**10...100%**
Screen Saver [20]	**OFF**	• **ON** • **OFF**

Auto-test

Auto test overview

The device performs auto-test in background to detect any potential faults in its internal and external circuits.

(19) Not applicable for MRw mode
(20) Applicable for IFL12MC, IFL12LMC, and IFL12MCT

The device's auto test function tests:

- The product: indicator lights, internal electronics.
- The measuring chain and the insulation alarm relay.

You can initiate auto test by pressing the **T** contextual menu button on the **Summary** screen. Auto test is disabled during insulation fault, transient fault, product error, or system error.

Auto test sequence

During auto test, the device's indicator lights illuminate and information is shown on the display.

The following LEDs turn ON in sequence and turn OFF after the predefined time:

1. Alarm Orange
2. No Alarm Green
3. Product Status Red
4. Product Status Green
5. Communication Orange

The relay toggles. See Test with relays, page 42 for information on performing auto test with relays.

- If the auto test is successful, the following screen appears for 3 seconds and a status screen is displayed:

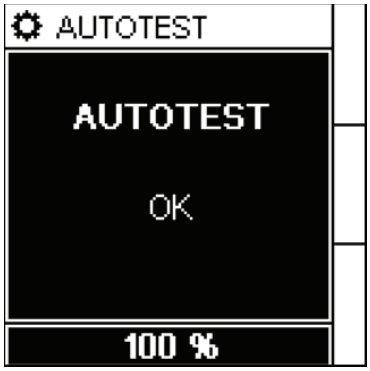

- If the auto test fails, the **Product Status** LED turns ON and a message is displayed to indicate that the product is malfunctioning. Disconnect the auxiliary power supply of device and reconnect. If the fault persists, contact technical support.

Communication

Communication parameters

Before initiating any communication with the device, you must configure the Modbus communication port. You can configure communication parameters by selecting (**Menu > Settings > Modbus**).

The communication parameters and its allowed and default values are as follows:

Parameter	Default value	Allowed values
Address	**1**	**1...247**
Baud rate	**19200**	• **4800** • **9600** • **19200** • **38400**
Parity	**Even**	• **None** • **Even** • **Odd**

To modify the parameter value, see Parameter modification using the display, page 27.

In point-to-point mode, when the device is directly connected to a computer, the reserved address 248 can be used to communicate with the device irrespective of the device internal address.

Modbus functions

The device supports Modbus function codes.

Function Code		Function Name
Decimal	**Hexadecimal**	
3	0x03	Read Holding Registers (21)
4	0x04	Read Input Registers (21)
6	0x06	Write Single Register
8	0x08	Diagnostic Modbus
16	0x10	Write Multiple Registers
43 / 14	0x2B / 0E	Read Device Identification
43 / 15	0x2B / 0F	Get Date/Time
43 / 16	0x2B / 10	Set Date/Time

Read Device Identification request

Number	Type	Value
0	VendorName	Schneider Electric
1	ProductCode	IMDIFL12C / IMDIFL12MC / IMDIFL12LMC / IMDIFL12MCT
2	MajorMinorRevision	XXX.YYY.ZZZ
3	VendorURL	www.se.com

(21) The Read Holding and Read Input registers are identical.

Read Device Identification request (Continued)

Number	Type	Value
4	ProductName	Insulation Fault Locator
5	ModelName	IFL12C / IFL12MC / IFL12LMC / IFL12MCT

The device answers any type of requests (basic, regular, extended).

Modbus register table format

Register tables have the following columns.

Column heading	Description
Address	The address of the Modbus, in decimal (dec) and hexadecimal (hex) formats.
Register	The register of the Modbus, in decimal (dec) and hexadecimal (hex) formats.
R/W	Read only (R) or read/write (R/W) register.
Unit	The unit in which the information is expressed.
Type	The coding data type. **NOTE:** For the Float32 data type, the byte order follows the Big Endian format.
Range	Permitted values for this variable, usually a subset of what the format allows.
Description	Provides information about the register and the values applied.

Modbus registers table

The following table lists the Modbus registers that apply to your device.

System status registers

Address		Register		R/W	Unit	Type	Range	Description
dec	hex	dec	hex					
100	64	101	65	R	–	Uint16	–	Product identifier • 17033 - IFL12C • 17034 - IFL12MC • 17035 - IFL12LMC • 17036 - IFL12MCT
114..115	72...73	115...116	73...74	R	–	Uint32	–	Product state • Bit1 - Reserved • Bit2 - Auto test • Bit3 - Commissioning • Bit4 - Safe state • Bit5 - Monitoring • Bit6 - Channel error • Bit7 - Product error • Bit8 - System error • Bit9 - Reserved • Bit10 - Reserved
116	74	11722	75	R	–	Uint16	–	Product error codes • 0XFFFF - No error • 0x0000 - Unknown error

System status registers (Continued)

Address		Register		R/W	Unit	Type	Range	Description
dec	hex	dec	hex					
								• 0x0DEF - Undefined model • 0xAF00 - Auto-test failure • 0xBE00 - Metering • 0xC0F1 - Configuration error • 0x5EFA - Sensor call problem • 0xD1A1 - Glued IO • 0xD1A2 - RAM • 0xD1A3 - EEPROM • 0xD1A4 - Relay • 0xD1A5 - Status input • 0xD1A6 - Flash • 0xD1A7 - SIL • 0xE000 - NMI interrupt • 0xE001 - Hard fault exception • 0xE002 - Memory fault exception • 0xE003 - Bus fault exception • 0xE004 - Usage fault exception • 0xE005 - Unexpected interrupt • 0xFAF5 - Unexpected interrupt
120...1-39	78...8B	121...140	79...8C	R	–	UTF8	–	Product family
140...1-59	8C...9F	141...160	8D...A0	R/W	–	UTF8	–	Product name (User application name)
160...1-79	A0...B3	161...180	A1...B4	R	–	UTF8	–	Product code • IMDIFL12C • IMDIFL12MC • IMDIFL12LMC • IMDIFL12MCT
180...1-99	B4...C7	181...200	B5...C8	R	–	UF8	–	Manufacturer: Schneider Electric
208...2-19	D0...DB	209...220	D1...DC	R	–	UF8	–	ASCII serial number
220	DC	221	DD	R	–	Uint16	–	Manufacturing unit identifier
227...2-46	E3...F6	228...247	E4...F7	R	–	UTF8	–	Product capability
247...2-66	F7...10-A	248...267	F8...10B	R	–	UTF8	–	Product model • IFL12C • IFL12MC • IFL12LMC • IFL12MCT
300...3-06	12C...-132	301...307	12D...133	R	–	Uint16	–	Date and time in 7 register format The following parameters correspond to each register: • 300 - Year • 301 - Month • 302 - Day • 303 - Hour • 304 - Minute • 305 - Second • 306 - Millisecond

System status registers (Continued)

Address		Register		R/W	Unit	Type	Range	Description
dec	hex	dec	hex					
307...3-10	133...1-36	308...311	134...137	R/W	–	Uint16	–	Date and time in TI081 format. See Date and time (TI081 format), page 60.
320...3-24	140...1-49	321...325	141...145	R	–	Uint16	–	Present firmware version • X represents the primary revision number, which is encoded in register 321 • Y represents the secondary revision number, which is encoded in register 322 • Z represents the quality revision number, which is encoded in register 323
325...3-29	145...1-49	326...330	146...14A	R	–	Uint16	–	Previous firmware version • X represents the primary revision number, which is encoded in register 326 • Y represents the secondary revision number, which is encoded in register 327 • Z represents the quality revision number, which is encoded in register 328
340...3-44	154...1-58	341...345	155...159	R	–	Uint16	–	Boot firmware version • X represents the primary revision number, which is encoded in register 341 • Y represents the secondary revision number, which is encoded in register 342 • Z represents the quality revision number, which is encoded in register 343
500...5-05	1F4...1-F9	501...506	1F5...1FA	R	–	UTF8	–	Hardware revision
550...5-55	226...2-2B	551...556	227...22C	R	–	UTF8	–	Existing OS version
556...5-61	22C...-231	557...562	22D...232	R	–	UTF8	–	Previous OS version
562...5-67	232...2-37	563...572	233...23C	R	–	UTF8	–	Existing RS/Boot version
586...5-91	24A...-24F	587...592	24B...250	R	–	UTF8	–	Existing SIL OS version

Modbus

Address		Register		R/W	Unit	Type	Range	Description
dec	hex	dec	hex					
750	2EE	751	2EF	R/W	–	Uint16	1...247	Device address Default value: 1
751	2EF	752	2F0	R/W	–	Uint16	• 0 = 4800 • 1 = 9600 • 2 = 19200 • 3 = 38400	Baud rate Default value: 2 (19200)
752	2F0	753	2F1	R/W	–	Uint16	• 0 = Even • 1 = Odd • 2 = None	Parity Default value: 0 (Even)

Insulation alarm

Address		Register		R/W	Unit	Type	Range	Description
dec	hex	dec	hex					
1102	44E	1103	44F	R	–	Uint16	–	Product alarm status • Bit 1...12 - Channel status for channel 1 to 12 respectively This bit is set for the corresponding channel for any of the following states: ◦ Active alarm ◦ Alarm acknowledged ◦ Toroid disconnect ◦ First measurement ◦ Channel error • Bit 13 - System error This bit is set for the following states: ◦ Voltage signal unavailable ◦ Toroid disconnect ◦ No toroid • Bit 14 - Product error This bit is set for Product failure state.
1103	44F	1104	450	R	–	Uint16	–	Compliment for product alarm status
1104...-1105	450...45-1	1105...1-106	451...452	R	–	Uint32	0...0XFFFFFFFF	Status counter

Insulation alarm (Continued)

Address		Register		R/W	Unit	Type	Range	Description
dec	hex	dec	hex					
1110...1-111	456...45-7	1111...1-112	457...458	R	–	Uint32	–	Product status • 0 - No alarm • Bit 1 - Active alarm • Bit 2 - Reserved • Bit 3 - Transient alarm • Bit 4 - Alarm acknowledged • Bit 5 - Reserved • Bit 6 - Reserved • Bit 7 - Reserved • Bit 8 - Reserved • Bit 9 - First measurement • Bit 10 - Reserved • Bit 11 - Reserved • Bit 12 - Reserved • Bit 13 - Auto test • Bit 14 - Commissioning • Bit 15 - Reserved • Bit 16 - Uncommissioned • Bit 17 - Locating signal unavailable • Bit 18 - Over limit capacitance • Bit 19 - Over voltage • Bit 20 - Reserved • Bit 21 - Reserved • Bit 22 - Toroid disconnect • Bit 23 - Reserved • Bit 24 - Reserved • Bit 25 - Product error • Bit 26 - Channel error • Bit 27 - Reserved • Bit 28 - Reserved • Bit 29 - Reserved • Bit 30 - Reserved • Bit 31 - Reserved • Bit 32 - Power Down
1112...1-134	458...46-E	1113...1-135	459...46F	R	–	Uint32	–	Channel (1 to 12) status. Each channel represents 2 registers. • 0 - No alarm • Bit 1 - Active alarm • Bit 2 - Reserved • Bit 3 - Transient alarm • Bit 4 - Alarm acknowledged • Bit 5 - Reserved • Bit 6 - Reserved • Bit 7 - Reserved • Bit 8 - Reserved • Bit 9 - First measurement • Bit 10 - Reserved • Bit 11 - Reserved • Bit 12 - Reserved • Bit 13 - Auto test • Bit 14 - Commissioning • Bit 15 - Reserved • Bit 16 - Uncommissioned • Bit 17 - Locating signal unavailable

Insulation alarm (Continued)

Address		Register		R/W	Unit	Type	Range	Description
dec	hex	dec	hex					
								• Bit 18 - Over limit capacitance • Bit 19 - Over voltage • Bit 20 - Reserved • Bit 21 - Reserved • Bit 22 - Toroid disconnect • Bit 23 - Reserved • Bit 24 - Reserved • Bit 25 - Product error • Bit 26 - Channel error • Bit 27 - Reserved • Bit 28 - Reserved • Bit 29 - Reserved • Bit 30 - Reserved • Bit 31 - Reserved • Bit 32 - Power Down

Diagnostics

Address		Register		R/W	Unit	Type	Range	Description
dec	hex	dec	hex					
2005...-2006	7D5...7-D6	2006...2-007	7D6...7D7	R	–	Uint32	–	Total number of power cycles since first power-up of the product

Diagnostics

Address		Register		R/W	Unit	Type	Range	Description
dec	hex	dec	hex					
2051	803	2052	804	W	–	Uint16	–	Write 0xF0A1 to reset all logs

CRC

Address		Register		R/W	Unit	Type	Range	Description
dec	hex	dec	hex					
2500...-2501	9C4...9-C5	2501...2-502	9C5...9C6	R	–	Uint32	–	Application CRC value.
2502...-2503	9C6...9-C7	2503...2-504	9C7...9C8	R	–	Uint32	–	Boot CRC value

Settings

Address		Register		R/W	Unit	Type	Range	Description
dec	hex	dec	hex					
2997...-2998	BB5...BB6	2998...2-999	BB6...BB7	R	–	Uint16	–	Total number of settings changed since first power-up. Incremented by 1 for each change of one or several parameters.
3001	BB9	3002	BBA	R/W	–	Uint16	• 1= Standard • 2 = Failsafe	**NOTE:** Applicable for IFL12MC, IFL12LMC, and IFL12MCT. Insulation alarm relay logic command Default value: 2 (Failsafe)
3008	BC0	3009	BC1	R/W	–	Uint16	• 0 = 5s • 1 = 40s	Network filtering Default value: 1(40s)

Settings (Continued)

Address		Register		R/W	Unit	Type	Range	Description
dec	hex	dec	hex					
							• 2 = 400s	
3009	BC1	3010	BC2	R/W	Hz	Uint16	• 0 Hz • 50 Hz • 60 Hz • 400 Hz	**NOTE:** Applicable for IFL12MC, IFL12LMC, and IFL12MCT. Network frequency Default value: 50 Hz
3014	BC6	3015	BC7	R/W	–	Uint16	0000...9999	Password Default value: 0000
3015	BC7	3016	BC8	R/W	–	Uint16	• 0 = OFF • 1 = ON	Password protection Default value: 0 (password protection deactivated)
3016	BC8	3017	BC9	R/W	–	Uint16	• 0 = English • 1 = French • 2 = Spanish • 3 = Russian • 4 = Chinese • 5 = Italian • 6 = German • 7 = Portuguese	Interface language Default value: 0 (English)
3017	BC9	3018	BCA	R/W	%	Uint16	10...100%	Screen contrast Default value: 50%
3018	BCA	3019	BCB	R/W	%	Uint16	10...100%	Screen brightness. Default value: 100%
3019	BCB	3020	BCC	R/W	–	Uint16	• 0 = None • 1 = VA1T	**NOTE:** Applicable for IFL12MC, IFL12LMC, and IFL12MCT. High voltage adapter Default value: 0 (no adapter)
3023	BCF	3024	BD0	R/W	–	Uint16	• 0 = Disabled • 1 = Enabled	**NOTE:** Applicable for IFL12MC, IFL12LMC, and IFL12MCT. Acknowledge alarm relay Default value: 1 (Enabled)
3025	BD1	3026	BD2	R/W	–	Uint16	• 0 = Power • 1 = Control • 2 = MRw	**NOTE:** Applicable for IFL12MC, IFL12LMC, and IFL12MCT. MRw applicable for IFL12MC and IFL12MCT. Default value: 0 (Power)
3029	BD5	3030	BD6	R/W	–	Uint16	• 0 = OFF • 1 = ON	**NOTE:** Applicable for IFL12MC, IFL12LMC, and IFL12MCT. Auto-test: test with relays Default value: 1 (ON)
3033	BD9	3034	BDA	R/W	–	Uint16	• 0 = OFF • 1 = ON	**NOTE:** Applicable for IFL12MC, IFL12LMC, and IFL12MCT.

Settings (Continued)

Address		Register		R/W	Unit	Type	Range	Description
dec	hex	dec	hex					
								Screen saver activation Default value: 0 (OFF)
3034	BDA	3035	BDB	R/W	s	Uint16	30....3600 s	**NOTE:** Applicable for IFL12MC, IFL12LMC, and IFL12MCT. Screen saver delay Default value: 300 s (5 min)
3042	BE2	3043	BE3	W	–	Uint16	–	Commissioning mode Write 0xAABB to enter commisioning Write 0xBBAA to exit commisioning
3043	BE3	3044	BE4	R/W	–	Uint16	• 0 = Low current (high insulation) • 1 = Mid current (mid insulation) • 2= High current (low insulation)	**NOTE:** Applicable for IFL12C. Insulation alarm threshold Default value: 0 (Low)

Monitoring

Address		Register		R/W	Unit	Type	Range	Description
dec	hex	dec	hex					
10000..-.10023	2710...-2727	10001...-10024	2711...27-28	R	Ohm	Float32	–	**NOTE:** Applicable for IFL12MC, IFL12LMC, and IFL12MCT. Resistance for 12 channels. Each channel represents 2 registers.
10024..-.10047	2728...-273F	10025...-10048	2729...27-40	R	F	Float32	–	**NOTE:** Applicable for IFL12MC, IFL12LMC, and IFL12MCT. Capacitance for 12 channels. Each channel represents 2 registers.
10072..-.10083	2758...-2763	10073...-10084	2759...27-64	R	–	Uint16	• 0 = Equal • 1 = Under • 2 = Over • 3 = UnderStrict • 4 = OverStrict	**NOTE:** Applicable for IFL12MC, IFL12LMC, and IFL12MCT. R equality for 12 channels. Each channel represents 1 register.
10084..-.10095	2764...-276F	10085...-10096	2765...27-70	R	–	Uint16	• 0 = Equal • 1 = Under • 2 = Over • 3 = UnderStrict • 4 = OverStrict	**NOTE:** Applicable for IFL12MC, IFL12LMC, and IFL12MCT. C equality for 12 channels. Each channel represents 1 register.

NOTE: The following registers is applicable for channel 1. For channel 2 register, add “30” value to channel 1 register. For channel 3 register, add “30” value to channel 2 register and so on.

Settings – For individual channels

Address		Register		R/W	Unit	Type	Range	Description
dec	hex	dec	hex					
11000...-.11008	2A-F8...2-B00	11001...-11009	2AF9...2-B01	R/W	–	UTF8	Allowed length : 18 characters	Name of the channel. The most significant byte of the fist register contains first character. The last significant byte of last register contains last character. Default value: CHANNEL - 1
11009...-.11010	2B01...-2B02	11010...-11011	2B02...2-B03	R/W	Ohm	Uint32	0.2...200 kΩ	**NOTE:** Applicable for IFL12MC, IFL12LMC, and IFL12MCT. Insulation alarm threshold Default value: 10 kΩ
11015	2B07	11016	2B08	R/W	s	Uint16	0...7200 s	**NOTE:** Applicable for IFL12MC, IFL12LMC, and IFL12MCT. Insulation alarm time delay Default value: 0 s
11016	2B08	11017	2B09	R/W	turns	Uint16	• 0 = Uncommissioned • 470, 1000 = Auto • 300...3000 = Manual	Number of toroid turns Default value: 0

NOTE:

Applicable for IFL12MC, IFL12LMC, and IFL12MCT.

The following registers is applicable for channel 1. For channel 2 register, add “30” value to channel 1 register. For channel 3 register, add “30” value to channel 2 register and so on.

Trending – For individual channels

Address		Register		R/W	Unit	Type	Range	Description
dec	hex	dec	hex					
12030	2EFE	12031	2EFF	R	–	Uint16	Hour trending	Number of new records in trending buffer not yet read by the Modbus master.
12031	2EFF	12032	2F00	R	–	Uint16	Day trending	Number of new records in trending buffer not yet read by the Modbus master.
12040...12041	2F08...2-F09	12041...12042	2F09...2F0-A	R	–	Float32	Hour value	Reading hour values Each reading decrements the counter at address 12030.
12042	2F0A	12043	2F0B	R	–	Uint16	Hour value status	Status: • 0x0000 - Data not initialized • 0x0001 - Data invalid • 0x0002 - Data valid • 0x0003 - Power supply loss after this value • 0x0004 - Injection disable after this value

Trending – For individual channels (Continued)

Address		Register		R/W	Unit	Type	Range	Description
dec	hex	dec	hex					
								• 0x0005 - Power supply loss and injection disable after this value
12043...12044	2F0B...2-F0C	12044...12045	2F0C...2-F0D	R	–	Float32	Day value	Reading day values Each reading decrements the counter at address 12031.
12045	2F0D	12046	2F0E	R	–	Uint16	Day value status	Status: • 0x0000 - Data not initialized • 0x0001 - Data invalid • 0x0002 - Data valid • 0x0003 - Power supply loss after this value • 0x0004 - Injection disable after this value • 0x0005 - Power supply loss and injection disable after this value

NOTE:

Applicable for IFL12MC, IFL12LMC, and IFL12MCT.

Channel-1:

- Block read 12030-12031 to read the number of new records (hourly and daily).
- Block read 12040-12045 to read the trend values and status (hourly and daily).

Other Channels:

Operator can access data from other channels by adding an offset of 30 to each register number. For example, to access Channel-2, operator would read registers 12060-12061 and 12070-12075.

Logging

Address		Register		R/W	Unit	Type	Range	Description
dec	hex	dec	hex					
19996..-.19997	4E1-C...4E1-D	19997...-19998	4E1D...4-E1E	R	–	Uint32	–	Roll over counter
19998..-.19999	4E1-E...4E1F	19999...-20000	4E1F...4-E20	R	–	Uint32	1...240	Number of event records
20001	4E21	20002	4E22	R	–	Uint16	–	Most recent record number
20002..-.20013	4E22...-4E2D	20003...-20014	4E23...4-E2E	R	–	Record	–	Record 1
20014..-.20025	4E2-E...4E39	20015...-20026	4E2F...4-E3A	R	–	Record	–	Record 2
...								
20710..-.20721	50E6...-50F1	20711...-20722	50E7...50-F2	R	–	Record	–	Record 60
22870..-.22881	5956...-5961	22871...-22882	5957...59-62	R	–	Record	–	Record 240

Alarm event records

Each event is stored using two records:

- A "primary" record, which is created when the insulation alarm occurs. This contains the insulation value.
- A "secondary" record, which is created for the following type of events:
  - Acknowledged insulation alarm
  - Transient insulation alarm
  - Power failure or power cycle
  - Toroid disconnect
  - Locating signal unavailable [22]
  - Product or channel error
  - Automatic commission initiation

Description of an Event Record in the Log

Register	Unit	Type	Range	Description
Word 1	–	Uint16	1...65535	Event record number
Word 2 Word 3 Word 4 Word 5	–	Uint64	–	Time tagging of event (using the same code as for the product date/time)
Word 6 Word 7	–	Uint32	• 0….1 • 0x40, 0x20 • 10000...10023, 1110...1134	Record identifier: • Word 6, most significant byte: information for primary/secondary record. This field takes the value 1 for the primary record and value 0 for the secondary record. • Word 6, least significant byte: type of data stored in the Value field. • Word 7: address of the Modbus register that is the source of the data in the Value field.
Word 8 Word 9 Word 10 Word 11	–	Uint64	–	Depending on the type of record (primary or secondary): • Primary record (when the event occurs): Insulation resistance value (in Ohm) when the event occurred (encoded in Float32 in the last 2 registers). • Secondary record (for the earlier list of events) (encoded in Uint32 in the last 2 registers)
Word 12	–	Uint16	1...65534	Primary/secondary record identifier for the event: • In the case of a primary record for an event, this identifier is an odd integer; numbering starts at 1 and the number is incremented by 2 for each new event. • In the case of a secondary record for an event, this identifier is equal to the primary record identifier plus 1.

Example of an event

The next 2 records relate to an example insulation alarm that occurred on October 1, 2010 at 12:00 pm and was acknowledged at 12:29 pm.

(22) Applicable for IFL12MC, IFL12LMC, and IFL12MCT

Record number: 1

Address		Register		Unit	Type	Value	Description
dec	hex	dec	hex				
20002	4E22	20003	4E23	–	Uint16	1	Record number
20003	4E23	20004	4E24	–	Uint64	• 10 • 0 • 10 • 1 • 12 • 0 • 0	Date when insulation alarm occurred (October 1, 2010, 12:00 pm)
20007	4E27	20008	4E28	–	Uint32	• 1 • 0x40 • 10000	Record identifier: • Primary record plus secondary record • Float32 value (insulation resistance) • Value of register 10000 (register for insulation resistance monitoring)
20009	4E29	20010	4E2A	Ohm	Uint64	10000	Insulation resistance value at the time of the insulation alarm
20013	4E2D	20014	4E2E	–	Uint16	1	Secondary record identifier for the event

Record number: 2

Address		Register		Unit	Type	Value	Description
dec	hex	dec	hex				
20014	4E2E	20015	4E2F	–	Uint16	2	Record number
20015	4E2F	20016	4E30	–	Uint64	• 10 • 0 • 10 • 1 • 12 • 29 • 0	Date when insulation alarm acknowledged (October 1, 2010, 12:29 pm)
20019	4E33	20020	4E34	–	Uint32	• 1 • 0x20 • 1112	Record identifier: • Secondary record • Uint32 value (alarm acknowledged) • 1112 register value (channel status).
20021	4E35	20022	4E36	–	Uint64	8	Value of insulation alarm register at the time of insulation alarm acknowledgement
20025	4E39	20026	4E3A	–	Uint16	2	Secondary record identifier for the event

Date and time (TI081 format)

The following structure is used for date-time information exchange using Modbus protocol.

The date/time are encoded in 8 bytes as follows:

b15	b14	b13	b12	b11	b10	b09	b08	b07	b06	b05	b04	b03	b02	b01	b00	Word
0	0	0	0	0	0	0	0	R4	Y	Y	Y	Y	Y	Y	Y	Word 1
0	0	0	0	M	M	M	M	WD	WD	WD	D	D	D	D	D	Word 2
SU	0	0	H	H	H	H	H	iV	0	mn	mn	mn	mn	mn	mn	Word 3
ms	ms	ms	ms	ms	ms	ms	ms	ms	ms	ms	ms	ms	ms	ms	ms	Wrod 4

- R4: Reserved bit (reserved by IEC870-5-4), set to 0
- Y - Years
  - 1 byte
  - Value from 0...127 (1/1/2000 to 31/12/2127)
- M - Months
  - 1 byte
  - Value from 1...12
- D - Days
  - 1 byte
  - Value from 1...31
- H - Hours
  - 1 byte
  - Value from 0...23
- mn - Minutes
  - 1 byte
  - Value from 0...59
- ms - Milliseconds
  - 2 byte
  - Value from 0...59999

The following fields are in CP56Time2a standard and are considered as optional:

- WD - Week Day
  - If not used, set to 0 (1 = Sunday, 2 = Monday...)
  - Value from 1...7
- SU - Summertime
  - If not used, set to 0 (0 = standard time, 1 = summertime)
  - Value from 0...1
- iV - Validity of the information contained in the structure
  - If not used, set to 0 (0 = valid, 1 = not valid or not synchronized in system)
  - Value from 0...1

This information is encoded in binary form.

Maintenance

Safety precautions

The following safety precautions must be thoroughly implemented before attempting to commission the system, repair electrical equipment or carry out maintenance.

Carefully read and follow the safety precautions described below.

⚠⚠ DANGER

HAZARD OF ELECTRIC SHOCK, EXPLOSION, OR ARC FLASH

- Apply appropriate Personal Protective Equipment (PPE) and follow safe electrical work practices. See NFPA 70E, CSA Z462 or other local standards.
- Turn off all power supplying this device and the equipment in which it is installed before working on or in the equipment.
- Always use a properly rated voltage sensing device to confirm that all power is off.

Failure to follow these instructions will result in death or serious injury.

NOTICE

EQUIPMENT DAMAGE

- Do not open this unit.
- Do not attempt to repair any components of this product or any of its accessory products.

Failure to follow these instructions can result in equipment damage.

Product status light indicator

If the **Product status** light indicator is red, there is an error in the power system or your device.

The error is one of the following cases:

- Auto test not OK
- Product error
- System error
- No toroid
- Toroid disconnect
- Locating signal unavailable [23]

Troubleshooting

There are some checks you can perform to try to identify potential issues with the device's operation.

The following table describes potential problems, their possible causes, checks you can perform and possible solutions for each. After referring to this table, if you

(23) Applicable for IFL12MC, IFL12LMC, and IFL12MCT

cannot resolve the problem, contact your local Schneider Electric sales representative for assistance.

Potential problem	Possible cause	Possible solution
The device displays nothing when switched on.	No power supply to the device.	Check that the auxiliary power supply is present.
	The auxiliary power supply is not compliant.	Check the auxiliary voltage.
The device notified an insulation fault, but your system shows no signs of abnormal behavior.	The insulation alarm threshold is not appropriate.	Check the value of the insulation alarm threshold. Modify the insulation alarm threshold as appropriate.
You deliberately created an insulation fault, but the device failed to detect it.	The resistance value used to simulate the fault is greater than the value of the insulation alarm threshold.	Use a resistance value that is lower than the insulation alarm threshold or modify the insulation alarm threshold.
	The fault is not detected between neutral and ground.	Start again ensuring you are between neutral and ground.
IMD detecting fault, the device is not	The insulation alarm threshold is not appropriate.	Check the value of the insulation alarm threshold. Modify the insulation alarm threshold as appropriate.
	There are faults on the same phase on several feeders and insufficient signal to locate fault with the selected device threshold.	
	Fault is on an ungrounded system location not monitored by the device, such as the bus between the branches	Check for insulation fault upstream of the device with the mobile fault location kit.
	IMD network settings not configured for compatibility with the device.	Ensure that IMD network settings is configured. See Network configuration, page 34 for more information.
Device alarming but IMD not detecting fault	The insulation alarm threshold is not appropriate.	Check the value of the insulation alarm threshold. Modify the insulation alarm threshold as appropriate.
	Ungrounded system insulation may have changed over time or under different conditions.	Review insulation resistance history on the IMD and identify if its threshold needs changes.
	IMD network settings not configured for compatibility with the device.	Ensure that IMD network settings is configured. See Network configuration, page 34 for more information.
Alarm relay behaviour inverted (off when should be on, or vice versa)	Incorrect relay wiring	Change relay wiring to provide the expected relay behaviour.
Alarm still on even after fault fixed	Second fault exists on indicated branch circuit (same live conductor, same feeder)	Check and correct the second fault.
Nuisance alarms	Highly disturbed ungrounded power systems with potential power quality issues	Check the value of the filtering. Modify the filtering as appropriate.
Slow device response time	The filtering is not appropriate.	Check the value of the filtering. Modify the filtering as appropriate.
The product status LED is red and the display indicates that an error occurred during the auto-test.	Internal error	Briefly disconnect the auxiliary power supply to the device.
Although the device is being supplied with power, the product status LED does not light up.	Faulty indicator light.	Restart the auto-test and check that the product status LED lights up briefly.
The alarm LED does not light up in the event of a fault.	Faulty indicator light.	Restart the auto-test and check that the alarm LED lights up briefly.
Device displays Locating signal unavailable (LSU)	Voltage input from IM400 is disconnected.	Connect Voltage input to the upstream IM400 network injection terminals.
	If IM400 is in disabled injection, injection inhibition or inoperative product.	Refer to IM400 user manual for troubleshooting.
	More than 2 frank faults (0 ohm resistance fault) in the feeders.	Identify and isolate the faulty feeders which is driving the resistance low.

Functional safety standards compliance

Safety standards compliance requirements

Introduction

The device is SIL 2 and SIL 1 certified in compliance with IEC 61508: 2010 (standard related to Functional Safety) and IEC 61557-15: 2014 (based on IEC 61508, specific for IT systems using IMDs and IFLs devices).

The classification of safety function:

Function	SIL
RLW (Remote Location Warning) Used with relay output	SIL 1
RLW (Remote Location Warning) Used with relay and Modbus output	SIL 2

The following model and commercial references are certified:

Model	Commercial Reference
IFL12MC	IMDIFL12MC
IFL12MCT	IMDIFL12MCT
IFL12LMC	IMDIFL12LMC

Scope

The device and accessories (voltage adaptors) certification is valid if the installation and wiring of the system abides with the description explained.

Product Setup

To comply with the Functional Safety Standards requirements, the device must be configured using the following parameters, accessible by selecting **Menu > Settings > I/O Config**:

Parameter	Description	Value
Ins. Al. Relay	Insulation alarm relay	**FS**
Ack. Al. Relay	Allow triggering relays when acknowledging alarm	**OFF**
Test w. Relays	Toggle Relays during manual auto test	**OFF**

For detailed information about these parameters, see I/O configuration, page 40.

Set the following register value using Modbus interface:

Settings

Address		Register		R/W	Unit	Type	Range	Description
dec	hex	dec	hex					
1102	44E	1103	44F	R	–	Uint16	–	Product alarm status • Bit 1...12 - Channel status for channel 1 to 12 respectively This bit is set for the corresponding channel for any of the following states: ◦ Active alarm ◦ Alarm acknowledged ◦ Toroid disconnect ◦ First measurement ◦ Channel error • Bit 13 - System error This bit is set for the following states: ◦ Voltage signal unavailable ◦ Toroid disconnect ◦ No toroid • Bit 14 - Product error This bit is set for Product failure state.
1103	44F	1104	450	R	–	Uint16	–	Compliment for product alarm status
1104...1105	450...451	1105...1106	451...452	R	–	Uint32	0...0XF-FFFFF-FF	Status counter

For detailed information about these registers, see .

Product installation and wiring

Relays

The device provides a configuration option to comply with safety and application standards. The insulation alarm relay used as a actuator provide a global safety function.

You can activate this function through a relay setting: **Menu > Settings > I/O Config > Ins. Al. Relay**

The insulation alarm relay output is used to alarm PLC about an insulation fault in a channel group of 12 channel. Using multiple devices in the same system, you can identify the faulty group of 12 channels.

PLC

For the system to detect all the product states, the device must be connected to a PLC or equivalent device. For the PLC to cover the state of all the products the following configuration must be implemented:

Operation		Insulation alarm relay
Normal operation	No insulation fault	Closed
	Insulation alarm	Open
Inoperative product		Closed

The Modbus alarm output is used to alarm PLC about an insulation fault in any channel.

PLC must check every 1 second of Status Counter Register (1105) that it registers new value. The new values of Status Counter Register (1105) indicates that the communication is active and the system is functioning as expected. If the value is not changed, PLC must warn an insulation fault. The respective bits of Localization Modbus Register (1103) and Compliment Localization Modbus Register (1104) should compliment. If it does not compliment, PLC must warn an insulation fault.

Commissioning for functional safety standards compliance

Introduction

In a Functional Safety Standards-compliant installation, you must test the complete device and system setup before deployment of the installation.

Commissioning process

Stage	Description
1	Validate the device wiring to the description in the Product Installation and Wiring section. See Product installation and wiring, page 65.
2	Validate the device settings to the description in the Product Setup. See Safety standards compliance requirements, page 64.

Using Modbus/98 protocol to perform commissioning

The device's communication protocol is compliant with the requirements of IEC60730-1:Annex H (SW Class B). Using this communication protocol in place of the standard Modbus interface provides functional safe channel between the device and the system.

You can confirm the device setup and commissioning procedure (Insulation Monitoring and Insulation Fault Detection Testing) by ensuring the values set on the device are as expected (Modbus/98 Write function) and the values read from the device are reliable (according to Class B IEC 60730-1 annex H).

The protocol is an add-on to the standard Modbus protocol (as defined in the Modbus Serial Line Protocol and Implementation Guide v1.02 from Modbus.org) using a custom function code: 98 (0x62). Refer to the dedicated Modbus/98 protocol document for a detailed description of the protocol and implementation guide of the master driver.

The protocol relies on a session mechanism to enclose the communication in a safe structure, as follows:

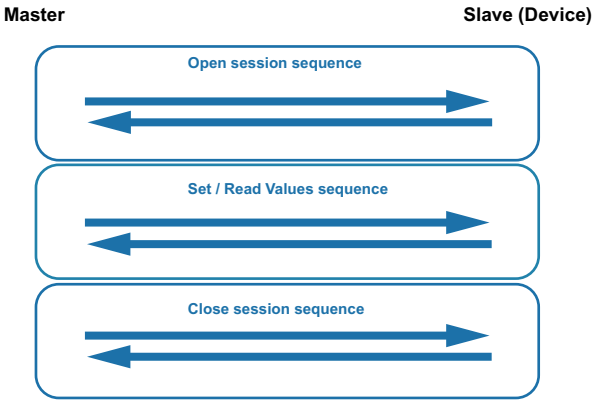

Multiple Modbus/98 Read/Write operations can happen during an active session, but it is mandatory to close the session at the end of a given sequence.

NOTE: The master in the system must confirm that the sessions are closed. A timeout set during the open session sequence allows you to automatically close a session after a given time.

Using this protocol provides the following features:

- Data integrity: The integrity of the data transmitted and processed by the device across the device and system failures, by using dedicated error management mechanisms embedded in the protocol.
- Communication sync: The transmissions are sequential and in a valid time window.
- Secure link: The master and slave devices identify both ends of the active communication session using unique tokens re-initialized at every session.

You can use both protocols (standard and /98) at the same time in the device. But to comply with all the functional safety standards requirements the system which integrates the device must do the following configuration sequence (using Modbus/98 protocol):

Parameter	Address		Register		Value	Comment
	dec	hex	dec	hex		
Lock standard Modbus	754	2F2	755	2F3	1 (ON)	Read function is still active
Lock HMI with password	3014	BC6	3015	BC7	0000...999-9	Set password
	3015	BC7	3016	BC8	1	Activate password protection

NOTE: The listed parameters are stored in non-volatile memory and are therefore persistent over a power cycle.

The device cannot confirm if the received data is correct and applicable to the system. It can only confirm the integrity of the received data.

Specifications

This section provides specifications for the device.

Auxiliary power

AC	IFL12C, IFL12MC, and IFL12MCT	• 100...300 V LN / 440 V LL ± 15% 50/60 Hz • 80...120 V LN ± 15% 400 Hz ◦ < 22 VA at 440 V ◦ < 8 VA at 230 V
DC	IFL12C, IFL12MC, and IFL12MCT	100...440 V ± 15% < 10 W
	IFL12LMC	24...48 V ± 15% < 4 W

Monitored network (Maximum voltage)

AC	• 480 V (24) • 1000 V (25)
DC	• 480 V (26) • 1200 V (25)
Maximum leakage capacitance	150 µF

Electrical

Insulation resistance range	100 Ω...250 kΩ (24)
Capacitance range	0.1...150 µF (24)
Filtering range	5 s, 40 s, and 400 s
Response time	As per filtering setting
Accuracy	As per IEC 61557–9
Threshold	0.2...200 kΩ (24) High, Medium, and Low (27)
Hysteresis	± 20%
Relay configuration	• Standard • Failsafe
Relay maximum AC voltage / current	250 V / 6 A
Relay maximum AC load	1500 VA
Relay maximum DC voltage / current	48 V / 1 A

Mechanical

Weight	0.55 kg (1.12 lb)
Mounting position	Vertical orientation only
IP degree of protection	• IP20 : Other sides • IP54 : Front
Installation category	• 300 V, CAT III, Pollution degree 2 • 600 V, CAT II, Pollution degree 2

(24) Applicable for IFL12MC, IFL12LMC, and IFL12MCT
(25) Applicable for IFL12C, IFL12MC, IFL12LMC, and IFL12MCT with voltage adaptor IFL12VA1T
(26) Applicable for IFL12MC, IFL12LMC,and IFL12MCT
(27) Applicable for IFL12C

Environment

Operating temperature	-25...70 °C (-13...158 °F)
RH non-condensing	5...95%
Maximum dewpoint	37 °C (99 °F)
Storage temperature	-40...85 °C (-40...185 °F)
Operating altitude	≤ 3000 m (9843 ft)
Usage	For indoor and outdoor use

Standards

Product	IEC 61557-9
Safety	IEC/UL 61010-1
EMC	• IEC 61326-2-4 • IEC 61326-3-1 • IEC 61000-6-2 • IEC 61000-6-4
Installation	IEC 60364-4-41

China Standard Compliance

This product complies with the following standards in China:

BS/EN/IEC 61557-9 Electrical safety in low voltage distribution systems up to 1 000 V a.c. and 1 500 V d.c. - Equipment for testing, measuring or monitoring of protective measures - Part 9: Equipment for insulation fault location in IT systems

Schneider Electric
35 rue Joseph Monier
92500 Rueil Malmaison
France

+ 33 (0) 1 41 29 70 00

www.se.com

© 2026 – 2026 Schneider Electric. All rights reserved.

7EN02-0406-06