Lexium18P

AC Servo Drive

User Guide

PKR6845702-06
FW Version: V02.07.0X
2/2026

www.se.com

Legal Information

The information provided in this document contains general descriptions, technical characteristics and/or recommendations related to products/solutions.

This document is not intended as a substitute for a detailed study or operational and site-specific development or schematic plan. It is not to be used for determining suitability or reliability of the products/solutions for specific user applications. It is the duty of any such user to perform or have any professional expert of its choice (integrator, specifier or the like) perform the appropriate and comprehensive risk analysis, evaluation and testing of the products/solutions with respect to the relevant specific application or use thereof.

The Schneider Electric brand and any trademarks of Schneider Electric SE and its subsidiaries referred to in this document are the property of Schneider Electric SE or its subsidiaries. All other brands may be trademarks of their respective owner.

This document and its content are protected under applicable copyright laws and provided for informative use only. No part of this document may be reproduced or transmitted in any form or by any means (electronic, mechanical, photocopying, recording, or otherwise), for any purpose, without the prior written permission of Schneider Electric.

Schneider Electric does not grant any right or license for commercial use of the document or its content, except for a non-exclusive and personal license to consult it on an "as is" basis.

Schneider Electric reserves the right to make changes or updates with respect to or in the content of this document or the format thereof, at any time without notice.

To the extent permitted by applicable law, no responsibility or liability is assumed by Schneider Electric and its subsidiaries for any errors or omissions in the informational content of this document, as well as any non-intended use or misuse of the content thereof.

Table of Contents

Safety Information....9
Safety Information....9
Before You Begin....9
Start-up and Test....10
Operation and Adjustments....11
About the Book....12
Certification....19
Introduction....21
Overview of Lexium 18P servo drive / servo motor systems....21
About the Servo Drive....22
Nameplate....22
Description of type code....23
Designation of each part of the servo drive....24
About the Servo Motor....25
Nameplate....25
Description of type code....26
Designation of each part of servo motor....27
Confirmation of a servo drive and its related servo motor....28
Selection....31
Selection of servo drive....31
Servo drive specifications....31
Internal block diagram of the servo drive....36
Servo Drive Ratings....37
Servo Drive Dimensions....38
Servo Motor Selections....39
Servo Motor Specifications....39
Servo Motor Ratings....40
Allowable Loads of Servo Motor Output Shaft....43
Servo Motor Dimensions/Overload Characteristics/Speed-Torque Curve....44
System Accessories....71
Example of standard connection between servo systems and peripheral equipment....71
List of Accessories....72
Plug....75
Motor Power Cables/Holding Brake Control Cables....78
Motor encoder cables....85
External braking resistor....87
Input filter....89
Motor Protection Circuit Breakers....90
Installation....93
Installation Precautions....93
About Electromagnetic Compatibility (EMC)....93
Residual Current Devices....94
Required Cables....95
Mounting of the Drive....97
Unpacking and Checking....97

Switchgear 97
Installation direction 97
Mounting Distances, Ventilation 98
Dimensions of the Mounting Holes 99
Mounting the Motor 100
Unpacking and Checking 100
Installation direction 100
For Use with Machinery 100
Additional Notes 101
Wiring 102
Wiring of the Servo Drive 102
Notes 102
Overview of the Connections of the Servo Drives 103
Connectors and Terminals of the Servo Drives 104
Connection Methods of the Mains Supply in a Main Circuit of the Servo Drives 104
Connecting the Braking Resistor 106
Connecting the Motor Output Terminal 109
Signal Description of the Servo Drive Signal Connector (CN1) 114
Connection of the Servo Drive Signal Connector (CN1) 115
Connection of the Servo Drive Encoder Connector (CN2) 120
Connection of the Servo Drives to the Host Computer (CN3) 122
Connection of the Servo Drive Modbus Connection Terminal (CN4) 123
Standard Connection Methods 125
Standard Connection of the Electrical Gear Mode 125
Standard Connection of the Velocity (V/Vz) Mode 126
Standard Connection of the Torque (T/Tz) Mode 127
Standard Connection of the Motion Sequence Mode 128
Standard Connection of the Internal Programming (Script) Mode 129
Front Panel 130
Front Panel 130
Overview of the Front Panel 130
Composition of Each Parameter Set on the Front Panel 131
Operation of the Front Panel 131
7-segment LED Display 132
Front Panel Locking 134
Operation of the Parameter Set OP on the Front Panel 134
JOG Operation 135
Force Output Operation (FCo) 137
Easy Tuning 138
Operation of the Adaptive Control Loop Parameters 139
Drive Factory Reset 140
Restoring Control Loop Parameters to Factory Settings 141
Operation of the Parameter Set MON on the Front Panel 142
Displayable Drive Status Information 143
Selecting and Displaying Drive Status Information 147
Setting the Default Status Information Displayed after Drive Power-on 148
Displaying the Drive's Current/Historical Fault Records 149

Monitoring the Drive's I/O Point Status Information 150
Operation of the Parameter Set Conf on the Front Panel 151
Setting and Operating Numeric Parameters 151
Setting and Operating Selective Parameters 152
Warm Starting the Drive from the Front Panel 153
Operation 154
Access Channels 154
Overview of the Access Channels 154
Exclusive Access Channels 154
Operating State of the Device 155
State Diagram 155
Definition of the Operating State 156
Error class 156
Definition of State Transitions 157
Input and Output Settings 158
Connection Methods 158
Setting Methods of I/O Parameters 159
List of Input Functions 160
List of Output Functions 162
Factory Settings for I/O Functions 164
Parameterization of Software Filtering for Signal Inputs 166
Setting of Basic Operating Functions 167
Servo Enable 167
Selection of the Direction of Rotation of the Motors 169
Absolute System 169
Setting the Limit Switches 172
Reset Limit Error 173
Motor Holding Brake 175
Braking Resistors 178
JOG 181
Inspection and Precautions Prior to a JOG 181
Perform JOG via the HMI front panel integrated with the device: 182
Performing JOG via Input Terminals 185
Setting of Velocity Profile During a JOG 186
Electronic Gear Control 188
Electronic Gear Control Block Diagram 188
Pulse Input Signal Processing 189
Input Pulse Inhibition Functions 191
Electronic Gear Control 192
Smoothing function 195
Direction of Operation Control 196
Setting Pulse Following Modes 197
Special Functions 199
Monitoring Functions 203
Velocity Control 208
Velocity Control Block Diagram 208
Command Selection for Velocity Control 209
Analog Input Control 210
Analog Input Functions 215
Smoothing function 217

Special Functions 222
Monitoring Functions 223
Torque Control 227
Torque Control Block Diagram 227
Command Selection for Torque Control 228
Analog Input Control 229
Analog Input Functions 234
Smoothing function 236
Special Functions 238
Monitoring Functions 241
Modulo Function 243
Motion Sequence (MS) Function 251
Brief Description of MS Function 251
Data Set Composition 252
How to Edit Data Sets via HMI 257
Starting the Data Set in Continuous Mode 259
Start single data set 261
Auxiliary Functions during Operation 263
Setting of the Halt Function 263
Setting of the Quick Stop Function settings 264
Setting of the Stop Mode in the Case of Disable and Error 265
Setting the Motor’s Maximum Continuous Load Rate 267
Holding Brake Control Function 268
Software Limit Function 269
Hardware Limit Function 271
Analog Encoder Output 272
Velocity Limitation Function 274
Torque Limitation Function 277
Operation Mode Homing 280
Overview 280
Homing Methods 282
Parameterization 286
PWM Frequency of the Power Stage 287
Flux Weaken 289
DOB Disturbance Compensation 291
Friction Compensation 292
Carrier Frequency Switching 295
Adaptive Trajectory Guider 295
Position Comparison 296
Tuning 302
Types and Basic Procedure of Tuning 302
Tuning 302
Type of Tuning 302
Basic Procedure for Tuning 304
Safety Precautions for Tuning 304
Selecting the Control Loop Parameter Model 305
Easy Tuning 306
Overview 306
Operation method 306
Comfort Tuning 307
Overview 307

Operation method 307
Adaptive control 307
Overview 307
Service conditions 310
Standard adaptive control mode 310
Passive adaptive control mode 312
Active Adaptive Control Mode 313
Adaptive Trajectory Tracking Control Algorithm Mode 314
Overview 314
Core Parameters of the ATT Algorithm 314
Usage of the ATT Algorithm 322
Common Fine-tuning Parameters after One-click Self-tuning 324
ATT Algorithm Runaway Protection 324
Auxiliary Control Parameters of the ATT Algorithm 325
Example of connecting load directly to motor 327
Adaptive Notch Filter 328
Overview 328
Operation method 328
Resonance Detection Parameter Settings 329
Three Steps for Servo Commissioning 331
Manual Gain Adjustment (Basic) 343
Overview 343
Servo Control Loop Block Diagram Overview 343
Conversion of Adaptive Control Loop Parameters to Serial PID Control Loop Parameters 343
Optimization of Velocity Loop 344
Optimization of Position Loop 350
Stiffness Switching 352
Switch control between control loop parameter sets 1 and 2 352
Automatic Transition to Control Loop Parameter Set 3 356
Adaptive Control Loop Stiffness Switching 362
Manual Gain Adjustment (Advanced) 364
Feed-forward adjustment 364
Manual Mechanical Resonance Suppression 366
End vibration suppression 372
Diagnosis 374
Fault reset via HMI 374
Acquisition of operation state 374
Obtaining Current Warning Message 375
Obtaining Current Error Message 377
Obtaining Historical Error Records 379
Diagnosis via Output Point 381
Acquisition of operation state 381
Acquisition of Fault State 382
Fault Reset Alarm 383
Fault reset via HMI 383
Fault reset via input terminal 383
Error Message 385
Description of Error Message 385
Error Code List 386

Parameters 418
Parameter overview 418
P0 - Basic settings 432
P1 - Gain settings 440
P2 - Vibration suppression setting 459
P3 - I / O settings 466
P4 - Velocity and Torque Settings 486
P5 - Extended settings 494
P6 - Special settings 510
P7 - User-defined monitoring parameters 527
Other Parameters 530
Pu User-defined internal programming parameters 532
Internal motion task set 536
Communication 543
RS-485 communication hardware interface 543
RS-485 hardware interface 544
RS-485 communication parameter definition 545
RS-485 communication parameter setting 546
MODBUS communication protocol 546
MODBUS function code 546
FC 3 (0x03) - read multiple registers 547
FC 16 (0x10) - write multiple registers 549
FC 23 (0x17) - read / write multiple registers 551
Reading and writing of parameters 553
Readable parameters 553
Writable parameters 554
Expression of decimal 554
Storing values 554
Reading of servo drive state 555
Function of communication status node guard 558
RS-485 communication specification 559
Glossary 561
Index 567

Safety Information

Safety Information

Important Information

Read these instructions carefully, and look at the equipment to become familiar with the device before trying to install, operate, service, or maintain it. The following special messages may appear throughout this documentation or on the equipment to warn of potential hazards or to call attention to information that clarifies or simplifies a procedure.

The addition of this symbol to a “Danger” or “Warning” safety label indicates that an electrical hazard exists which will result in personal injury if the instructions are not followed.

This is the safety alert symbol. It is used to alert you to potential personal injury hazards. Obey all safety messages that follow this symbol to avoid possible injury or death.

⚠ DANGER

DANGER indicates a hazardous situation which, if not avoided, **will result in** death or serious injury.

⚠ WARNING

WARNING indicates a hazardous situation which, if not avoided, **could result in** death or serious injury.

⚠ CAUTION

CAUTION indicates a hazardous situation which, if not avoided, **could result** in minor or moderate injury.

NOTICE

NOTICE is used to address practices not related to physical injury.

Please Note

Electrical equipment should be installed, operated, serviced, and maintained only by qualified personnel. No responsibility is assumed by Schneider Electric for any consequences arising out of the use of this material.

A qualified person is one who has skills and knowledge related to the construction and operation of electrical equipment and its installation, and has received safety training to recognize and avoid the hazards involved.

Before You Begin

Do not use this product on machinery lacking effective point-of-operation guarding. Lack of effective point-of-operation guarding on a machine can result in serious injury to the operator of that machine.

⚠WARNING

UNGUARDED EQUIPMENT

- Do not use this software and related automation equipment on equipment which does not have point-of-operation protection.
- Do not reach into machinery during operation.

Failure to follow these instructions can result in death, serious injury, or equipment damage.

This automation equipment and related software is used to control a variety of industrial processes. The type or model of automation equipment suitable for each application will vary depending on factors such as the control function required, degree of protection required, production methods, unusual conditions, government regulations, etc. In some applications, more than one processor may be required, as when backup redundancy is needed.

Only you, the user, machine builder or system integrator can be aware of all the conditions and factors present during setup, operation, and maintenance of the machine and, therefore, can determine the automation equipment and the related safeties and interlocks which can be properly used. When selecting automation and control equipment and related software for a particular application, you should refer to the applicable local and national standards and regulations. The National Safety Council's Accident Prevention Manual (nationally recognized in the United States of America) also provides much useful information.

In some applications, such as packaging machinery, additional operator protection such as point-of-operation guarding must be provided. This is necessary if the operator's hands and other parts of the body are free to enter the pinch points or other hazardous areas and serious injury can occur. Software products alone cannot protect an operator from injury. For this reason the software cannot be substituted for or take the place of point-of-operation protection.

Ensure that appropriate safeties and mechanical/electrical interlocks related to point-of-operation protection have been installed and are operational before placing the equipment into service. All interlocks and safeties related to point-of-operation protection must be coordinated with the related automation equipment and software programming.

NOTE: Coordination of safeties and mechanical/electrical interlocks for point-of-operation protection is outside the scope of the Function Block Library, System User Guide, or other implementation referenced in this documentation.

Start-up and Test

Before using electrical control and automation equipment for regular operation after installation, the system should be given a start-up test by qualified personnel to verify correct operation of the equipment. It is important that arrangements for such a check are made and that enough time is allowed to perform complete and satisfactory testing.

⚠WARNING

EQUIPMENT OPERATION HAZARD

- Verify that all installation and set up procedures have been completed.
- Before operational tests are performed, remove all blocks or other temporary holding means used for shipment from all component devices.
- Remove tools, meters, and debris from equipment.

Failure to follow these instructions can result in death, serious injury, or equipment damage.

Follow all start-up tests recommended in the equipment documentation. Store all equipment documentation for future references.

Software testing must be done in both simulated and real environments.

Verify that the completed system is free from all short circuits and temporary grounds that are not installed according to local regulations (according to the National Electrical Code in the U.S.A, for instance). If high-potential voltage testing is necessary, follow recommendations in equipment documentation to prevent accidental equipment damage.

Before energizing equipment:

- Remove tools, meters, and debris from equipment.
- Close the equipment enclosure door.
- Remove all temporary grounds from incoming power lines.
- Perform all start-up tests recommended by the manufacturer.

Operation and Adjustments

The following precautions are from the NEMA Standards Publication ICS 7.1-1995:

(In case of divergence or contradiction between any translation and the English original, the original text in the English language will prevail.)

- Regardless of the care exercised in the design and manufacture of equipment or in the selection and ratings of components, there are hazards that can be encountered if such equipment is improperly operated.
- It is sometimes possible to misadjust the equipment and thus produce unsatisfactory or unsafe operation. Always use the manufacturer's instructions as a guide for functional adjustments. Personnel who have access to these adjustments should be familiar with the equipment manufacturer's instructions and the machinery used with the electrical equipment.
- Only those operational adjustments required by the operator should be accessible to the operator. Access to other controls should be restricted to prevent unauthorized changes in operating characteristics.

About the Book

Document Scope

This manual describes technical characteristics, installation, commissioning, operation and maintenance of the servo drive Lexium 18P.

Validity Note

The characteristics of the products described in this document are intended to match the characteristics that are available on www.se.com. As part of our corporate strategy for constant improvement, we may revise the content over time to enhance clarity and accuracy. If you see a difference between the characteristics in this document and the characteristics on www.se.com, consider www.se.com to contain the latest information.

Available Languages of the Document

The document is available in these languages:

- English
- Chinese

Product Related Information

The use and application of the information contained herein require expertise in the design and programming of automated control systems.

Only you, the user, machine builder or integrator, can be aware of all the conditions and factors present during installation and setup, operation, repair and maintenance of the machine or process.

You must also consider any applicable standards and/or regulations with respect to grounding of all equipment. Verify compliance with any safety information, different electrical requirements, and normative standards that apply to your machine or process in the use of this equipment.

Many components of the equipment, including the printed circuit board, operate with mains voltage, or present transformed high currents, and/or high voltages.

The motor itself generates voltage when the motor shaft is rotated.

⚠⚠DANGER

ELECTRIC SHOCK, EXPLOSION, OR ARC FLASH

- Only professionals who are familiar with and understand the contents of this manual and all other pertinent product documentation are allowed to work on and with this product. Such persons are required to have sufficient technical training, knowledge and experience and be able to foresee and detect potential hazards that may be caused by using the product, through modifying the settings and the mechanical, electrical and electronic equipment of the entire system in which the product is used.
- It is the equipment manufacturer's responsibility to comply with all applicable rules and regulations regarding system grounding.
- Many components of the equipment, including the printed circuit board, operate with mains voltage. Do not touch and always use insulated tools.
- Do not touch live, unprotected parts or terminals.
- A voltage is generated when the motor shaft is turned by an external force. Therefore, you should block the motor shaft to prevent rotation prior to performing any type of work on the drive system.
- Do not create a short-circuit across the DC bus terminals or the DC bus capacitors.
- Remove any cover or door; before installing or removing any accessories, hardware, cables, or wires, it is required to:

- Lock switches in the non-energized position and place a hazard label with such words as "Do Not Turn On" on all power switches.

- Wait 15 minutes to allow the residual energy of the DC bus capacitors to discharge. Do not assume that the DC bus is voltage-free when the DC bus LED (Charge LED) is off.

- Disconnect all equipment including the connected components form the power.

- Install/replace and fix all covers, accessories, hardware, cables, and wires and confirm a proper grounding before connecting to power.
- Use only the specified voltage when operating this equipment and any associated products.

Failure to follow these instructions will result in death or serious injury.

⚠⚠DANGER

ELECTRIC SHOCK CAUSED BY FOREIGN OBJECTS OR DAMAGE

Conductive foreign objects in or damage of the product could lead to accidental energization.

- Do not use damaged products.
- Do not allow foreign objects such as chips, screws, or cut wires to enter the product.

Failure to follow these instructions will result in death or serious injury.

This equipment has been designed to operate outside of any area with a risk of explosion. Install this equipment only in areas with no risk of explosion.

⚠DANGER

POTENTIAL FOR EXPLOSION

Install and use this equipment in non-hazardous locations only.

Failure to follow these instructions will result in death or serious injury.

If the power stage is disabled unintentionally, for example as a result of power outage, errors or execution failure, the motor will no longer brake in a controlled way. Overload, errors or incorrect use may cause malfunctioning or premature wear of the holding brake.

⚠WARNING

UNINTENDED MOVEMENT

- Verify that movements without braking effect will not lead to personal injury or property loss.
- Verify the function of the holding brake at regular intervals.
- Do not use the holding brake as a service brake.
- Do not use the holding brake for safety-related purposes.

Failure to follow these instructions can result in death, serious injury, or equipment damage.

Drive systems may perform unanticipated movements due to improper wiring, incorrect setting, incorrect data or other errors.

⚠WARNING

UNINTENDED MOVEMENT

- Perform wiring carefully in accordance with the EMC Specifications.
- Do not operate the product with unclear settings or data.
- Carefully perform commissioning tests.

Failure to follow these instructions can result in death, serious injury, or equipment damage.

⚠ WARNING

LOSS OF CONTROL

- The designer of any control scheme must consider the potential failure modes of control paths and, for certain critical control functions, provide a means to achieve a safe state during and after a path failure. Examples of critical control functions are emergency stop and overtravel stop, power outage and restart.
- Separate or redundant control paths are required for critical control functions.
- System control paths may include communication links. Consideration must be given to the implications of unanticipated transmission delays or failures of the link.
- Observe all accident prevention regulations and local safety guidelines.
- Each implementation of this equipment must be individually and thoroughly tested for proper operation before being placed into service.

Failure to follow these instructions can result in death, serious injury, or equipment damage.

During operation, the metal surface temperature of the product may be higher than 70°C (158°F)

⚠ WARNING

HOT SURFACE

- Avoid contact with high-temperature surfaces in an unprotected state.
- Do not allow combustible or non high-temperature resistant components to approach high-temperature surfaces.
- Ensure sufficient heat dissipation through trial operation with maximum load.

Failure to follow these instructions can result in death, serious injury, or equipment damage.

⚠ WARNING

UNEXPECTED ACTION DUE TO MECHANICAL DAMAGE TO THE MOTOR

- Do not exceed the maximum allowable axial and radial forces on the motor shaft.
- Protect motor shaft from impact.
- Do not exceed the maximum allowable axial force when clamping parts on the motor shaft.

Failure to follow these instructions can result in death, serious injury, or equipment damage.

For additional information, refer to NEMA ICS 1.1 (latest edition), “Safety Guidelines for the Application, Installation, and Maintenance of Solid State Control” and to NEMA ICS 7.1 (latest edition), “Safety Standards for Construction and Guide for Selection, Installation and Operation of Adjustable-Speed Drive Systems” or their equivalent governing your particular location.

Measurement of DC bus voltage

The DC bus voltage may exceed 400 Vdc. The DC bus LED is not an indicator of errors of DC bus voltage.

⚠⚠DANGER

ELECTRIC SHOCK, EXPLOSION, OR ARC FLASH

- Do not connect any switch when they are energized.
- Wait 15 minutes to allow the residual energy of the DC bus capacitors to discharge
- Use a properly rated voltage-measurement device for measuring (greater than 400 Vdc).
- If the DC bus capacitor fails to discharge to less than 42 Vdc within 15 minutes, contact your local Schneider Electric representative.
- Do not use the product if the DC bus capacitor fails to discharge properly.
- Do not attempt to repair the product by yourself if the DC bus capacitor fails to discharge properly.
- Do not assume that the DC bus is voltage-free when the DC bus LED (Charge LED) is off.

Failure to follow these instructions will result in death or serious injury.

Terminology

The technical terms, terminology, symbols and the corresponding descriptions in this manual, or those appear in or on the products themselves, are generally derived from the terms or definitions of international standards.

In the areas of functional safety systems, drives and general automation, these may include, but is not limited to, terms such as *Safety, Safety Function, Safe State, Fault, Fault Reset, Malfunction, Failure, Error, Error message, and Danger*.

Among others, these standards include:

Standard	Description
IEC 61131-2:2007	Programmable controllers, part 2: Equipment requirements and tests
ISO 13849-1:2015	Safety of machinery: Safety related parts of control systems. General principles for design.
EN 61496-1:2013	Safety of machinery: Electro-sensitive protective equipment. Part 1: General requirements and tests.
ISO 12100:2010	Safety of machinery - General principles for design - Risk assessment and risk reduction
EN 60204-1:2006	Safety of machinery - Electrical equipment of machines - Part 1: General requirements
ISO 14119:2013	Safety of machinery - Interlocking devices associated with guards - Principles for design and selection

Standard (Continued)	Description
ISO 13850:2015	Safety of machinery - Emergency stop - Principles for design
IEC 62061:2015	Safety of machinery - Functional safety o fsafety-related electrical, electronic, and electronic programmable control systems
IEC 61508-1:2010	Functional safety of electrical / electronic / programmable electronic safety- related systems: General requirements.
IEC 61508-2:2010	Functional safety of electrical / electronic / programmable electronic safety- related systems: Requirements for electrical / electronic / programmable electronic safety-related systems.
IEC 61508-3:2010	Functional safety of electrical / electronic / programmable electronic safety- related systems: Software requirements
IEC 61784-3:2016	Industrial communication networks - Profiles - Part 3: Functional safety field buses - General rules and profile definitions
2006 / 42 / EC	Machinery Directive
2014 / 30 / EU	Electromagnetic Compatibility Directive
2014 / 35 / EU	Low Voltage Directive

In addition, terms used in this document may tangentially be used as they are derived from other standards such as:

Standard	Description
IEC 60034 series	Rotating electrical machines Rotating electrical motor
IEC 61800 series	Adjustable speed electrical power drive systems Adjustable speed electrical power drive system
IEC 61158 series	Digital data communications for measurement and control - Fieldbus for use in industrial control systems Digital data communications for measurement and control – Fieldbus for industrial control systems

Finally, the term “zone of operation” may be used in conjunction with the description of specific hazards, and is similar to hazard zone or danger zone in the Machinery Directive (*2006/42/EC*) and *ISO 12100:2010*.

NOTE: The aforementioned standards may or may not apply to the specific products cited in this documentation. For more information about various standards applicable to the products described herein, see the characteristics tables for those product references.

Cybersecurity Information

At Schneider Electric, we have always considered cybersecurity as key. Our designed approach to security makes our products more resistant to cyber attacks. We have implemented various mechanisms to mitigate threats, reduce vulnerabilities, and protect against data breaches and cyber attacks that could have been avoided. However, the following mitigation measures are still strongly recommended to reduce security risks.

Use controllers and devices only in protected environments to minimize network exposure and ensure that they cannot be accessed from the outside.

Use a firewall to protect your control system network and separate it from other networks.

Use Virtual Private Network (VPN) tunnels if remote access is required.

Restrict access to your development and control system by physical means, operating system features, and others.

Protect your development and control systems with the latest virus detection solutions.

To ensure you are aware of all updates, including details of affected products and remediation plans, subscribe to Schneider Electric's security notification service here:https://www.se.com/en/work/support/cybersecurity/security-notifications.jsp.

Schneider Electric Cybersecurity Best Practices: https://www.se.com/ww/en/download/document/7EN52-0390/.

Information on Non-Inclusive or Insensitive Terminology

As a responsible, inclusive company, Schneider Electric is constantly updating its communications and products that contain non-inclusive or insensitive terminology. However, despite these efforts, our content may still contain terms that are deemed inappropriate by some customers.

Certification

Product, Type	Directive	Harmonized standard
LXM18…motion servo drives BCH18…servo motors VW3…options	LV Directive 2014/35/EU	EN 61800-5-1:2007 + A1:2017 + A11:2021 EN 60034-1:2010/AC: 2010
	EMC Directive 2014/30/EU	EN 61800-3:2004/A1: 2012 EN 60034-1:2010/AC: 2010

UL

Product, Type	Harmonized standard
LXM18P/E…motion servo drives	UL 61800-5-1, 1st Ed. CSA C22.2 No. 274, 2nd Ed.
BCH18…servo motors	UL 1004-1 Rotating Electrical Machines – General Requirements UL 1004-6 Servo and Stepper Motors CSA C22.2 No. 100-14 Motors And Generators

KC

Product, Type	Harmonized standard
LXM18P/E…motion servo drives	KS C 9800-3 : 2017

The following table lists material and description:

Material	Description
LXM18PDU01M2X	LXM18 PTI drive, Ana/MB, 100W 1~220
LXM18PDU02M2X	LXM18 PTI drive, Ana/MB, 200W 1~220
LXM18PDU04M2X	LXM18 PTI drive, Ana/MB, 400W 1~220
LXM18PDU07M2X	LXM18 PTI drive, Ana/MB, 750W 1~220
LXM18PDU10M2X	LXM18 PTI drive, Ana/MB, 1kW 1~220
LXM18PDU15M2X	LXM18 PTI drive, Ana/MB, 1.5kW 1~220
LXM18PDU20M3X	LXM18 PTI drive, Ana/MB, 2kW 3~220
LXM18PDU30M3X	LXM18 PTI drive, Ana/MB, 3kW 3~220

DocuSign Envelope ID: 2D861CCF-AF18-45F2-93BD-F317B3B5E0CC

EU DECLARATION OF CONFORMITY

We : Schneider Electric Industries SAS
35 rue Joseph Monier
Rueil Malmaison 92500 – France

Hereby declare under our sole responsibility that the products:

Trademark	Schneider Electric
Product, Type	LXM18…motion servo drives BCH18…servo motors VW3…options

Are in conformity with the requirements of the following directives and conformity was checked in accordance with the following standards.

Directive	Harmonized standard
LV Directive 2014/35/EU	**EN 61800-5-1: 2007+ A1:2017+ A11:2021** Adjustable speed electrical power drive systems – Part 5-1: Safety requirements –Electrical,thermal and energy. (IEC 61800-5-1:2016) **EN 60034-1:2010/AC:2010** Rotating electrical machines - Part 1: Rating and performance
EMC Directive 2014/30/EU	**EN 61800-3:2004/A1:2012** Adjustable speed electrical power drive systems – part 3: EMC requirements and specific test methods. (IEC 61800-3:2017) **EN 60034-1:2010/AC:2010** Rotating electrical machines - Part 1: Rating and performance
European Directive 2011/65/EU - "Restriction of Hazardous Substances" (RoHS) & Delegated Directive (EU) 2015/863 (RoHS 10)	**EN IEC 63000:2018** Technical documentation for the assessment of electrical and electronic products with respect to the restriction of hazardous substances. Specific offer compliance information about RoHS are publicized on *se.com*

Subject to correct installation, maintenance and use conforming to its intended purpose, to the applicable regulations and standards, to the supplier's instructions and to accepted rules of the art.
This declaration becomes invalid in the case of any modification to the products not authorized by us.

The guides giving requirements, details and advices for installation of products used are available on:
http://www.se.com

Issued at Carros - FRANCE: March 20th, 2024

DocuSigned by:
alain.bernerd
BA19724817464EF...

Name : Alain BERNERD
Industrial Control & Drives
Customer Satisfaction & Quality
Vice President

MOTION - LXM18 - EU Declaration-V4 ORIGINAL DECLARATION, NO TRANSLATION WITHOUT WRITTEN AUTHORISATION

Internal

Introduction

Overview of Lexium 18P servo drive / servo motor systems

As members of Lexium 18P servo product family, the portfolio consisting of the Lexium 18P servo drive and BCH 18 AC servo motor pursue high performance, simple interface, and easy operation, which is ideal for pulse control, script control, analog control and Modbus control.

This series consists of a wide variety of servo drives and AC servo motors from 0.05 kW ~ 3.0 kW. This servo drive range integrates real-time adaptive tuning and adaptive notch filter functions, as well as stiffness level selection and automatic switching functions that accommodate various requirements such as stability for low-stiffness machines and high speed and high selectivity for high-stiffness machines, and is combined with AC servo motors using 23 bit high-precision optical encoders. It features simple interfaces and easy operations of mechanical and positioning driving, ideal for a wide range of machines.

This manual was prepared for your proper and effective use of the Lexium 18P servo drive range featuring the above advantages.

About the Servo Drive

Nameplate

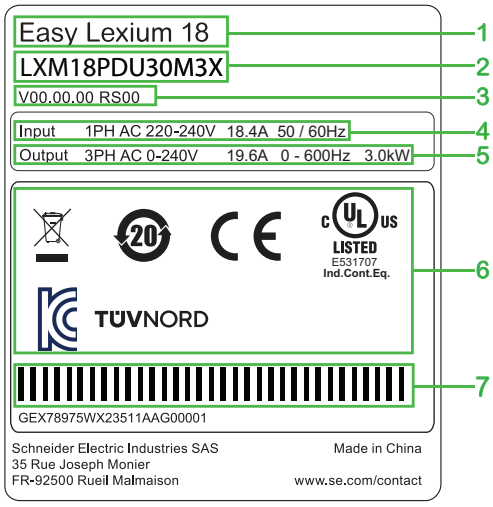

1. Product name
2. Type
3. Factory firmware version and hardware version of the device
4. Input parameters
5. Output parameters
6. Certification
7. Barcode

Description of type code

Item	1	2	3	4	5	6	7
Type code (example)	LXM	18	P	C	U04	M2	X

Item	Meaning
1	Product name LXM = Lexium AC-Servo drive
2	Product range 18= AC-Servo drive LXM18
3	Product line P = Pro line
4	Interface C = I / O interface with PTI only D = I / O interface with PTI, Analog and MODBUS RTU
5	Continuous power output U: x 0.1 kW e.g.: U04 = 0.4 kW
6	Input power stage supply [Vac] M2 = Single phase, 220 Vac M3 = Three phases, 220 Vac
7	Special function X=No built-in EMC filter

Designation of each part of the servo drive

Dimension 1: servo drive (0.1- 0.4 kW)

Front panel:

1. Connector CN3: Type C connector
2. Connector CN4: Servo drive Modbus connector
3. Connector CN1: Host computer control connector
4. Connector CN2: Encoder connector
5. Grounding terminal
6. CHARGE Drive charge indicator
7. Connector CNP: Motor connector
8. Connector CNP: External brake resistor and power connector
9. QR code, which can be scanned for detailed technical data, installation and wiring guides
10. HMI

NOTE: Dimension1: There is no cooling fan for size 1 servo drive

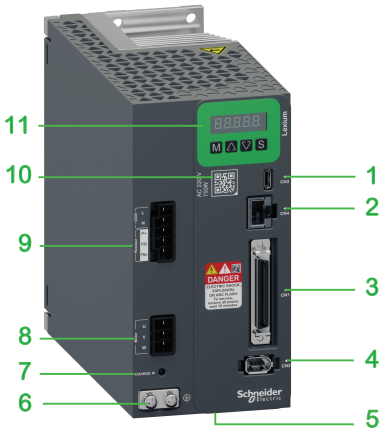

Dimension 2: servo drive (0.75- 1.5 kW)

Front panel:

1. Connector CN3: Type C connector
2. Connector CN4: Servo drive Modbus connector
3. Connector CN1: Connected to the host computer controller
4. Connector CN2: Encoder connector
5. Replaceable cooling fan
6. Grounding terminal
7. CHARGE Drive charge indicator
8. Connector CN3: Motor connector
9. Connector CN3: External brake resistor and power connector
10. QR code, which can be scanned for detailed technical data, installation and wiring guides
11. HMI

NOTE: There is no cooling fan for 0.75 kW servo drive

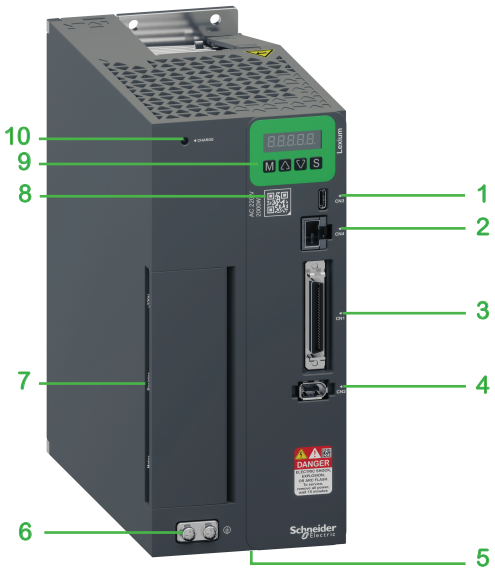

Dimension 3: servo drive (2.0- 3.0 kW)

Front panel:

1. Connector CN3: Type C connector
2. Connector CN4: Servo drive Modbus connector
3. Connector CN1: Connected to the host computer controller
4. Connector CN2: Encoder connector
5. Replaceable cooling fan
6. Grounding terminal
7. Motor connector, external brake resistor, and power connector
8. QR code, which can be scanned for detailed technical data, installation and wiring guides
9. HMI
10. CHARGE Drive charge indicator

About the Servo Motor

Nameplate

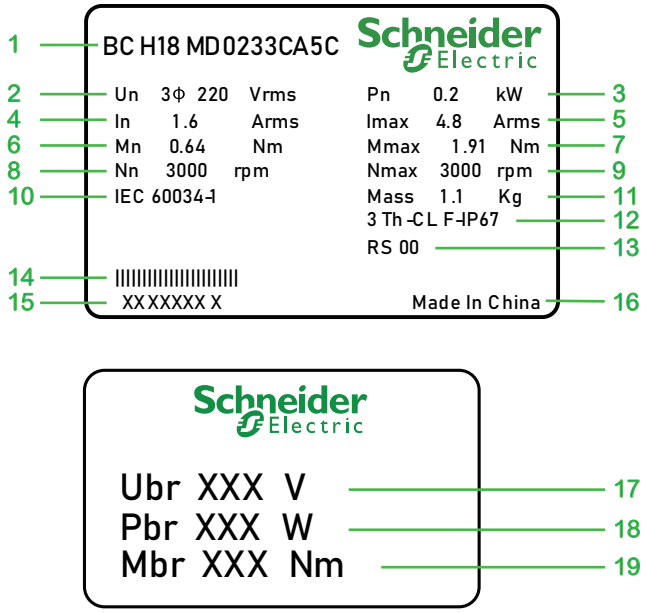

Nameplate:

1. Motor model
2. Nominal voltage
3. Nominal power
4. Nominal current
5. Maximum current
6. Nominal torque
7. Max. torque
8. Nominal speed of rotation
9. Maximum speed of rotation allowed
10. Applicable standards
11. Quality
12. Number of motor phases, temperature rating, degree of protection
13. Hardware version
14. Barcode
15. Serial number
16. Country of origin
17. Holding brake voltage
18. Holding brake power
19. Holding brake torque

Description of type code

Item	1	2	3	4	5	6	7	8	9	10
Type code (example)	BCH18	L	D	04	3	3	2	A	5	C

Item	Meaning
1	Product name BCH 18=brushless servo motor, used with Lexium 18 servo drive
2	Rotational inertia L =low inertia M =middle inertia
3	Flange size B = flange 40 mm (1.58 in) D = flange 60 mm (2.36 in) F = flange 80 mm (3.15 in) H = flange 100 mm (3.94 in) M = flange 130 mm (5.12 in) R =flange 180 mm (7.09 in)
4	Nominal power A5= 0.05 kW 01 = 0.1 kW 02 = 0.2 kW 04 = 0.4 kW 07 = 0.75 kW 08 = 0.85 kW 10 = 1.0 kW 13= 1.3 kW 15 = 1.5 kW 18 = 1.8 kW 20 = 2.0 kW 24 = 2.4 kW 30 = 3.0 kW
5	Winding type and power supply 1=optimized for torque (1500 rpm); 200/240 Vac 3=optimized for speed of rotation (3000 rpm); 200/240 Vac
6	Shaft and degree of protection 3=with parallel keys; shaft and housing IP 67
7	Encoder 2 = 23-bit optic incremental encoder C = 23-bit optic multi-turn absolute encoder
8	Holding brake A=without holding brake F =with holding brake
9	Connection 5=Micro plug 6=Military plug
10	Mechanical interface - mounting C=motor compatible with Asian style mountain standards

Designation of each part of servo motor

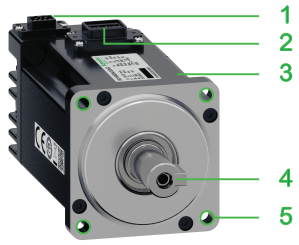

Size 1: flange servo motor 40/60/80 mm (1.57/2.36/3.15 in)

Servo motor interface:

1. Encoder interface, equipped with plastic connector
2. Power interface, equipped with plastic connector (1)
3. Casing, RAL 9005 opaque black
4. A keyed shaft end with oil seal
5. 4-point axial mounting screw hole (2)

(1): Holding brake interface is combined with the power interface

(2): 2-point axial mounting screw holes or flange motor 40 mm (1.57 in)

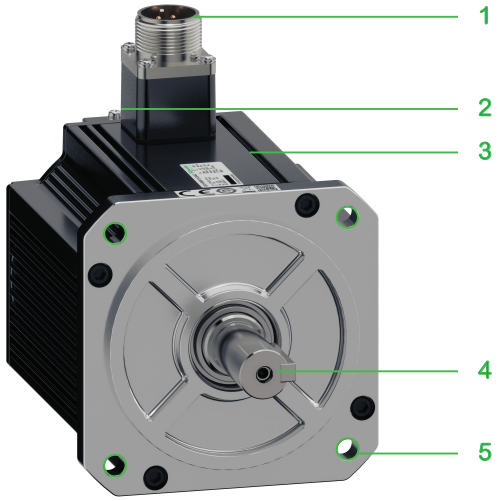

Size 2: flange servo motor 100/130/180 mm (3.94/5.12/7.09 in)

Servo motor interface:

1. Power interface, equipped with Military connector
2. Encoder interface, equipped with Military connector
3. Casing, RAL 9005 opaque black
4. A keyed shaft end with oil seal
5. 4-point axial mounting screw holes

Confirmation of a servo drive and its related servo motor

Inertia and plug type	Drive type	Motor model	Nominal power	Nominal speed of rotation	Nominal torque	Rotational inertia
			kW	rpm	Nm	kgcm²
Micro plug for low inertia motor	LXM18P*U01M2X	BCH18LBA533*(1)A5C	0.05	3000	0.16	0.02
		BCH18LBA533*(1)F5C	0.05	3000	0.16	0.027
	LXM18P*U01M2X	BCH18LB0133*(1)A5C	0.1	3000	0.32	0.030
		BCH18LB0133*(1)F5C	0.1	3000	0.32	0.036
	LXM18P*U02M2X	BCH18LD0233*(1)A5C	0.2	3000	0.64	0.15
		BCH18LD0233*(1)F5C	0.2	3000	0.64	0.21
	LXM18P*U04M2X	BCH18LD0433*(1)A5C	0.4	3000	1.27	0.25
		BCH18LD0433*(1)F5C	0.4	3000	1.27	0.31
	LXM18P*U07M2X	BCH18LF0733*(1)A5C	0.75	3000	2.39	0.78
		BCH18LF0733*(1)F5C	0.75	3000	2.39	0.93
	LXM18P*U10M2X	BCH18LF1033*(1)A5C	1.0	3000	3.18	0.994
		BCH18LF1033*(1)F5C	1.0	3000	3.18	1.12
Micro plug for middle inertia motor	LXM18P*U01M2X	BCH18MBA533*(1)A5C	0.05	3000	0.16	0.04
		BCH18MBA533*(1)F5C	0.05	3000	0.16	0.046
	LXM18P*U01M2X	BCH18MB0133*(1)A5C	0.1	3000	0.32	0.07
		BCH18MB0133*(1)F5C	0.1	3000	0.32	0.076
	LXM18P*U01M2X	BCH18MD0133*(1)A5C	0.1	3000	0.32	0.16
		BCH18MD0133*(1)F5C	0.1	3000	0.32	0.22
	LXM18P*U02M2X	BCH18MD0233*(1)A5C	0.2	3000	0.64	0.268
		BCH18MD0233*(1)F5C	0.2	3000	0.64	0.328
	LXM18P*U04M2X	BCH18MD0433*(1)A5C	0.4	3000	1.27	0.478
		BCH18MD0433*(1)F5C	0.4	3000	1.27	0.54
	LXM18P*U02M2X	BCH18MF0233*(1)A5C	0.2	3000	0.64	0.55
		BCH18MF0233*(1)F5C	0.2	3000	0.64	0.68
	LXM18P*U04M2X	BCH18MF0433*(1)A5C	0.4	3000	1.27	1.19
		BCH18MF0433*(1)F5C	0.4	3000	1.27	1.33
	LXM18P*U07M2X	BCH18MF0733*(1)A5C	0.75	3000	2.39	1.79
		BCH18MF0733*(1)F5C	0.75	3000	2.39	1.90
	LXM18P*U10M2X	BCH18MF1033*(1)A5C	1.0	3000	3.18	2.16
		BCH18MF1033*(1)F5C	1.0	3000	3.18	2.32
	LXM18P*U30M3X	BCH18MR3013*(1)A6C	3.0	1500	19.1	46.32
		BCH18MR3013*(1)F6C	3.0	1500	19.1	51.1

Inertia and plug type (Continued)	Drive type	Motor model	Nominal power	Nominal speed of rotation	Nominal torque	Rotation-al inertia
			kW	rpm	Nm	kgcm²
Military plug for low inertia motor	LXM18P*U10M2X	BCH18LH1033*(1)A6C	1.0	3000	3.18	1.43
		BCH18LH1033*(1)F6C	1.0	3000	3.18	1.53
	LXM18P*U15M2X	BCH18LH1533*(1)A6C	1.5	3000	4.77	2.09
		BCH18LH1533*(1)F6C	1.5	3000	4.77	2.21
	LXM18P*U20M3X	BCH18LH2033*(1)A6C	2.0	3000	6.37	2.64
		BCH18LH2033*(1)F6C	2.0	3000	6.37	2.74
	LXM18P*U30M3X	BCH18LM3033*(1)A6C	3.0	3000	9.8	7.63
		BCH18LM3033*(1)F6C	3.0	3000	9.8	8.3
Military plug for low inertia, low speed, high torque motor	LXM18P*U10M2X	BCH18MM0813*(1)A6C	0.85	1500	5.39	14
		BCH18MM0813*(1)F6C	0.85	1500	5.39	14.7
	LXM18P*U10M2X	BCH18MM1023*(1)A6C	1.0	2000	4.77	14
		BCH18MM1023*(1)F6C	1.0	2000	4.77	14.7
	LXM18P*U15M2X	BCH18MM1313*(1)A6C	1.3	1500	8.34	20.88
		BCH18MM1313*(1)F6C	1.3	1500	8.34	21.54
	LXM18P*U15M2X	BCH18MM1523*(1)A6C	1.5	2000	7.16	20.88
		BCH18MM1523*(1)F6C	1.5	2000	7.16	21.54
	LXM18P*U20M3X	BCH18MM1813*(1)A6C	1.8	1500	11.5	27.79
		BCH18MM1813*(1)F6C	1.8	1500	11.5	28.45
	LXM18P*U20M3X	BCH18MM2023*(1)A6C	2.0	2000	9.55	27.79
		BCH18MM2023*(1)F6C	2.0	2000	9.55	28.45
	LXM18P*U30M3X	BCH18MR2413*(1)A6C	2.4	1500	15.1	46.32
		BCH18MR2413*(1)F6C	2.4	1500	15.1	51.1

(1):

- C=23-bit optic multi-turn absolute encoder
- 2=23-bit optic incremental encoder

The calculation for the voltage dip tolerance standard

- When the voltage drops to 50% of its nominal value, the equipment must remain stable within 0.05 to 0.2 seconds.
- When the voltage drops to 70% of its nominal value, the equipment must remain stable within 0.2 to 0.5 seconds.
- When the voltage drops to 80% of its nominal value, the equipment must remain stable within 0.5 to 1 seconds.

In accordance with the highest standards：

Transient blackout voltage	Allowed Transient blackout duration
Rated voltage x 80%	1s
Rated voltage x 70%	0.5s
Rated voltage x 50%	0.2s

The following table lists reference values for tolerance to transient blackout for reference purposes only.

Model	Rated maximum output (W)	Transient blackout maximum output (W)
LXM18*01M2X*	100W	87W
LXM18*02M2X*	200W	175W
LXM18*04M2X*	400W	200W
LXM18*07M2X*	750W	400W
LXM18*10M2X*	1000W	400W
LXM18*15M2X*	1500W	400W
LXM18*20M3X*	2000W	1800W
LXM18*30M3X*	3000W	2125W

The transient blackout voltage used in the table is rated voltage multiplied by 50%, with an transient blackout duration of 0.2 seconds.

The rated maximum output in the table refers to the rated maximum output power at the rated voltage.

The maximum output during a transient blackout in the table refers to the highest power that can be delivered during such an outage.

Selection

Selection of servo drive

Servo drive specifications

Item			Specifications
Environmental conditions	For operation	Temperature	-5°C...45°C: no derating 45°C...55°C: derating, capacity reduced by 2% for every 1°C increased; capacity reduced to 80% at 55 ° C
		Relative humidity	5%...95%, no condensing
		Altitude	≤1000 m (3280.83 ft) altitude above sea level without derating Capacity reduced by 1% per 100 m higher (328.08 ft) above 1000m-2000m; power supply overvoltage depending on overvoltage category III
		Shock	3M4. 15G, 11ms, category I area
		Vibration	3M4, 3 mm [2...9 Hz], 1G [9...200 Hz], category I area
		Temperature detection	Motor overtemperature sensing is required
		Installation	Install device in pollution degree 2 environment
	For storage	Temperature	-25°C...70°C
		Relative humidity	5%...95%, no condensing
		Vibration	2M2, 3.5 mm [2...9 Hz]/1G [9...200 Hz]/1.5G [200...500 Hz]
	Degree of protection		IP20 (exposed screw IP00)
	Environmental class		Class 2: No corrosive gas or combustible gas No oil, water, or chemical splashes Environment with little dust, dirt, salt, and metal powder
Input power	Voltage	Size 1 device	Single-phase 220 Vac, 200 Vac -15% to 240 Vac + 10%
		Size 2 device	
		Size 3 device	Three-phase 220 Vac, 200 Vac -15% to 240 Vac + 10%
	Frequency		50 Hz 5% to 60 Hz 5%
	Earthing type	TT earthing system	Approved
		TN earthing system	Approved
		IT earthing system	Not approved
	Leakage current		<5 mA
Methods of heat dissipation			0.1 kW to 0.75 kW: free cooling 1.0 kW to 3.0 kW: fan cooling
Feedback interface			23 bit high precision optical encoder

Item			Specifications
Control interface	Digital	Input	8 universal digital inputs, with bidirectional polarity 2 high-speed digital inputs, with bidirectional polarity Input functions can be parameterized, the sampling time of DI is 250 μs
		Output	6 universal digital output Output functions can be parameterized
	Pulse	Input	2 open collector input channels (The input voltage is 24 V.) 2 differential high-speed pulse input channels
		Output	3 differential high-speed pulse output channels 1 motor zero pulse open collector output channel
	Analog	Input	2 input: - 1 * 16 bit ADC input - 1 * 12 bit ADC input Input accuracy 0.1%
		Output	2 output: - 1 * 12 bit DAC output - 1 * 12 bit DAC output Output accuracy 0.2%
Commissioning interface	USB		Type-C USB Commissioning and monitoring via host computer software
	HMI		5-bit 7-segment digital tube 4 buttons
Methods of braking	Regenerative braking		Built-in regenerative braking resistor
	Dynamic braking		Built-in dynamic braking function, which can be turned on via parameters

Item			Specifications
Position control	Control input		1. Error clearing 2. Pulse suppression 3. Electronic gear ratio switching 4. Operating mode switching 5. Torque limit 6. RMAC
	Control output		1. Target position reached 2. Position error within range 3. Velocity threshold comparison 4. Torque threshold comparison 5. Motor in zero velocity & movement
	Pulse	Input pulse type	P + D
			CW+ CCW
			AqB (with 4x frequency)
		Maximum pulse frequency	Open collector input channels: 24 Vdc open collector pulses up to 200 kHz 5 Vdc open collector pulses up to 500 kHz
			Differential high-speed pulse input channels: -RS4223.3 Vdc high-speed pulse up to 16 MHz
		Internal counting	131072 pulses/revolution
		Electronic gear setting	Select the electronic gear ratio directly via parameters
			Electronic gear ratio calculation by numerator/denominator
			Switchable electronic gear ratio
		Analog position feedback output	Differential high-speed pulse outputs: -RS422 3.3 Vdc high-speed pulses up to 16 MHz (with 4x frequency) -Resolution set via parameters
			Motor zero pulse open collector output channel
		Smoothing function	Selectable low-pass filter or smoothed shock filter
	Analog	Torque limit input	Torque limit via analog voltage Setting of the ratio of input voltage to torque limit via parameters

Item			Specifications
Velocity control	Control input		1. Selection of internal velocity 2. Zero clamp 3. Operating mode switching 4. Analog command symbol switching 5. Torque limit 6. Velocity limit
	Control output		1. Target velocity reached 2. Velocity error within range 3. Velocity threshold comparison 4. Torque threshold comparison 5. Motor in zero velocity & movement
	Analog	Velocity command input	Velocity command input via analog voltage Setting of the ratio of input voltage to velocity command via parameters
		Velocity limit input	Velocity limit via analog voltage Setting of the ratio of input voltage to torque limit via parameters
		Torque limit input	Torque limit via analog voltage Setting of the ratio of input voltage to torque limit via parameters
		Smoothing function	Select analog input low-pass filter or mobile smoothing filter
	Internal command	Command input	Select internal velocity via digital input, or remain zero velocity
		Smoothing function	Set ramp up and ramp down individually, support S-curve smoothing
Torque control	Control input		1. Internal torque selection 2. Zero clamp 3. Operating mode switching 4. Analog command symbol switching 5. Torque limit 6. Velocity limit
	Control output		1. Target velocity reached 2. Velocity error within range 3. Velocity threshold comparison 4. Torque threshold comparison 5. Motor in zero velocity & movement
	Analog	Torque command input	Torque command input via analog voltage Setting of the ratio of input voltage to torque limit via parameters
		Velocity limit input	Velocity limit via analog voltage Setting of the ratio of input voltage to velocity limit via parameters
		Torque limit input	Torque limit via analog voltage Setting of the ratio of input voltage to torque limit via parameters
		Smoothing function	Select analog input low-pass filter or mobile smoothing filter
	Internal command	Command input	Select internal torque selection via digital input, or hold zero torque
		Smoothing function	Individual torque ramps can be set
Internal task	Script mode		Write internal motion tasks as defined by script rules
	Motion sequence mode		Set and execute the motion defined in the internal motion task group

Item			Specifications
Control loop tuning	Self-tuning	Easy Tuning	The drive drives the motor according to internal preset actions and measures the gain parameters.
		Comfort Tuning	Motor trajectory parameters can be set, and the drive drives the motor according to the custom trajectory and measures the gain parameters
		Dynamic self-adapting	The drive automatically tests load inertia ratios in real time and sets the corresponding gain parameters according to the selected stiffness level
		Automatic notch filter	The drive automatically detects the resonant frequency of the load and automatically sets one or two sets of built-in notch filters
	Manual tuning		Serial control loop
			End vibration suppression filter
			Manual/automatic notch filter
Others			Integral solid state short circuit protection does not provide branch circuit protection. Branch circuit protection must be provided in accordance with the National Electrical Code and any additional local codes” or the equivalent

Internal block diagram of the servo drive

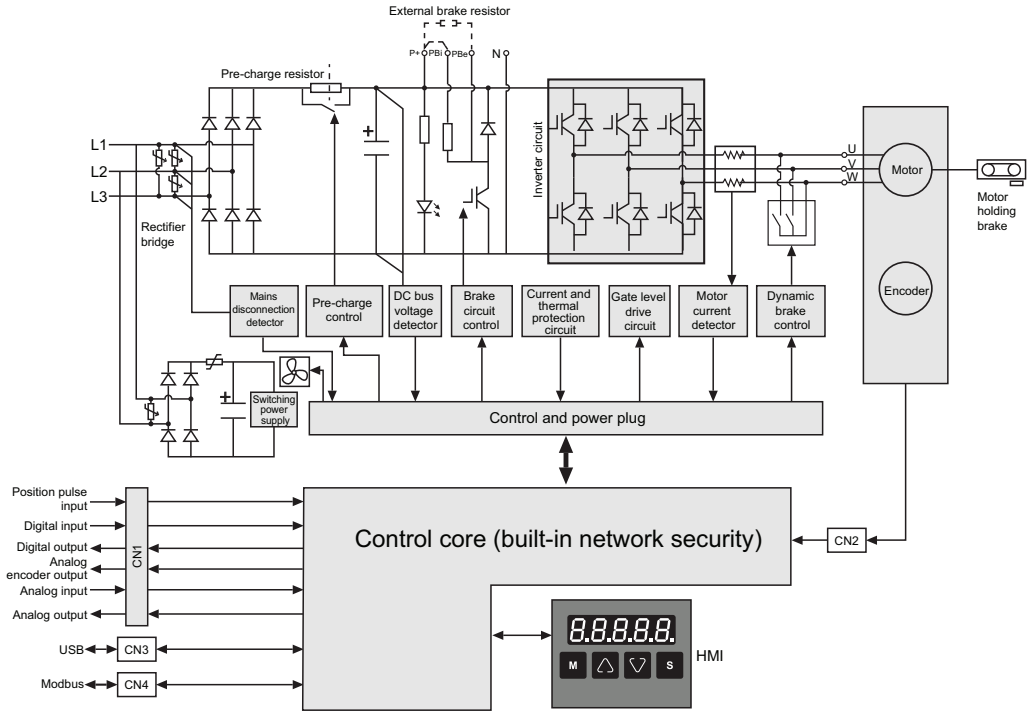

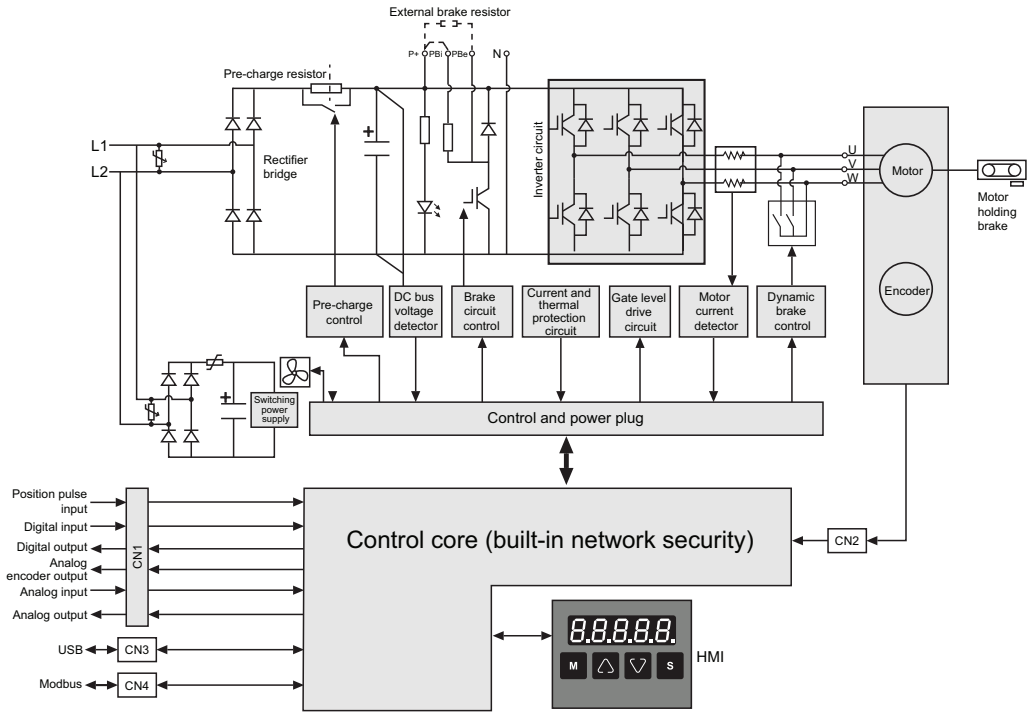

The control core features built-in firmware signature and secure boot functions, effectively ensuring the security and robustness of the device and reaching security level 1.

Servo Drive Ratings

Reference LXM18P*M2X Model LXM18P*M2X	U01	U02	U04	U07	U10	U15
Input voltage / phase [Vac]	Single-phase 200...240Vac, - 15%...+ 10%					
Frequency	50 Hz - 5%...60 Hz + 5%					
Continuous input current [Arms]	1.4	2.7	4.9	8.5	11	15.8
Rated output [kW]	0.1	0.2	0.4	0.75	1.0	1.5
Nominal output current [Arms]	1.2	1.8	2.8	5.1	7.6	9.5
Peak output current [Arms]	3.9	5.9	9.6	17.3	22.8	29.2

Reference LXM18P*M3X Model LXM18P*M2X	U20	U30
Nominal input voltage [Vac]	Three-phase 200...240Vac, - 15%...+ 10%	
Frequency	50 Hz - 5%...60 Hz + 5%	
Continuous input current [Arms]	13.2	18.4
Rated output [kW]	2.0	3.0
Nominal output current [Arms]	18.5	19.6
Peak output current [Arms]	42	56

Servo Drive Dimensions

Size1: 0.1kW … 0.4kW (U01/ U02/ U04)

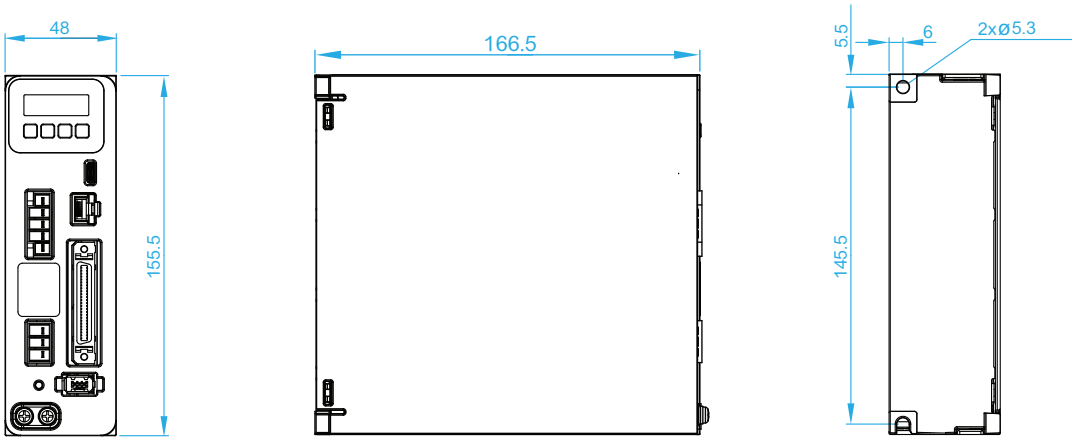

Size2: 0.75kW … 1.5kW (U07/ U10/ U15)

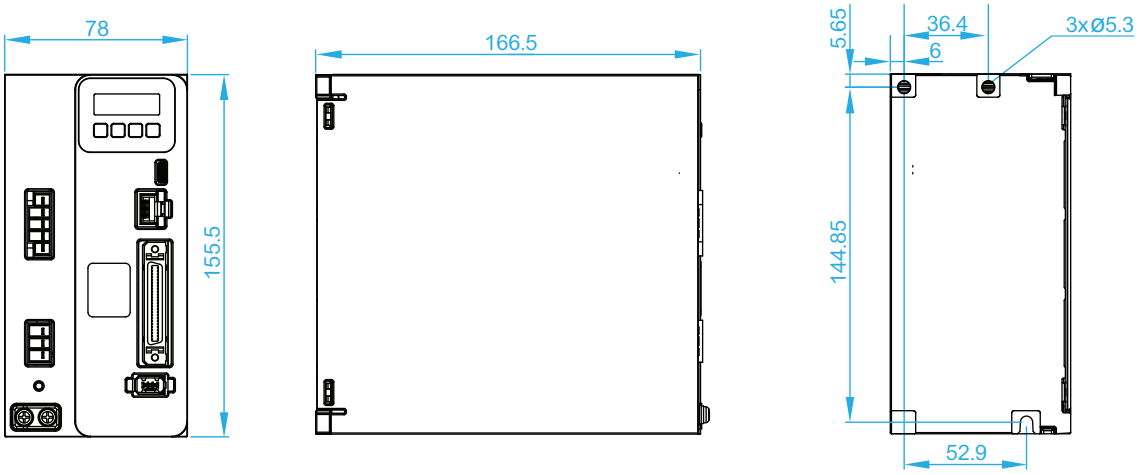

Size3: 2.0kW … 3.0kW (U20/ U30)

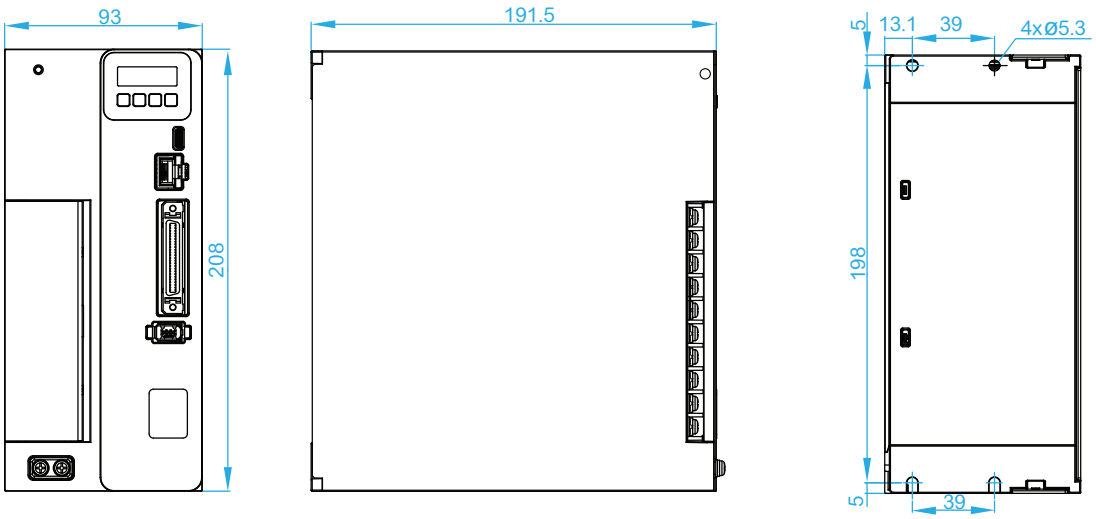

Servo Motor Selections

Servo Motor Specifications

Item			Specifications
Environmental conditions	for use	Temperature	-5℃...40℃: non-condensing, no icing 40℃...55℃: derating
		Relative humidity	5%- 80%, non-condensing
		Altitude	<=1000 m (3280.83 ft) above sea level without degrating 1000~ 2000 m(3280.83 ft~ 6561.66 ft) above sea level with degrating
		Shock	150 m/s^2
		Vibration	0.15 mm (10 Hz..60 Hz), 20 m/s^2 (10 Hz..60 Hz)
	For storage	Temperature	-20℃...60℃
		Relative humidity	<=75%, non-condensing
Installation	Installation direction		IM B5, IM V1, IM V3
	Degree of protection	Shaft end	IP67 (equipped with oil seal)
		Casing	IP67 (when connected with cable connector)
	Connection		Flange connection
Excitation			Permanent magnet synchronous
Insulation class			F (155℃)
Certification			CE, UL, China Energy Label Grade 2 (≥550W)

Servo Motor Ratings

Type of inertia	Reference: BCH18		LBA5	LB01	LD02	LD04	LF07	LF10	LH10	LH15	LH20	LM30
Low inertia motor	Voltage class [Vac]		200...240 Vac									
	Nominal output [kW]		0.05	0.1	0.2	0.4	0.75	1.0	1.0	1.5	2.0	3.0
	Nominal torque [Nm]		0.16	0.32	0.64	1.27	2.39	3.18	3.18	4.77	6.37	9.8
	Max. torque [Nm]		0.48	0.96	1.92	3.81	7.17	9.54	9.54	14.3	19.1	29.4
	Nominal current [Arms]		1.1	1.1	1.6	2.8	5.1	6.8	7.3	9.2	13.2	18.6
	Maximum current [Arms]		3.4	3.4	5.1	8.5	15.6	21.5	22	28.8	41	56
	Nominal speed of rotation [rpm]		3000	3000	3000	3000	3000	3000	3000	3000	3000	3000
	Maximum speed of motor [rpm]		6000	6000	6000	6000	6000	6000	6000	6000	6000	6000
	Torque constant [Nm/Arms]		0.15	0.29	0.40	0.45	0.47	0.47	0.44	0.52	0.48	0.53
	Back electromotive force constant [V/krpm]		11.9	23.6	27.1	32.2	32.2	31	30	34.2	32.8	35
	Rotational inertia [kgcm²]	Without holding brake	0.02	0.029-6	0.15	0.25	0.78	0.994	1.43	2.09	2.64	7.63
		With holding brake	0.027	0.036	0.21	0.31	0.93	1.12	1.53	2.21	2.74	8.3
	Degree of protection		Casing with free cooling, IP67									
	Flange size mm (in)		40 (1.57)	40 (1.57)	60 (2.36)	60 (2.36)	80 (3.15)	80 (3.15)	100 (3.94)	100 (3.94)	100 (3.94)	130 (5.12)
	Specifications or holding brake	Nominal voltage [V]	24 Vdc+/-10%									
		Nominal current [A]	0.25	0.25	0.3	0.3	0.48	0.48	0.73	0.73	0.73	0.813
		Holding torque [Nm]	0.35	0.35	2.0	2.0	3.0	3.0	6.5	6.5	6.5	20
		Inertia [kgcm²]	0.006	0.006	0.059	0.059	0.123	0.123	0.0824	0.0824	0.0824	0.661
		Releasing time [ms]	20	20	20	20	20	20	20	20	20	60
		Closing time [ms]	50	50	50	50	60	60	60	60	60	120

Type of inertia	Reference: BCH18		MBA5	MB01	MD01	MD02	MD04	MF02	MF04	MF07	MF10
Middle inertia motor	Voltage class [Vac]		200...240 Vac								
	Nominal output [kW]		0.05	0.1	0.1	0.2	0.4	0.2	0.4	0.75	1.0
	Nominal torque [Nm]		0.16	0.32	0.32	0.64	1.27	0.64	1.27	2.39	3.18
	Max. torque [Nm]		0.56	1.12	0.96	2.24	4.45	1.92	4.45	8.37	11.1
	Nominal current [Arms]		1.1	1.1	1.1	1.6	2.6	1.6	2.6	4.9	6.5
	Maximum current [Arms]		3.9	3.9	3.4	5.9	9.3	5.1	9.3	17.3	22.8
	Nominal speed of rotation [rpm]		3000	3000	3000	3000	3000	3000	3000	3000	3000
	Maximum speed of motor [rpm]		6000	6000	6000	6000	6000	6000	6000	6000	6000
	Torque constant [Nm/Arms]		0.15	0.29	0.29	0.4	0.49	0.40	0.49	0.49	0.49
	Back electromotive force constant [V/krpm]		11	21	19.9	28.1	33.7	26.53	35	31	33.3
	Rotational inertia [kgcm^2]	Without holding brake	0.04	0.07	0.16	0.268	0.478	0.55	1.19	1.79	2.16
		With holding brake	0.046	0.076	0.22	0.328	0.54	0.68	1.33	1.90	2.32
	Degree of protection		Casing with free cooling, IP67								
	Flange size mm (in)		40 (1.57)	40 (1.57)	60 (2.36)	60 (2.36)	60 (2.36)	80 (3.15)	80 (3.15)	80 (3.15)	80 (3.15)
	Specifications or holding brake	Nominal voltage [V]	24 Vdc+/-10%								
		Nominal current [A]	0.25	0.25	0.3	0.3	0.3	0.48	0.48	0.48	0.48
		Holding torque [Nm]	0.35	0.35	2.0	2.0	2.0	3.0	3.0	3.0	3.0
		Inertia [kgcm^2]	0.006	0.006	0.059	0.059	0.059	0.123	0.123	0.123	0.123
		Releasing time [ms]	20	20	20	20	20	20	20	20	20
		Closing time [ms]	50	50	50	50	50	60	60	60	60

Type of inertia	Reference: BCH18		MM08	MM10	MM13	MM15	MM18	MM20	MR24	MR30
Middle inertia low speed high torque motor	Voltage class [Vac]		200...240 Vac							
	Nominal output [kW]		0.85	1.0	1.3	1.5	1.8	2.0	2.4	3.0
	Nominal torque [Nm]		5.39	4.77	8.34	7.16	11.5	9.55	15.1	19.1
	Max. torque [Nm]		16.17	14.31	25	21.48	32.2	28.65	43.5	55.39
	Nominal current [Arms]		7.3	6	9.6	8.24	14	11.7	18.6	18.9
	Maximum current [Arms]		22	18.3	29.2	25	42	36	56	54.6
	Nominal speed of rotation [rpm]		1500	2000	1500	2000	1500	2000	1500	1500
	Maximum speed of motor [rpm]		3000	3000	3000	3000	3000	3000	3000	3000
	Torque constant [Nm/Arms]		0.74	0.74	0.87	0.87	0.82	0.82	0.81	0.81
	Back electromotive force constant [V/krpm]		53.7	53.7	55.8	55.8	53.7	53.7	53.4	53.4
	Rotational inertia [kgcm^2]	Without holding brake	14	14	20.88	20.88	27.79	27.79	46.32	46.32
		With holding brake	14.7	14.7	21.54	21.54	28.45	28.45	51.1	51.1
	Degree of protection		Casing with free cooling, IP67							
	Flange size [mm/ft]		130 (5.12)	130 (5.12)	130 (5.12)	130 (5.12)	130 (5.12)	130 (5.12)	180 (7.09)	180 (7.09)
	Specifications or holding brake	Nominal voltage [V]	24 Vdc+/-10%							
		Nominal current [A]	0.813	0.813	0.813	0.813	0.813	0.813	1.14	1.14
		Holding torque [Nm]	20	20	20	20	20	20	40	40
		Inertia [kgcm^2]	0.661	0.661	0.661	0.661	0.661	0.661	4.3	4.3
		Releasing time [ms]	60	60	60	60	60	60	80	80
		Closing time [ms]	120	120	120	120	120	120	200	200

Allowable Loads of Servo Motor Output Shaft

Max. allowable shaft load

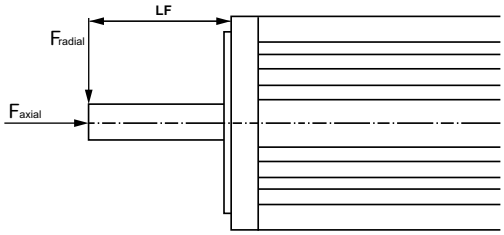

Reference: BCH18	LBA5	LB01	LD02	LD04	LF07	LF10	LH10	LH15	LH20	LM30
LF [mm]	20	20	25	25	35	35	45	45	45	63
Max. allowable radial load [N]*	78	78	245	245	392	392	686	686	686	980
Max. allowable axial load [N]*	54	54	74	74	147	147	196	196	196	392
*: Load [N]+/-10%										

Reference: BCH18	MBA5	MB01	MD01	MD02	MD04	MF02	MF04	MF07	MF10
LF [mm]	20	20	20	25	25	25	35	35	35
Max. allowable radial load [N]*	78	78	245	245	245	392	392	392	392
Max. allowable axial load [N]*	54	54	74	74	74	147	147	147	147
*: Load [N]+/-10%									

Reference: BCH18	MM08	MM10	MM13	MM15	MM18	MM20	MR24	MR30
LF [mm]	55	55	55	55	63	55	79	79
Max. allowable radial load [N]*	686	686	686	686	980	686	1470	1470
Max. allowable axial load [N]*	343	343	343	343	392	343	490	490
*: Load [N]+/-10%								

Servo Motor Dimensions/Overload Characteristics/Speed-Torque Curve

BCH18LBA5332A5C

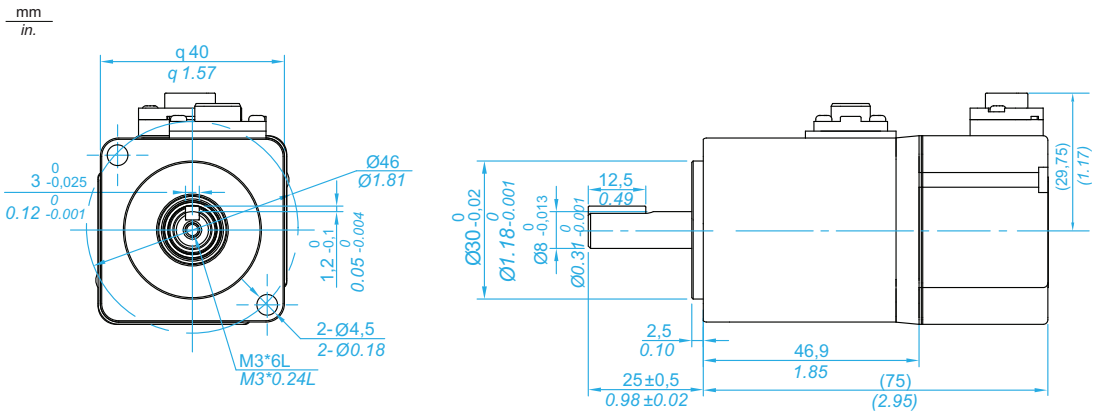

BCH18LBA5332F5C

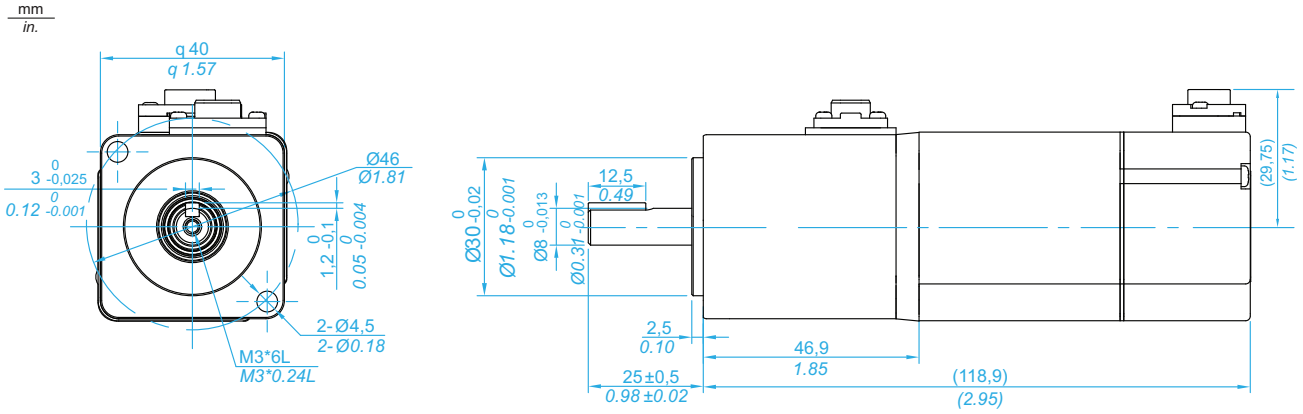

BCH18LBA5

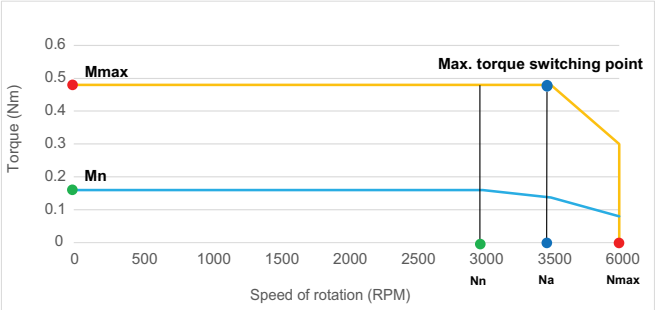

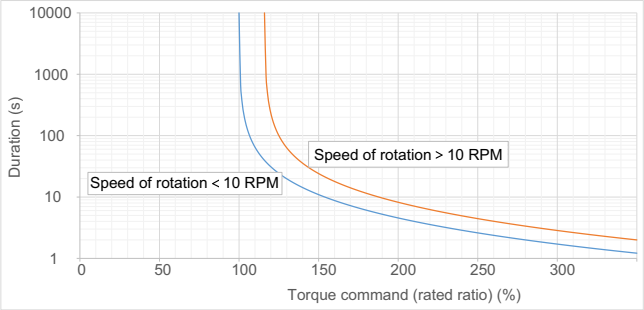

BCH18LB01332A5C

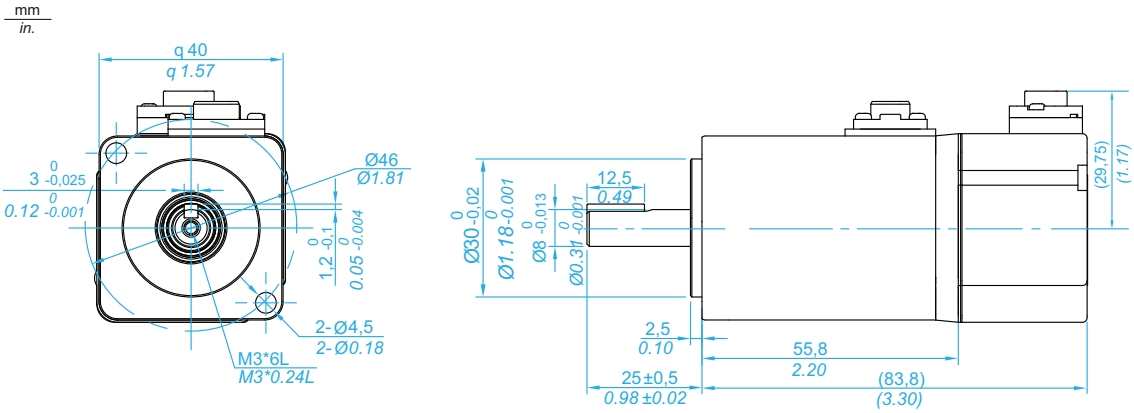

BCH18LB01332F5C

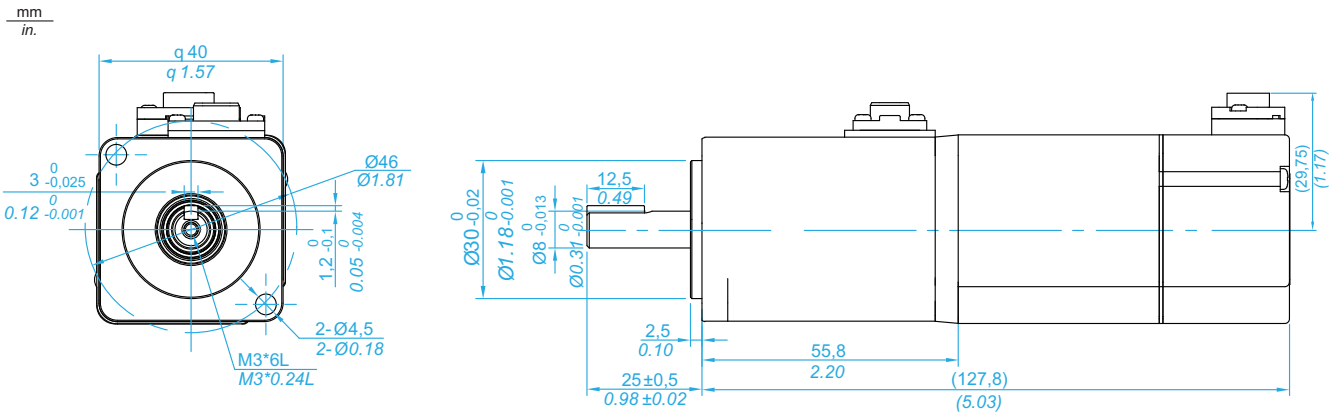

BCH18LB01

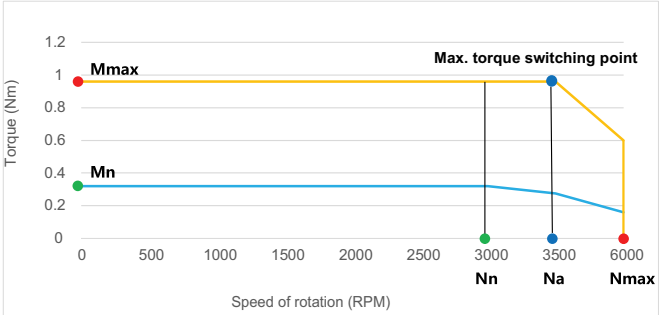

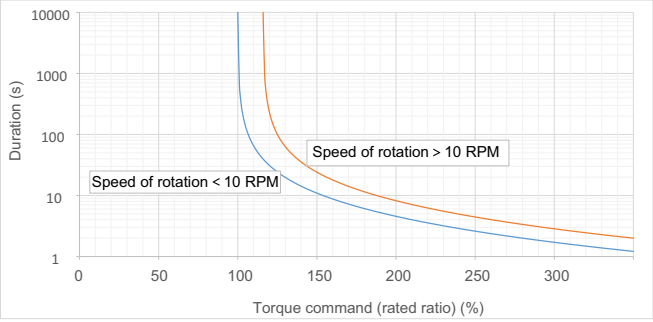

BCH18LD02332A5C

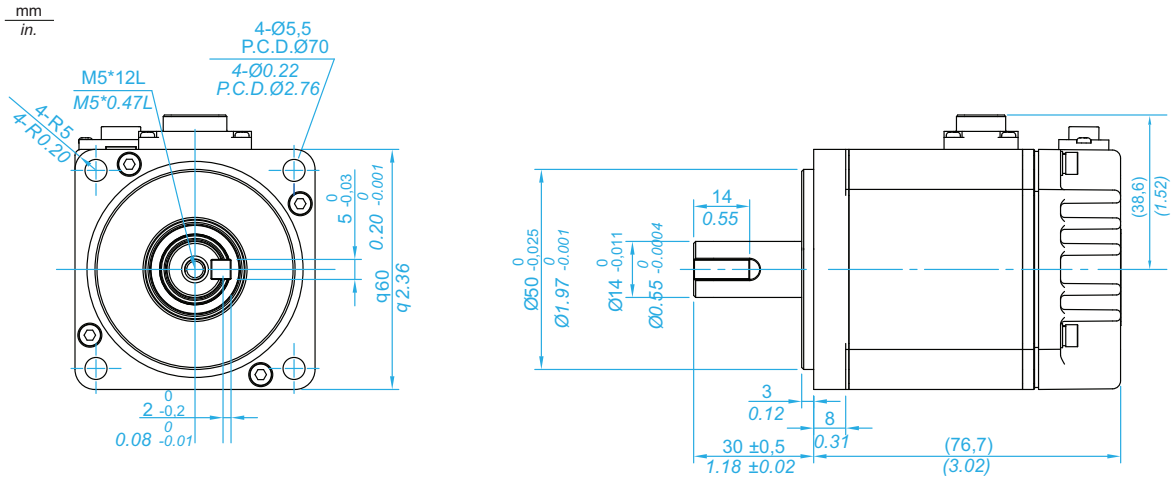

BCH18LD02332F5C

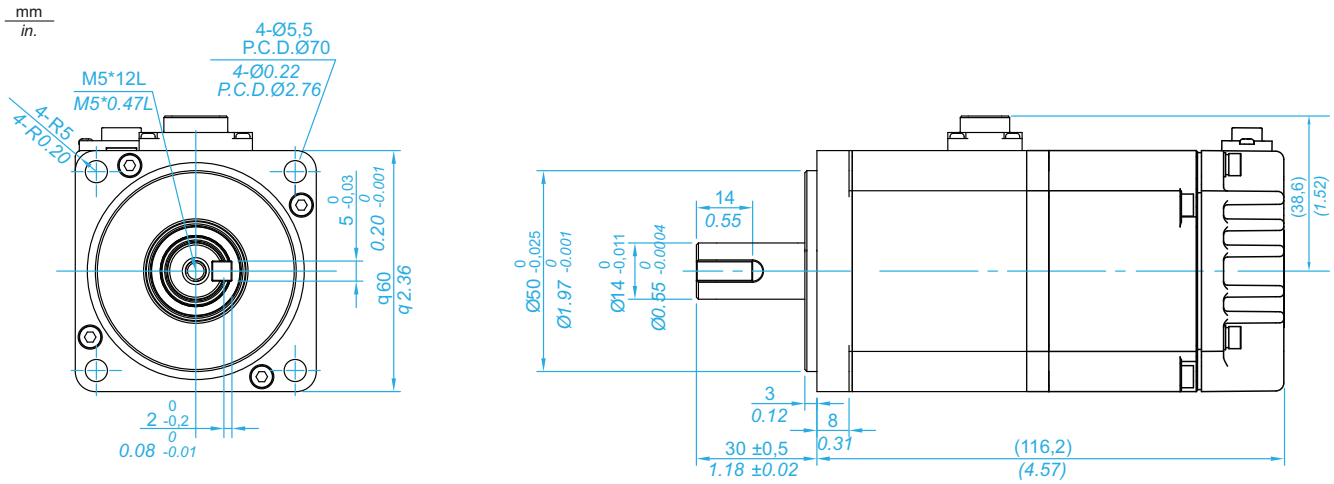

BCH18LD02

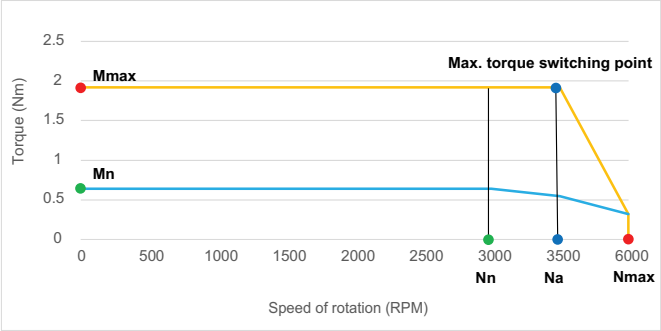

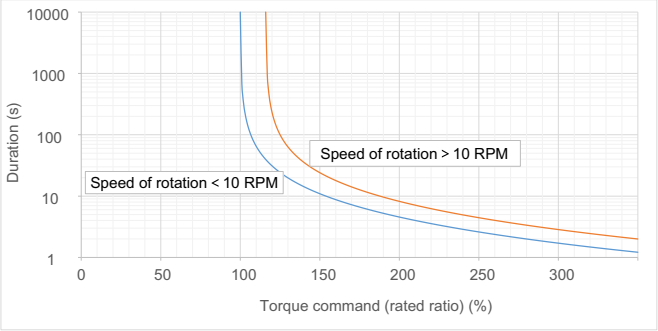

BCH18LD04332A5C

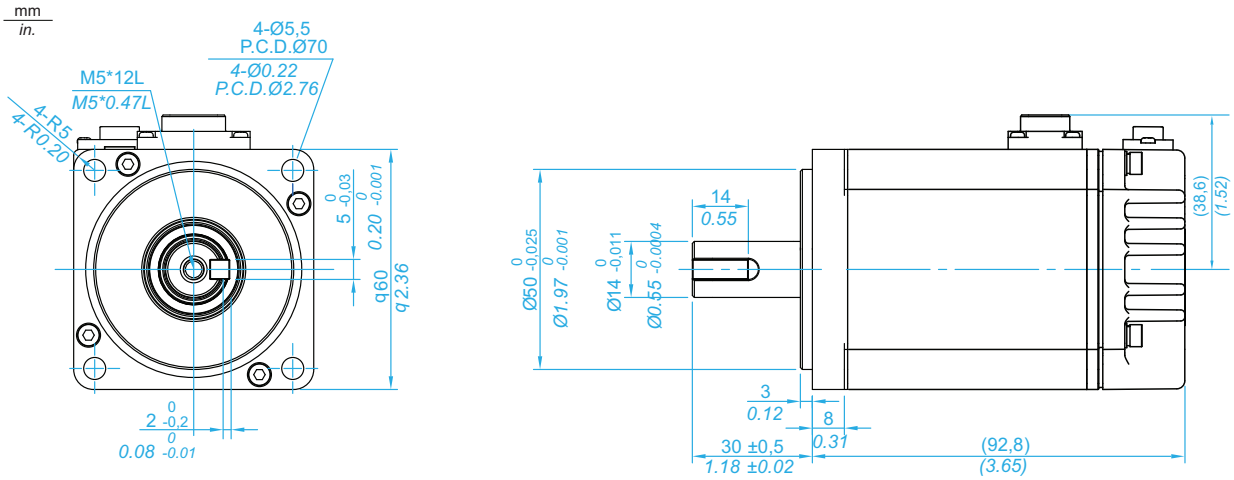

BCH18LD04332F5C

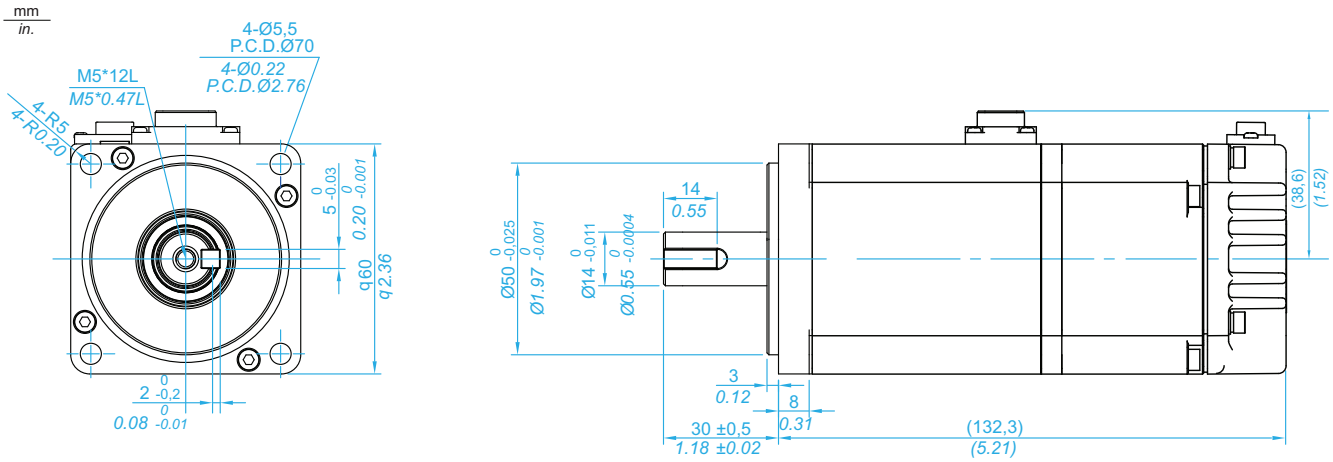

BCH18LD04

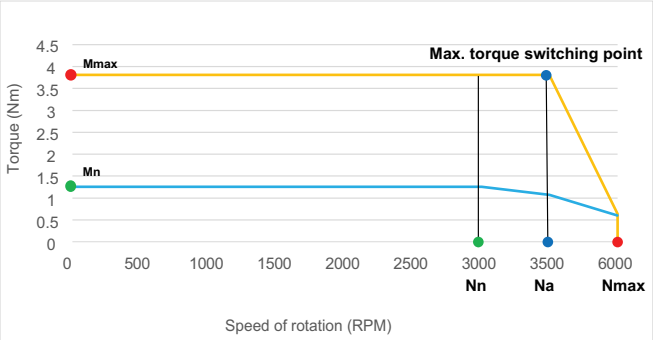

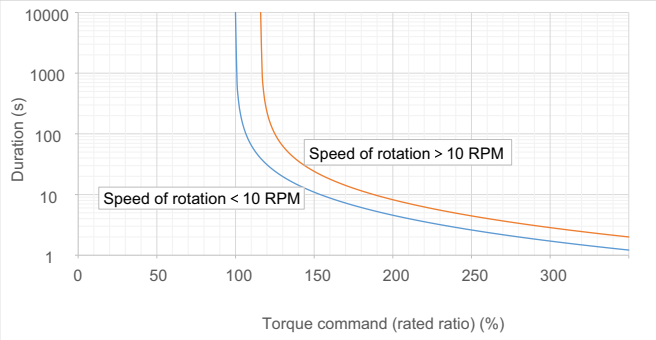

BCH18LF07332A5C

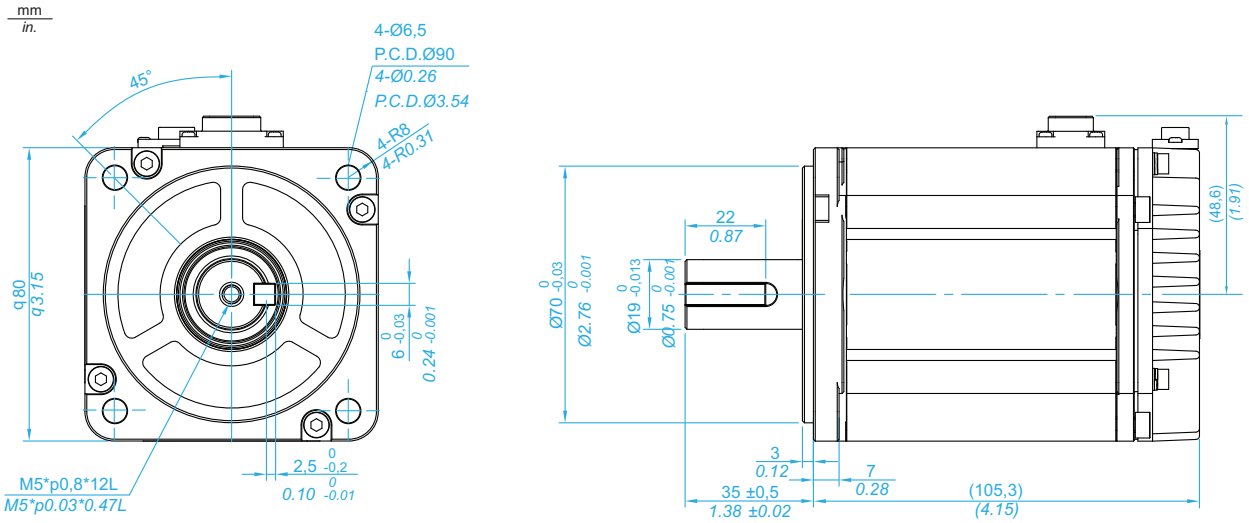

BCH18LF07332F5C

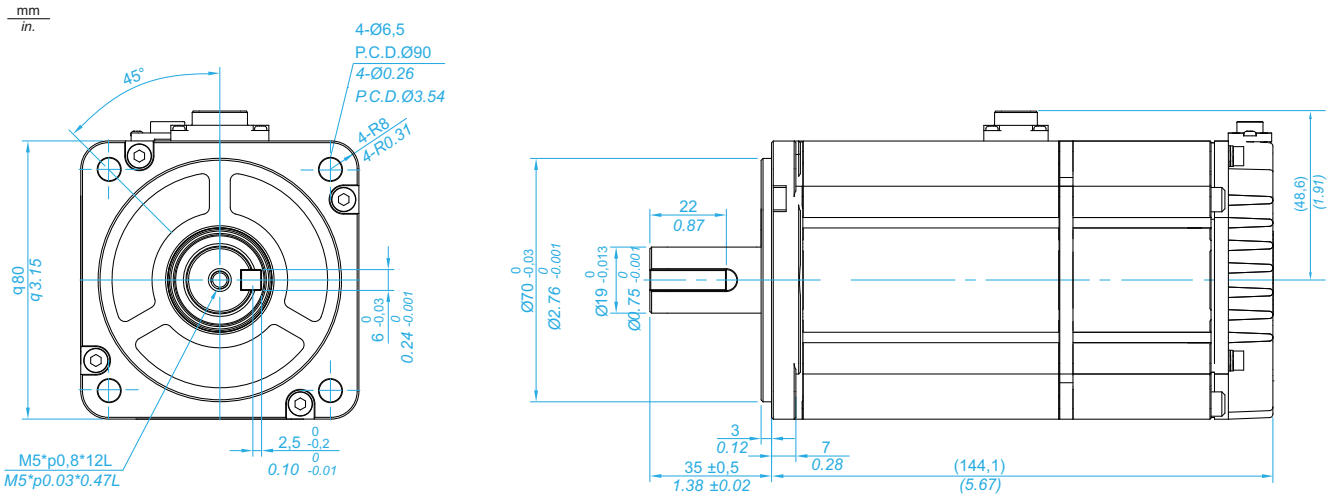

BCH18LF07

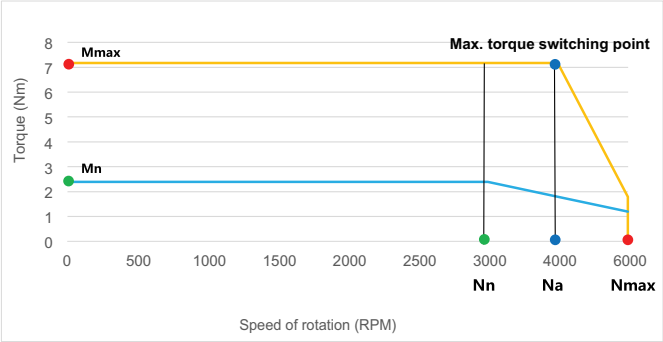

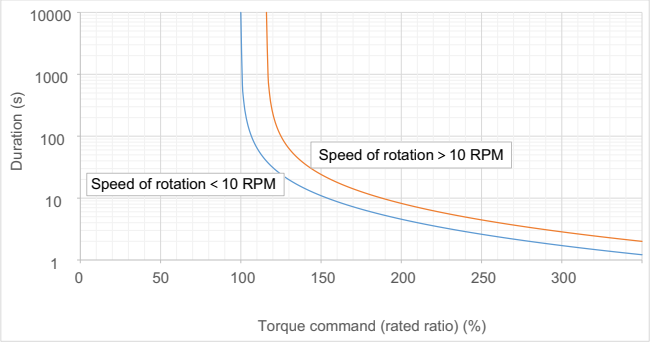

BCH18LF10332A5C

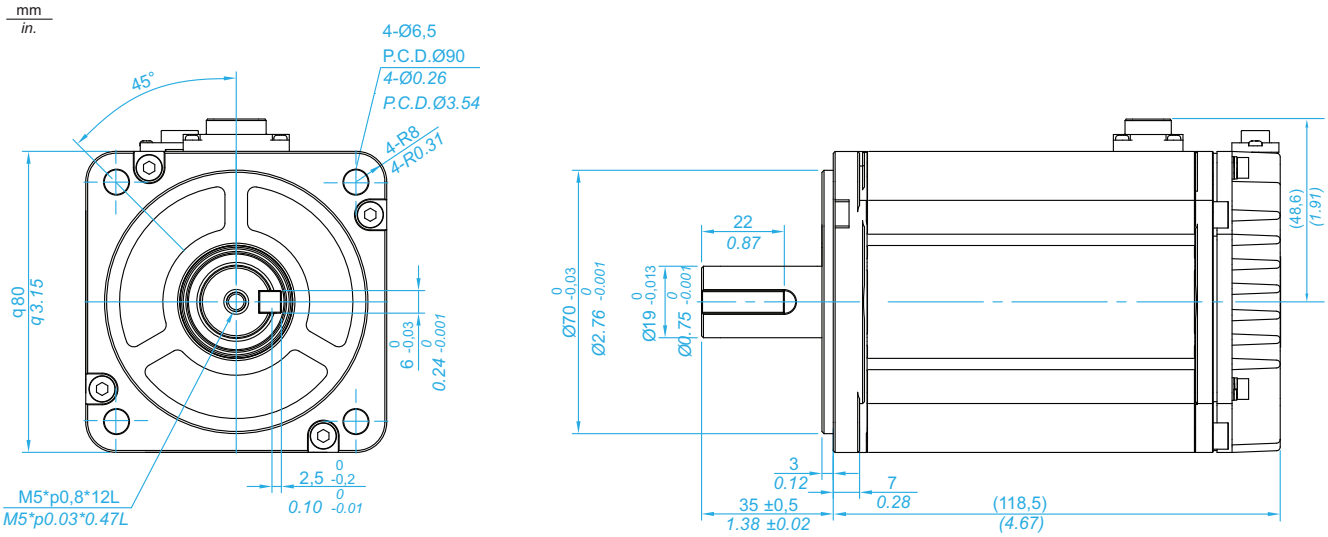

BCH18LF10332F5C

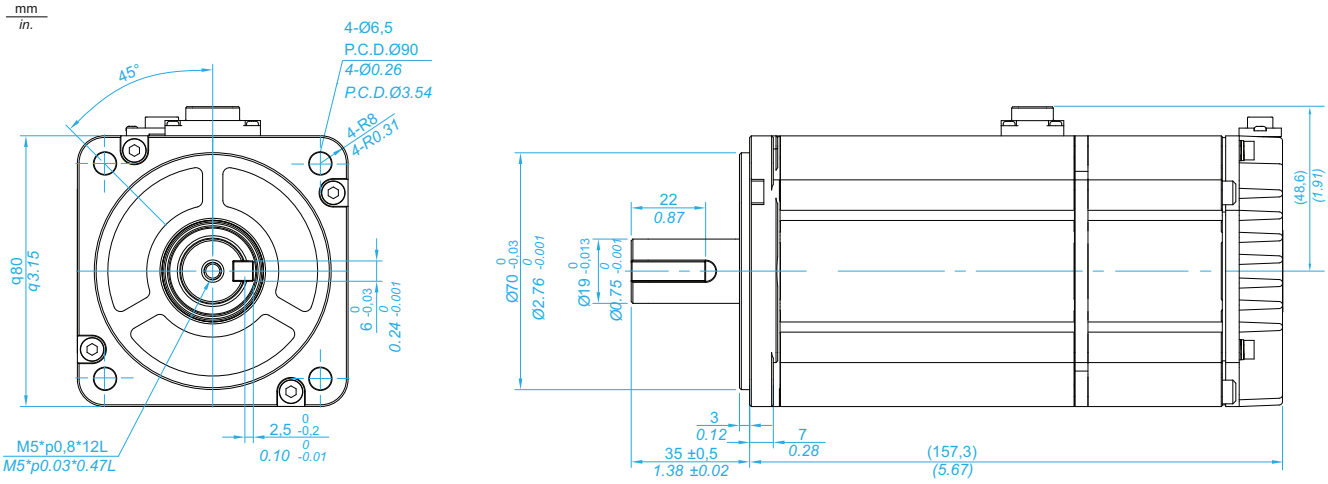

BCH18LF10

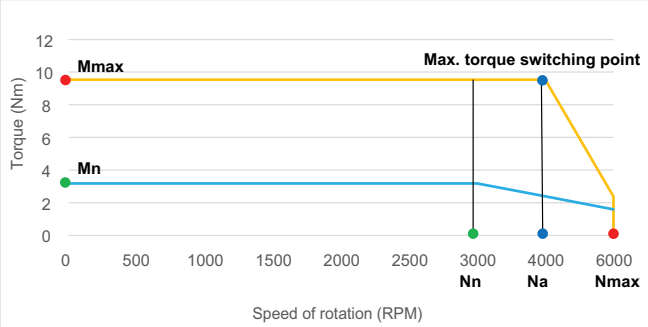

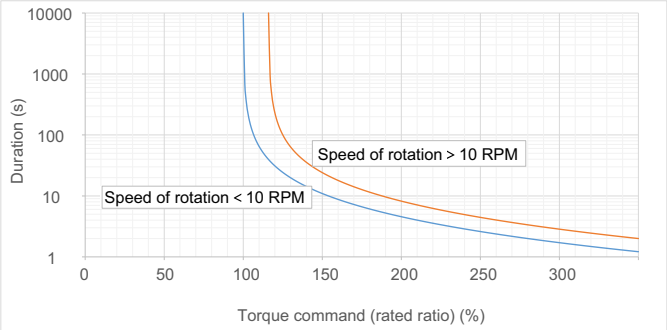

BCH18LH10332A6C

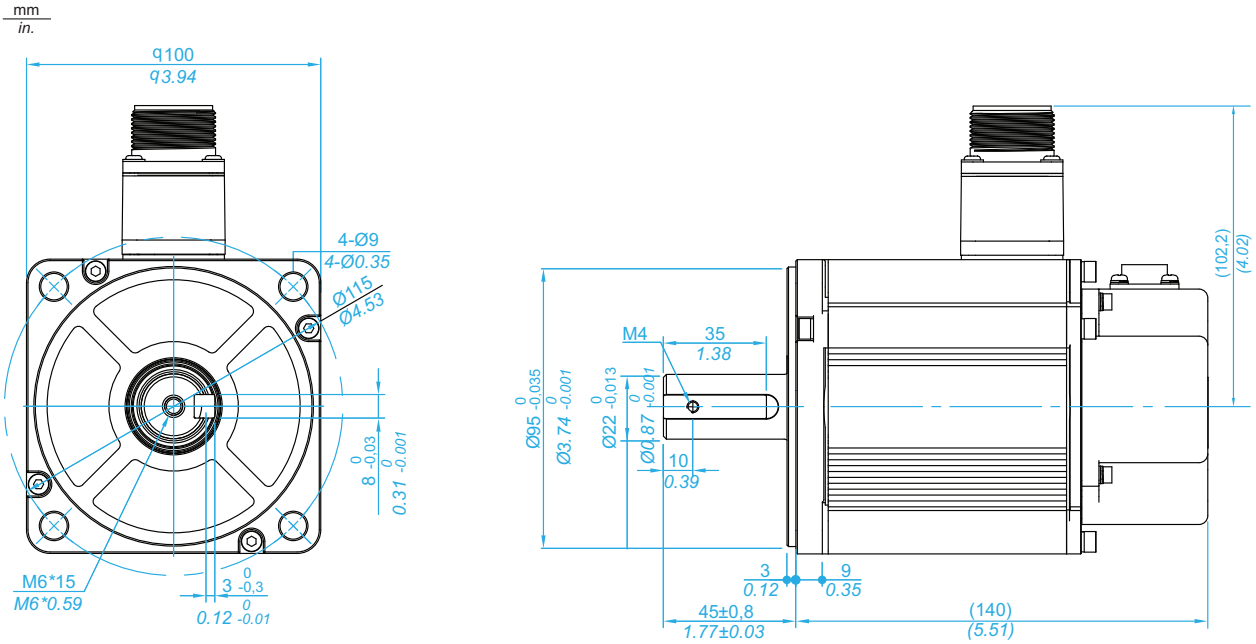

BCH18LH10332F6C

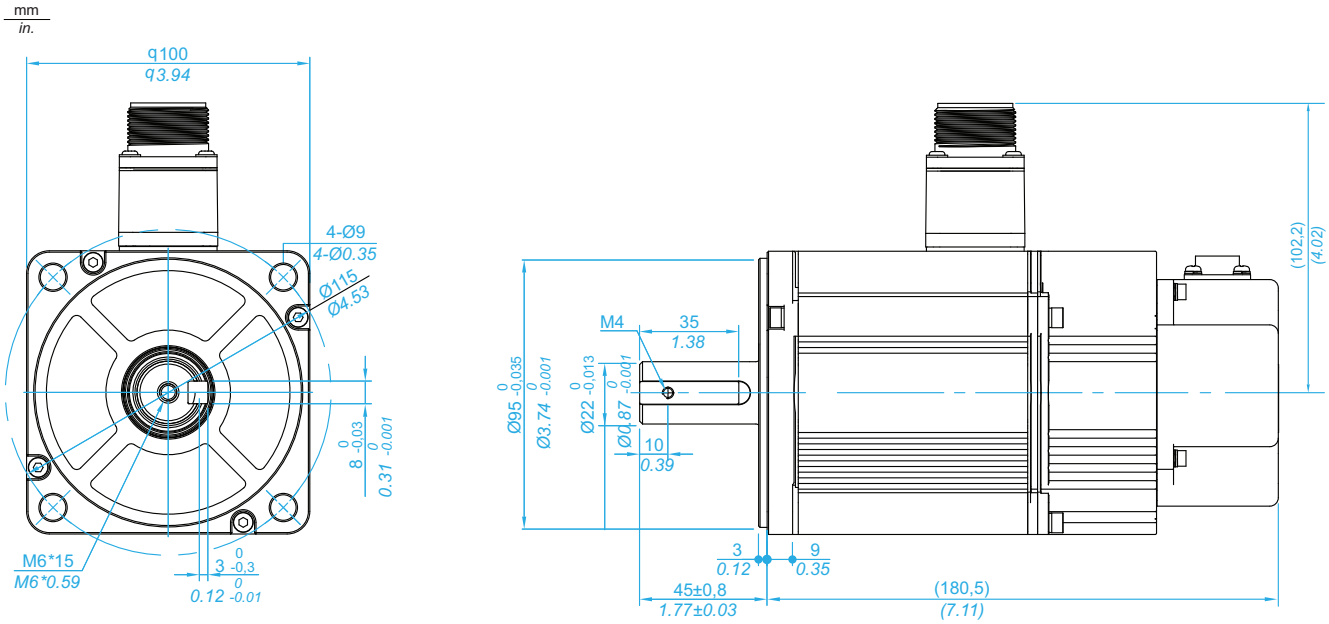

BCH18LH10

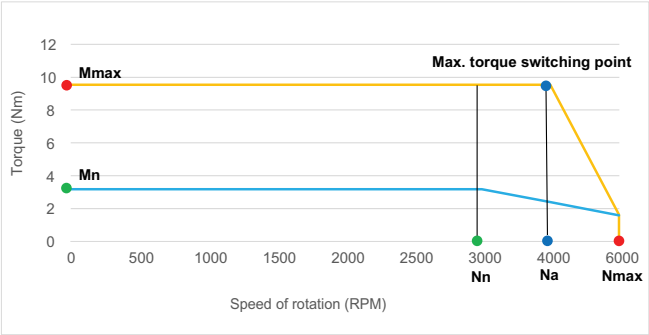

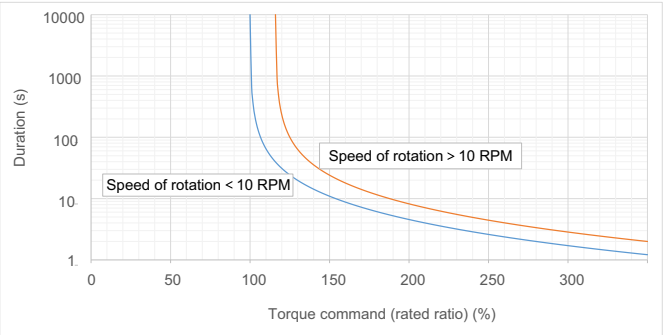

BCH18LH15332A6C

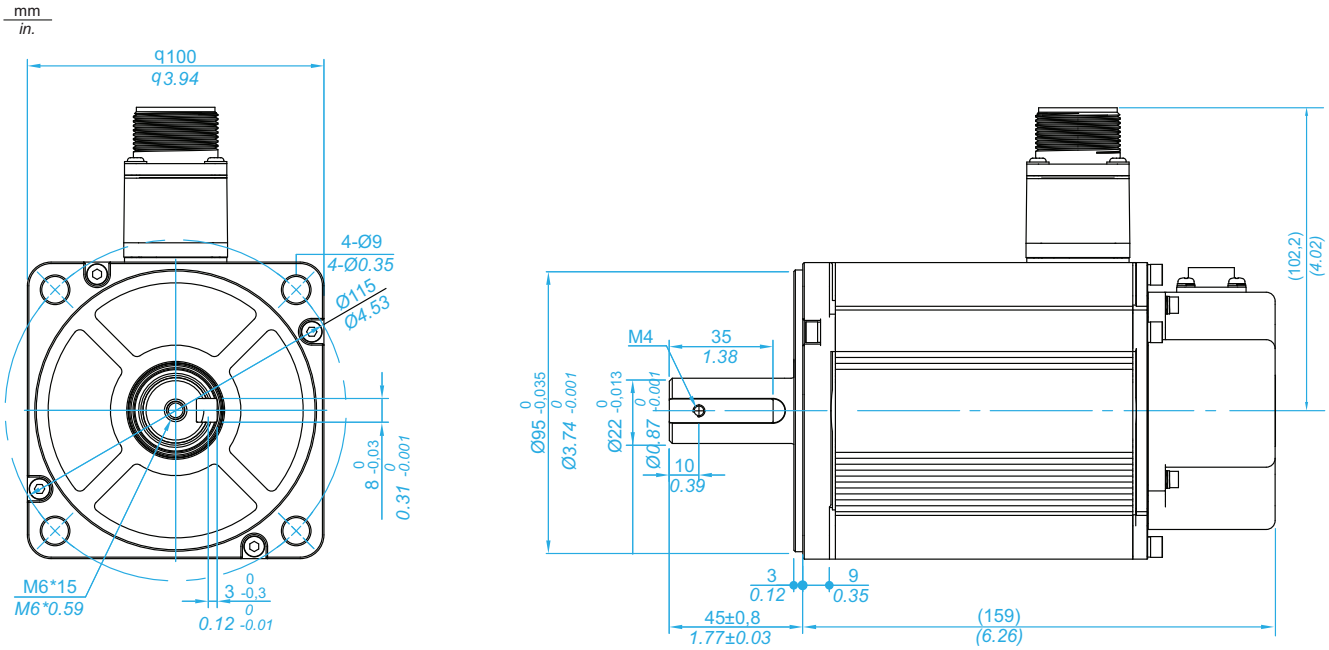

BCH18LH15332F6C

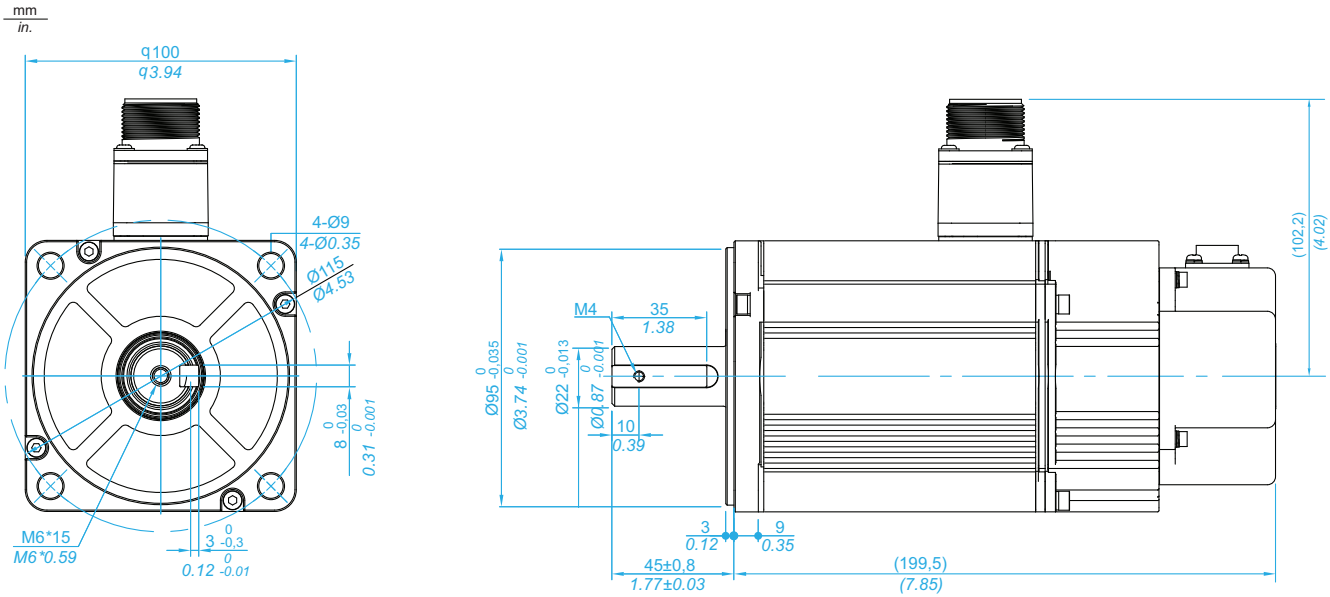

BCH18LH15

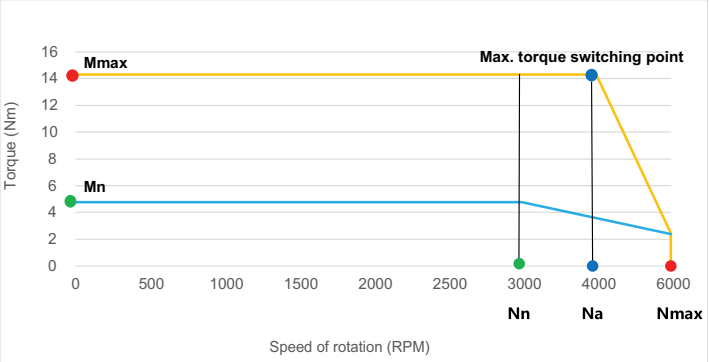

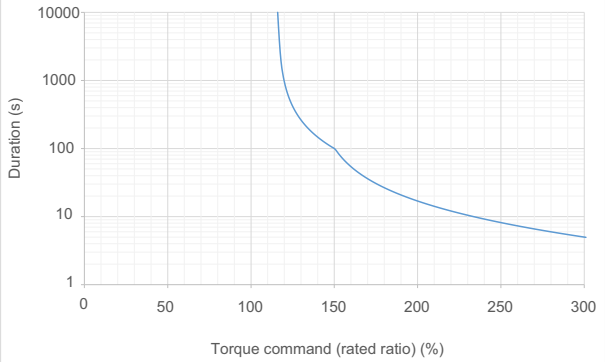

BCH18LH20332A6C

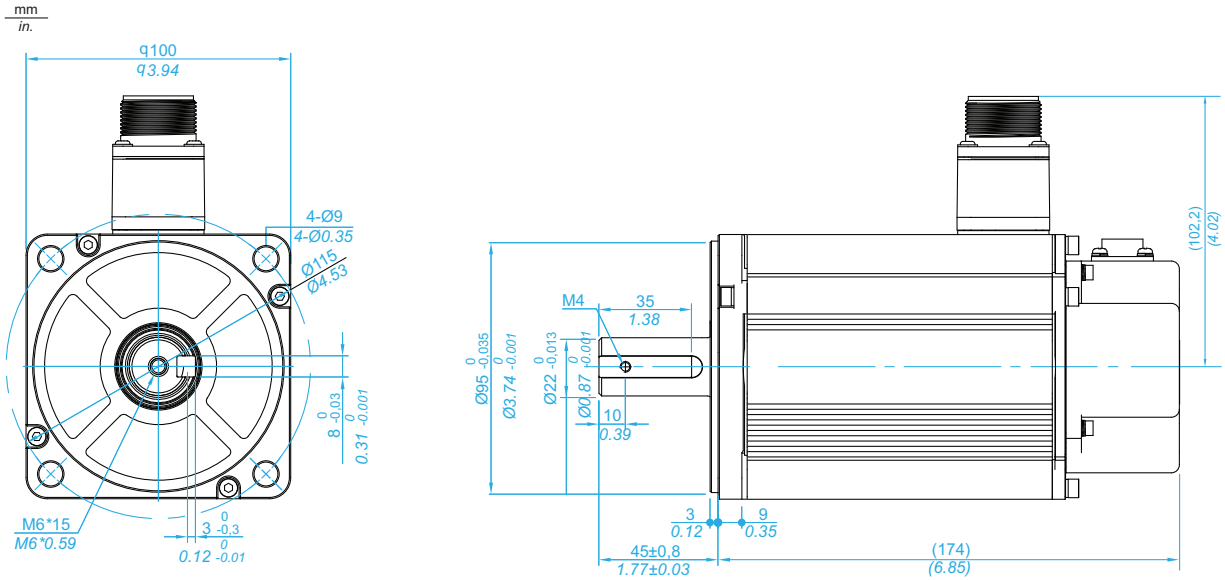

BCH18LH20332F6C

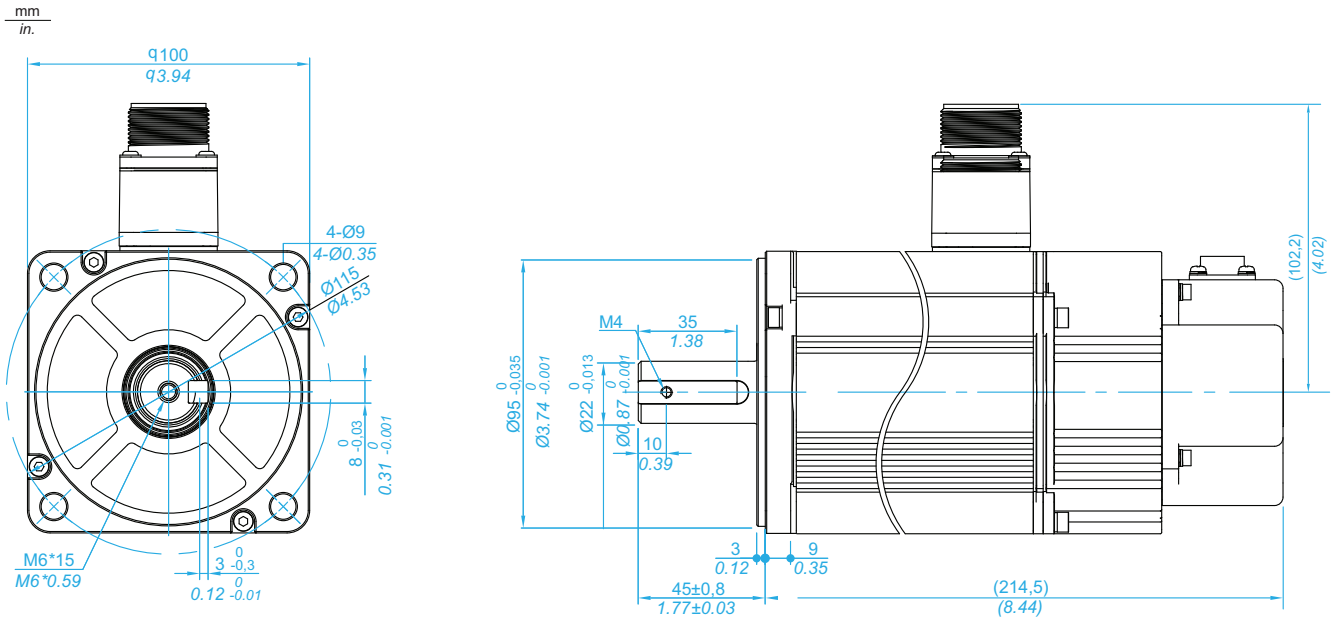

BCH18LH20

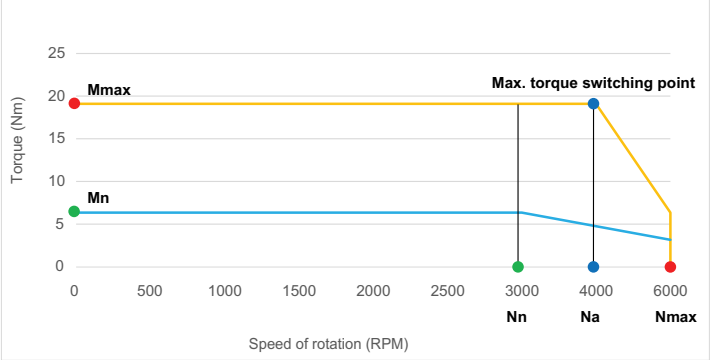

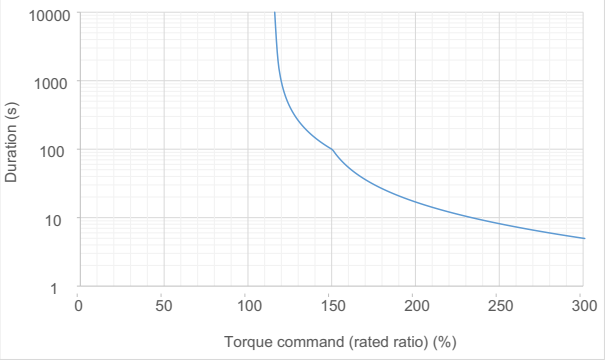

BCH18LM30332A6C

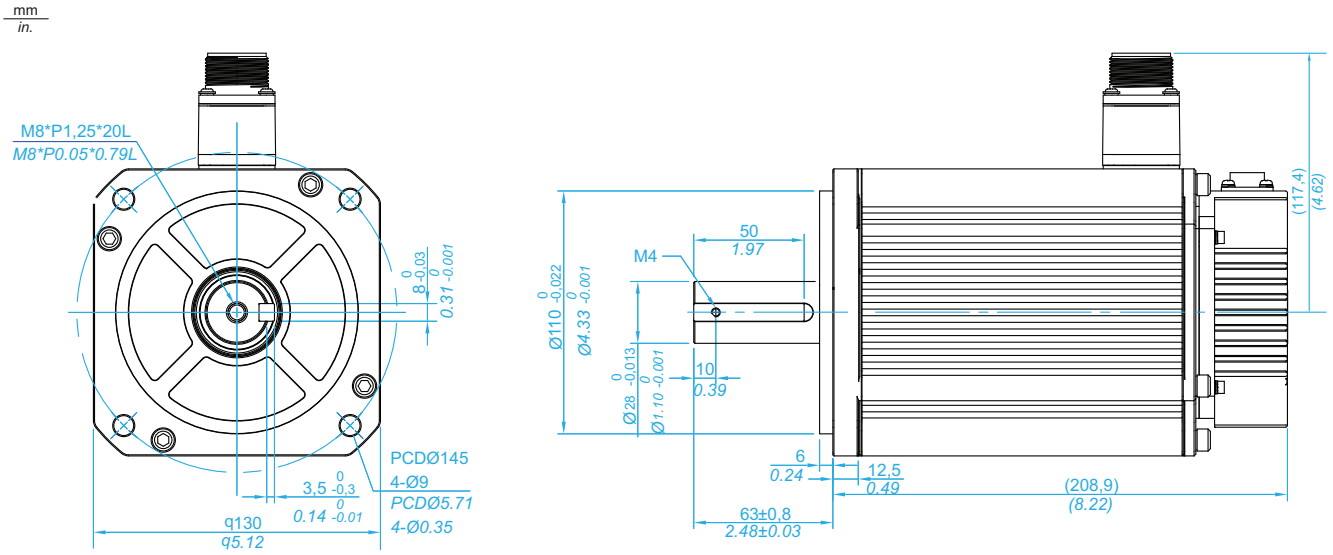

BCH18LM30332F6C

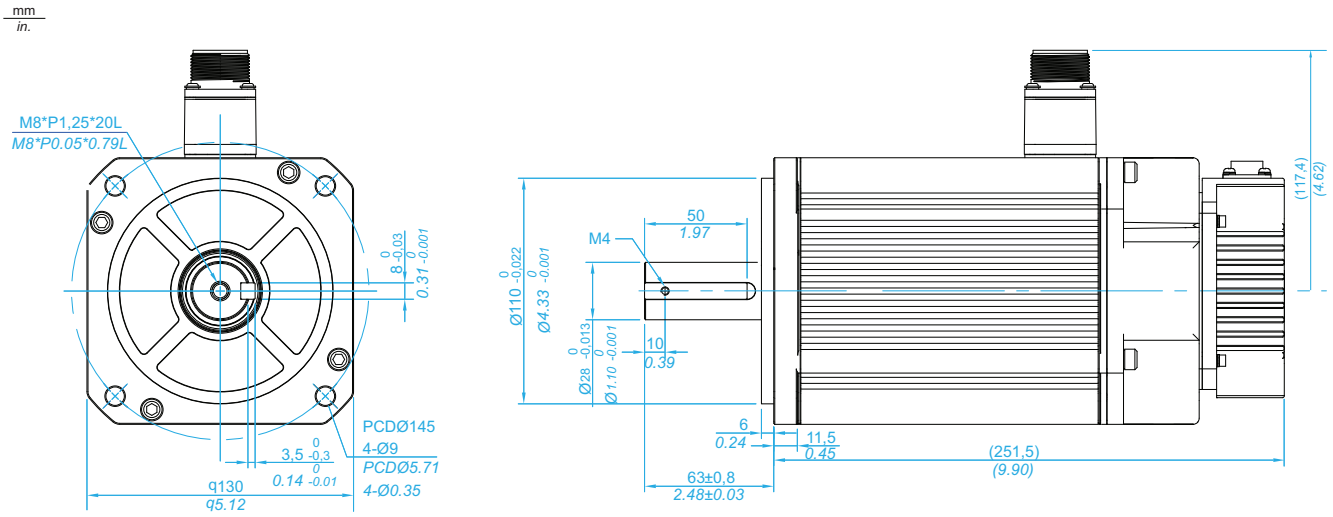

BCH18LM30

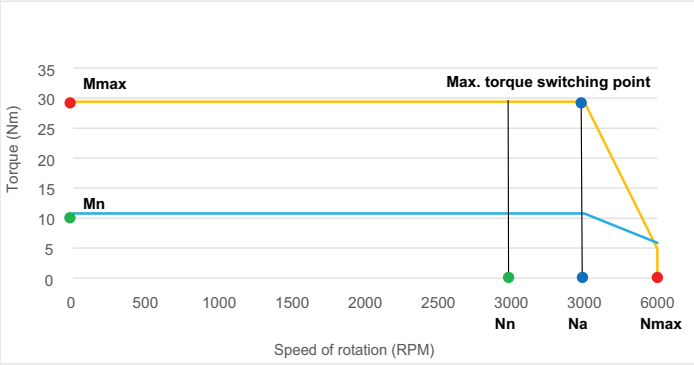

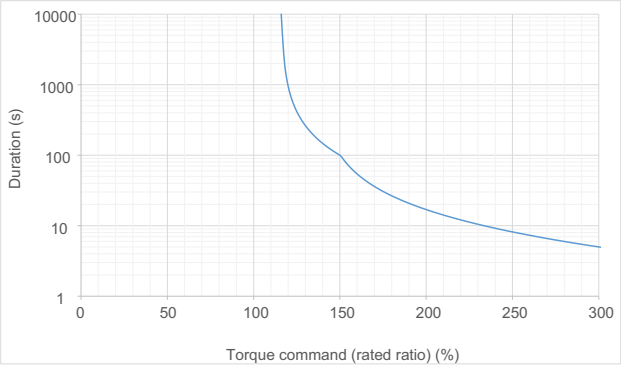

BCH18MBA5332A5C

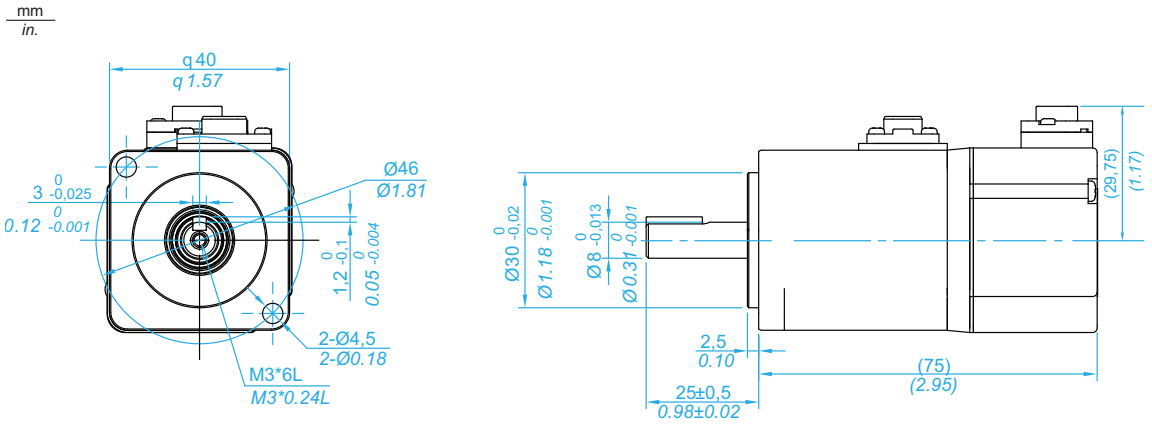

BCH18MBA5332F5C

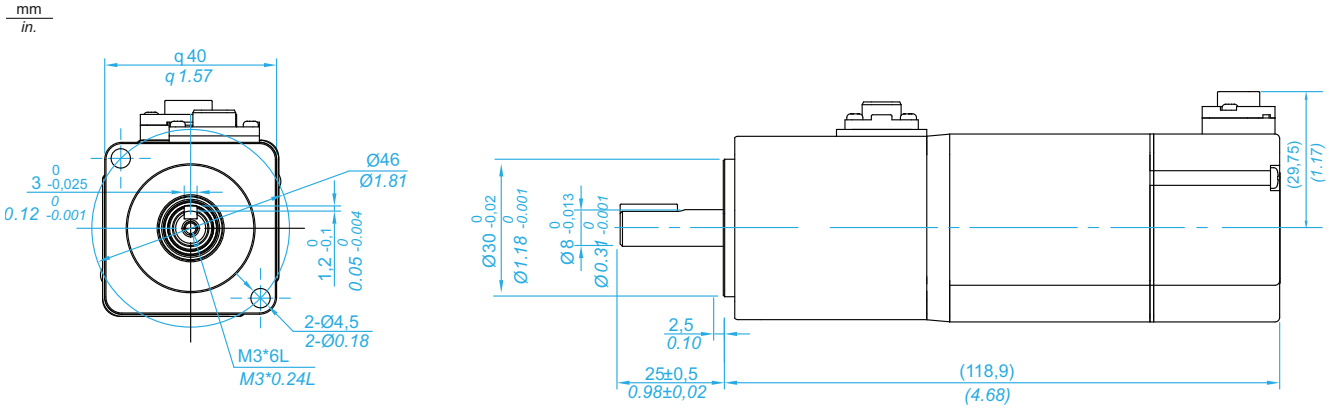

BCH18MBA5

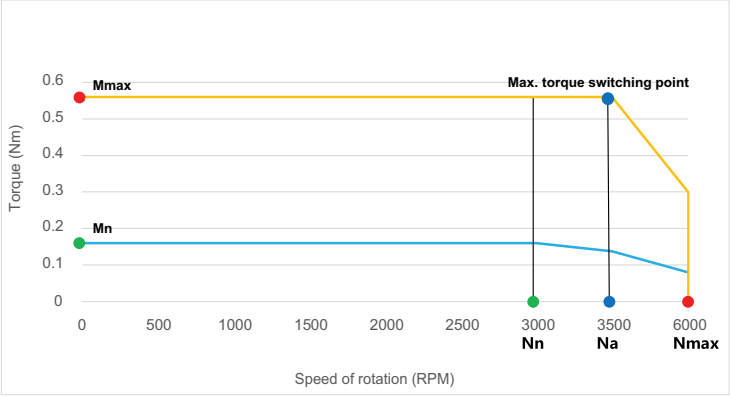

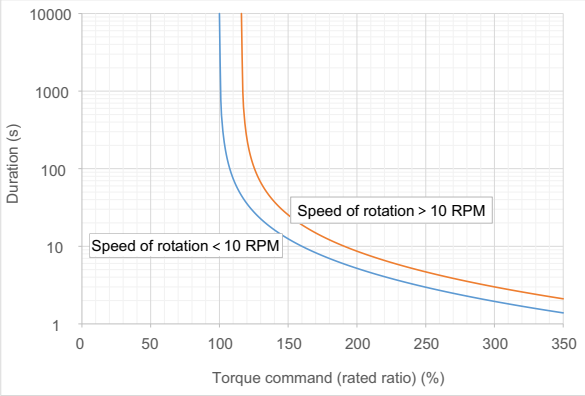

BCH18MB01332A5C

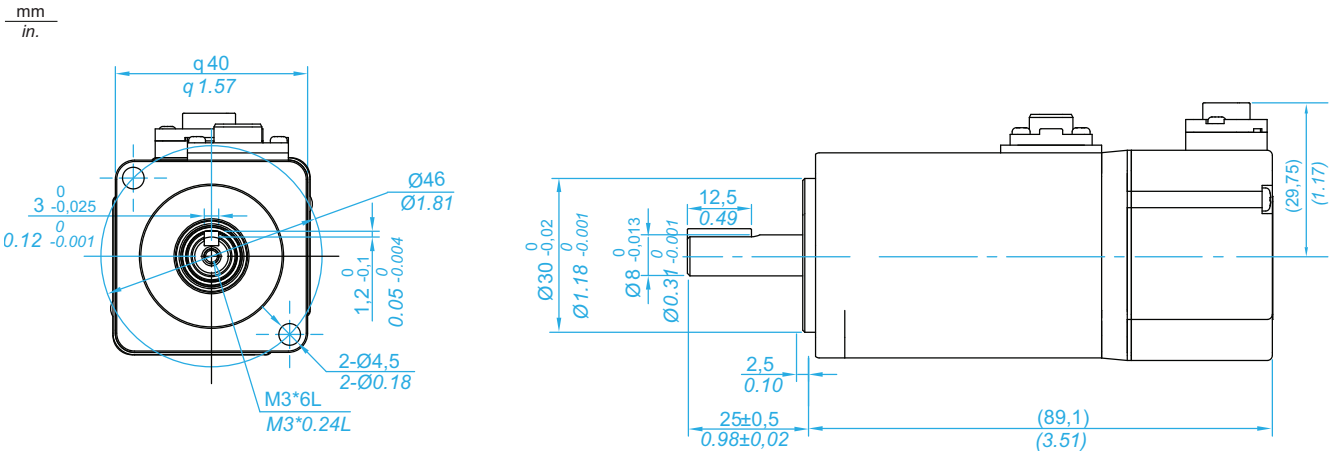

BCH18MB01332F5C

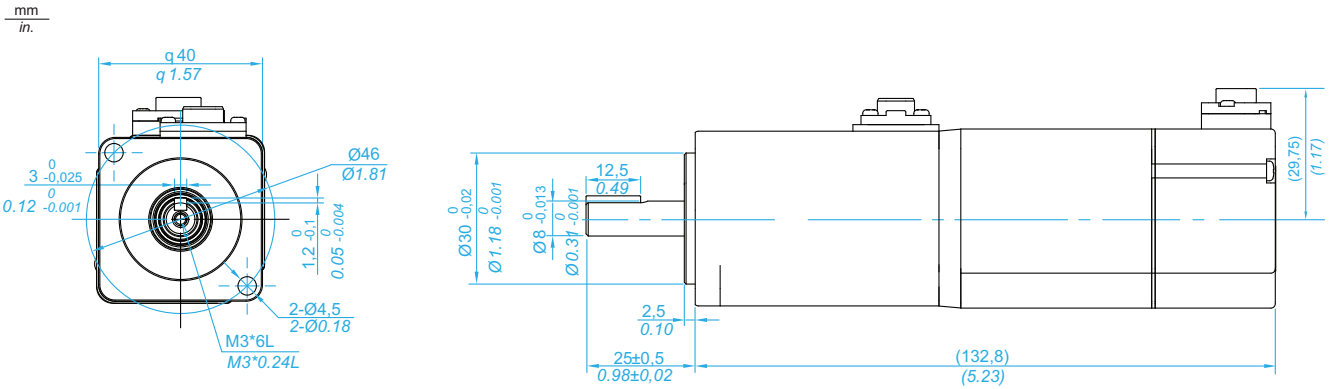

BCH18MB01

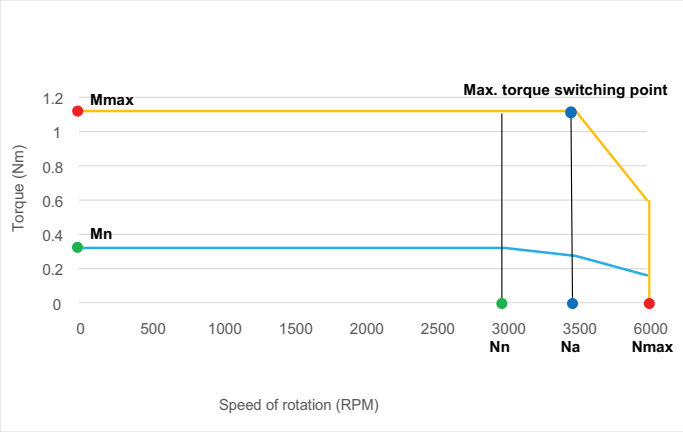

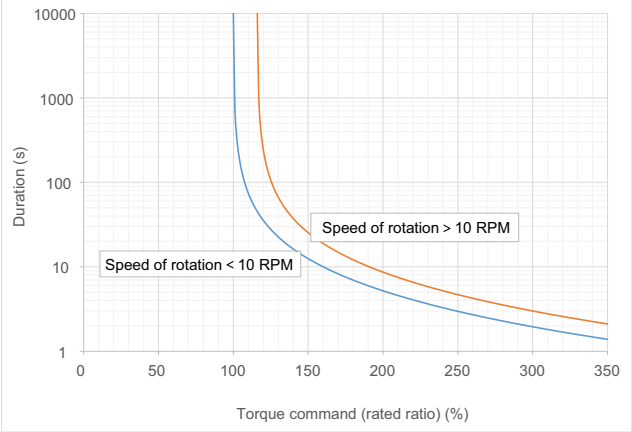

BCH18MD01332A5C

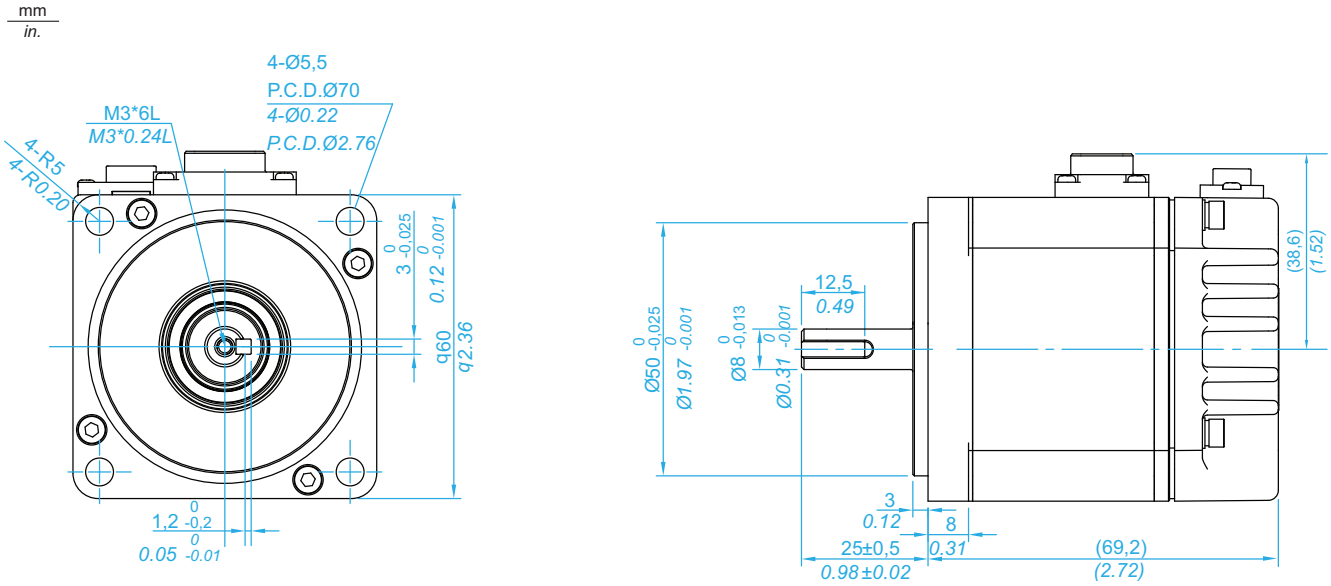

BCH18MD01332F5C

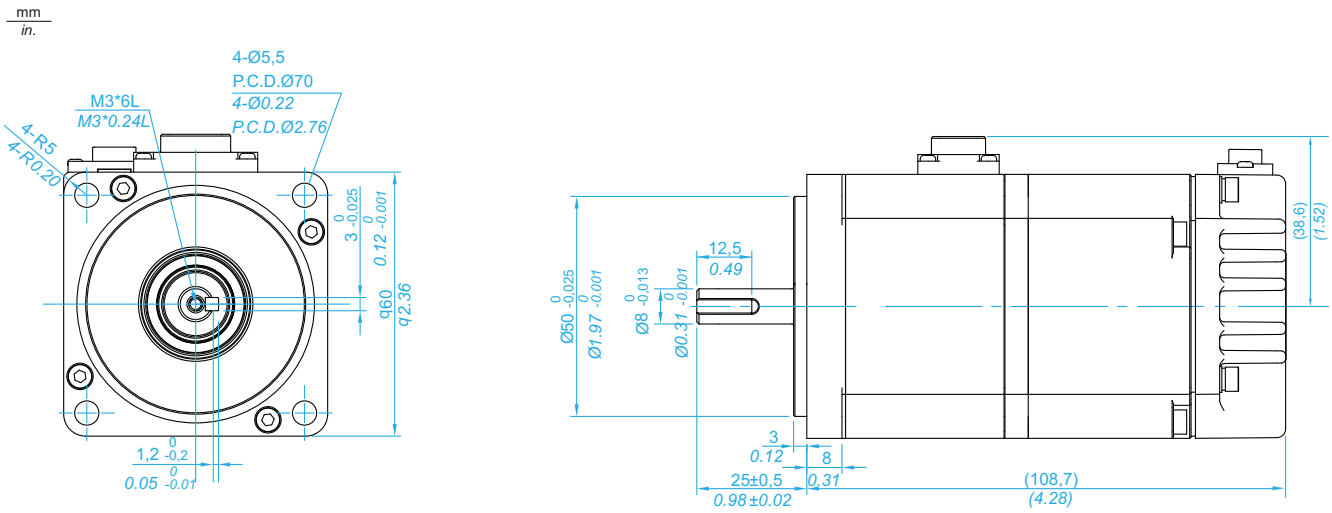

BCH18MD01

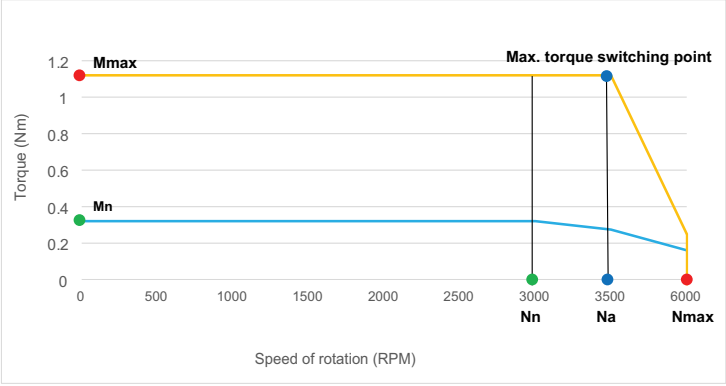

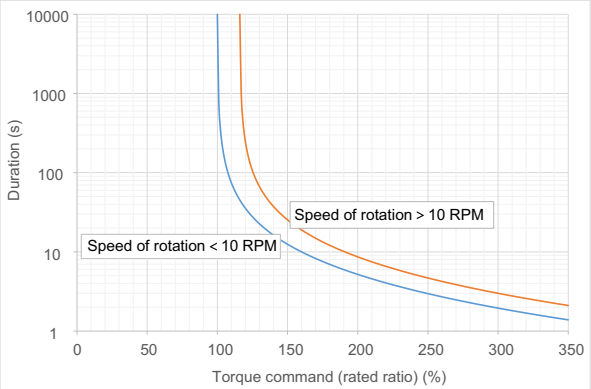

BCH18MD02332A5C

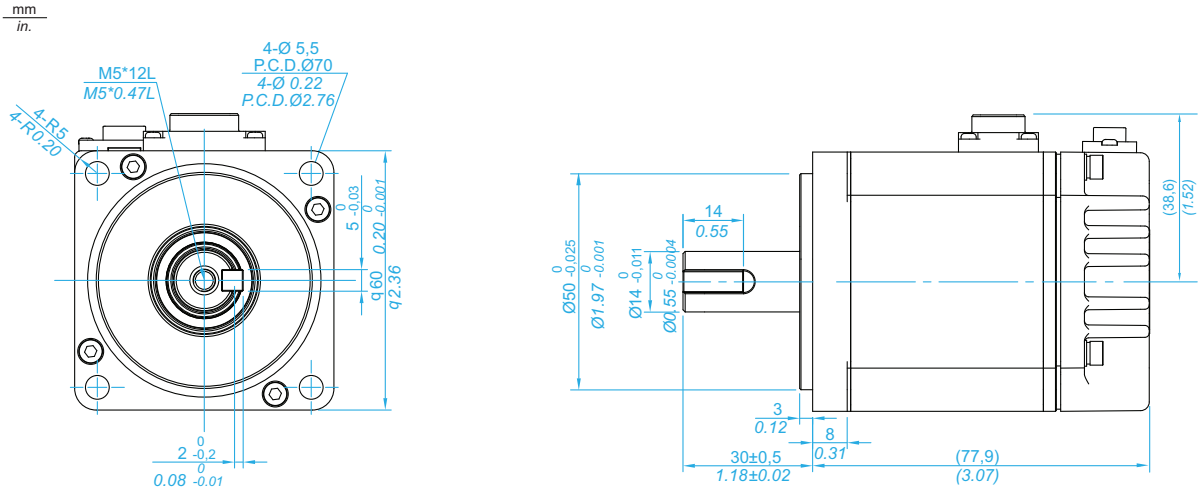

BCH18MD02332F5C

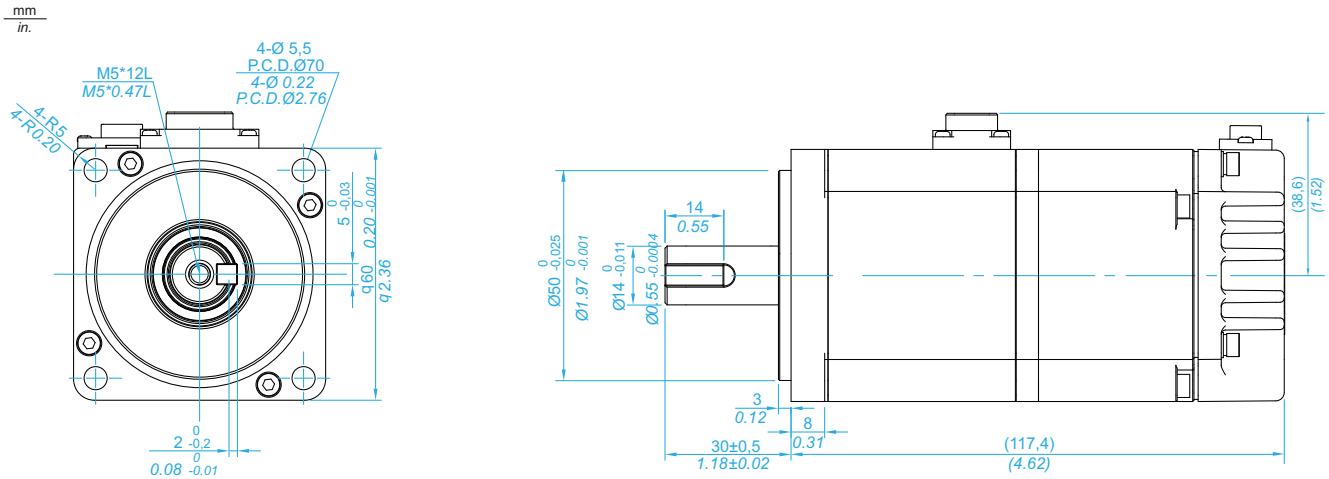

BCH18MD02

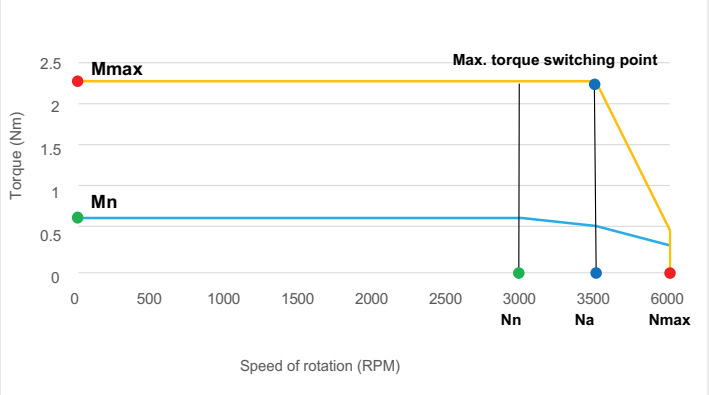

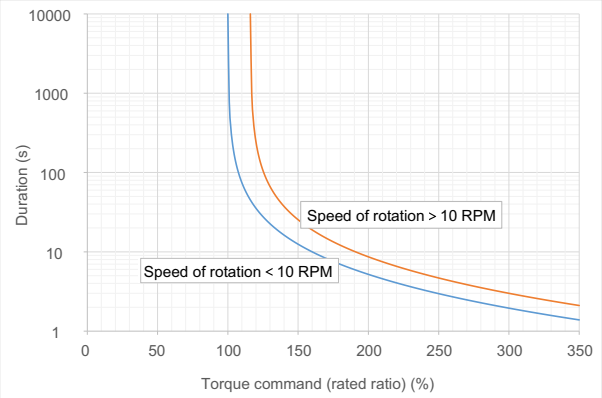

BCH18MD04332A5C

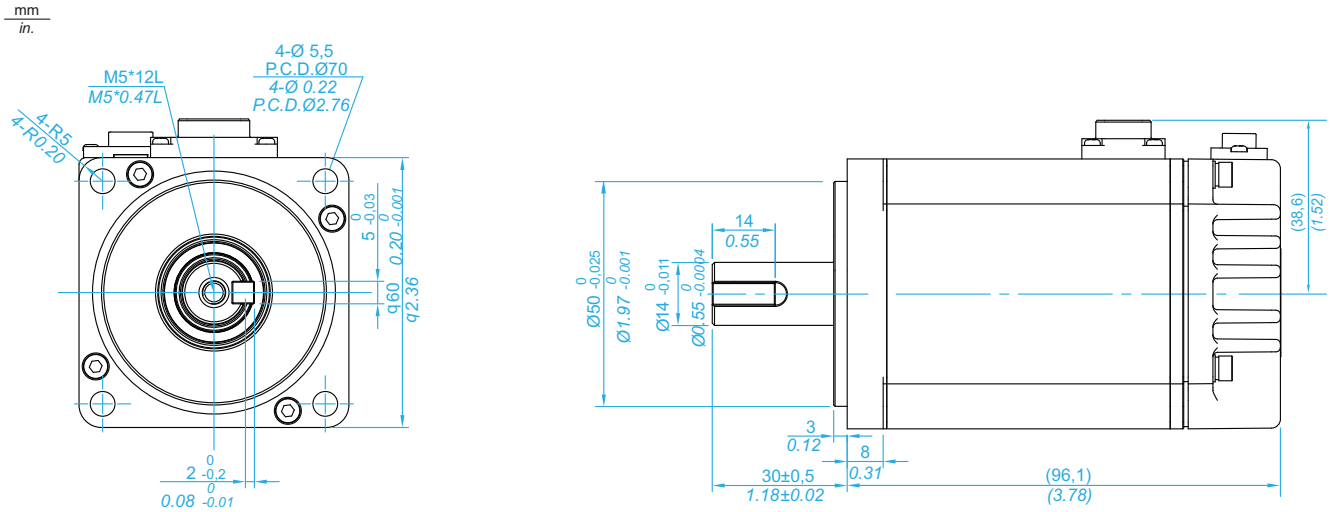

BCH18MD04332F5C

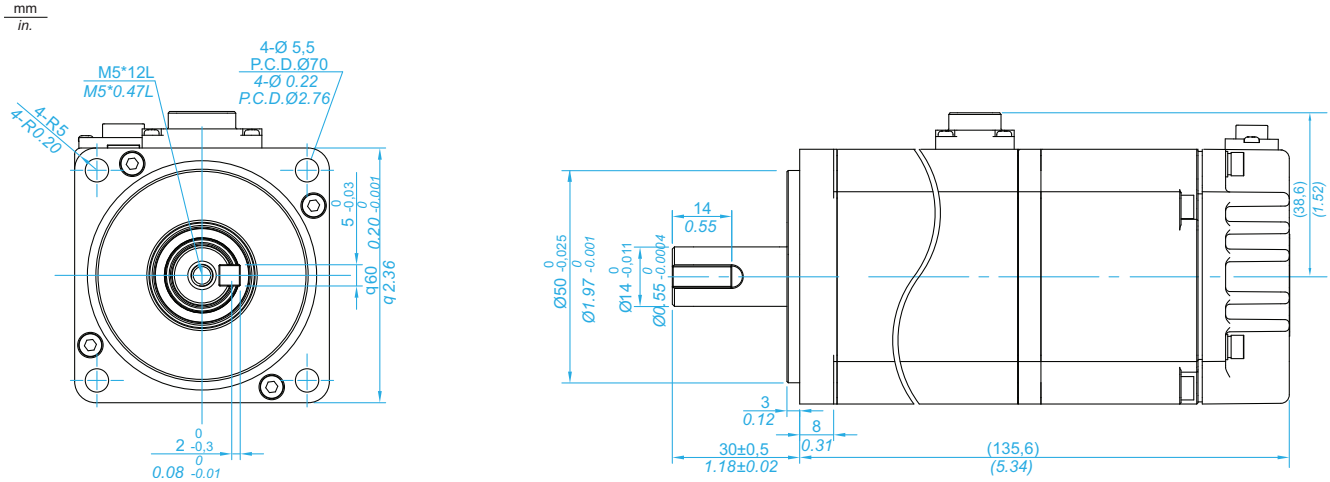

BCH18MD04

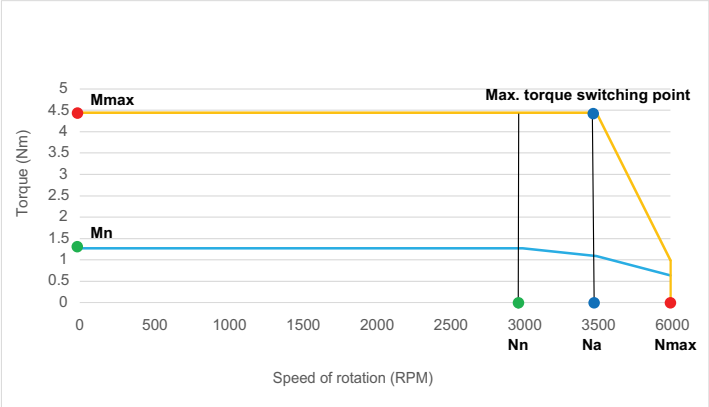

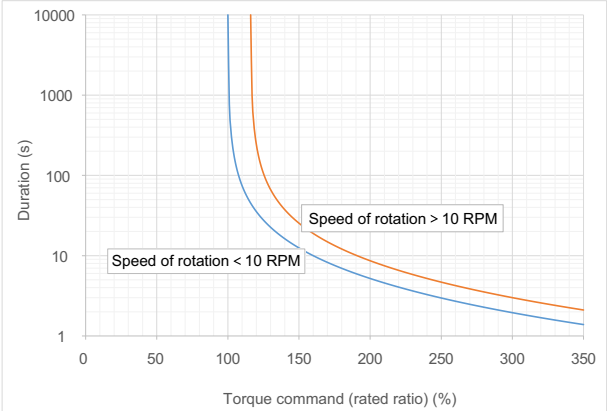

BCH18MF02332A5C

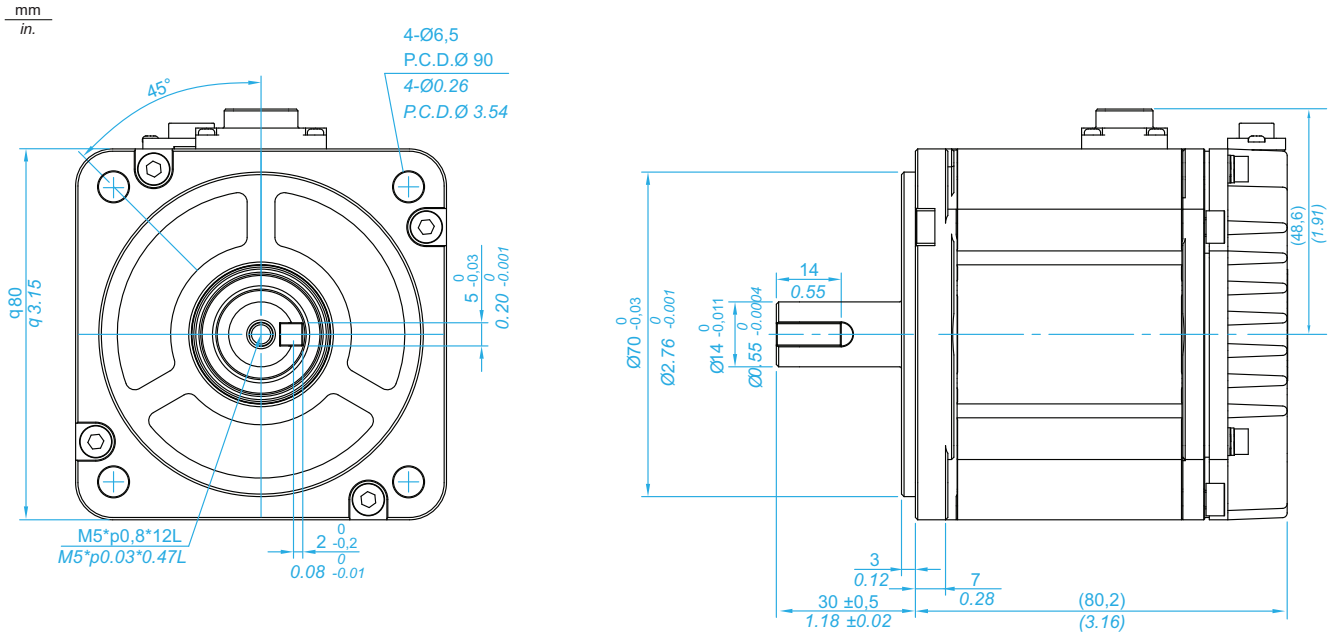

BCH18MF02332F5C

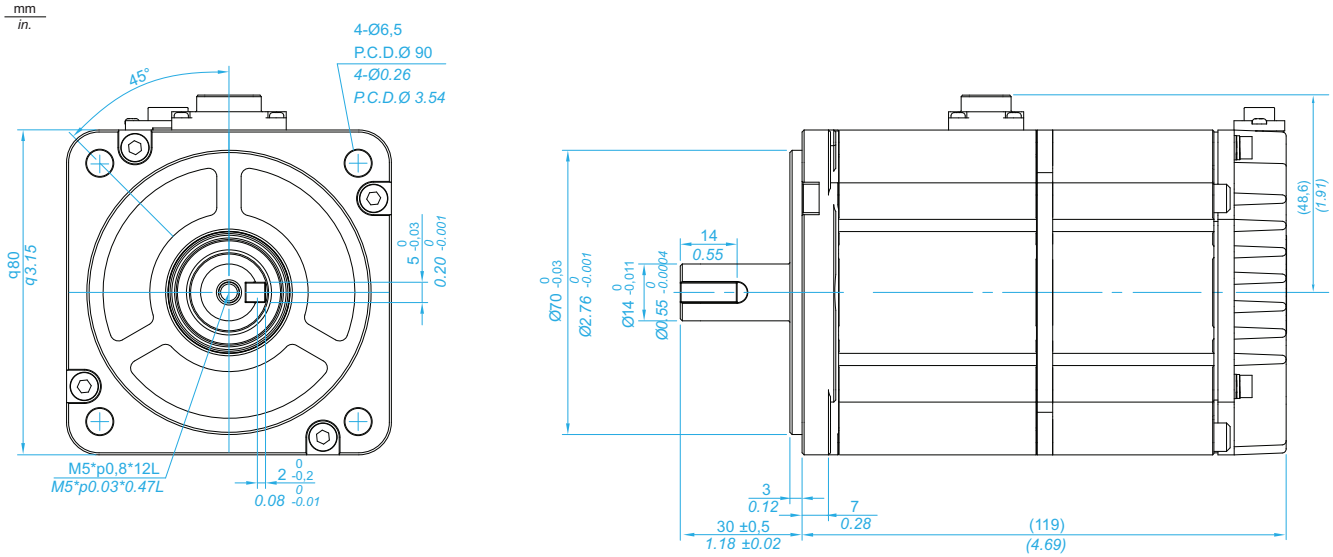

BCH18MF02

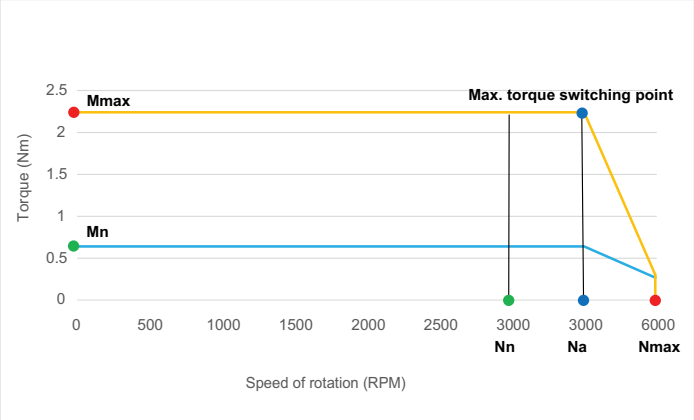

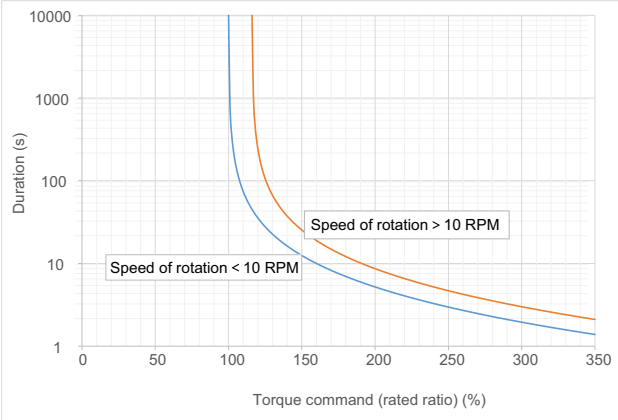

BCH18MF04332A5C

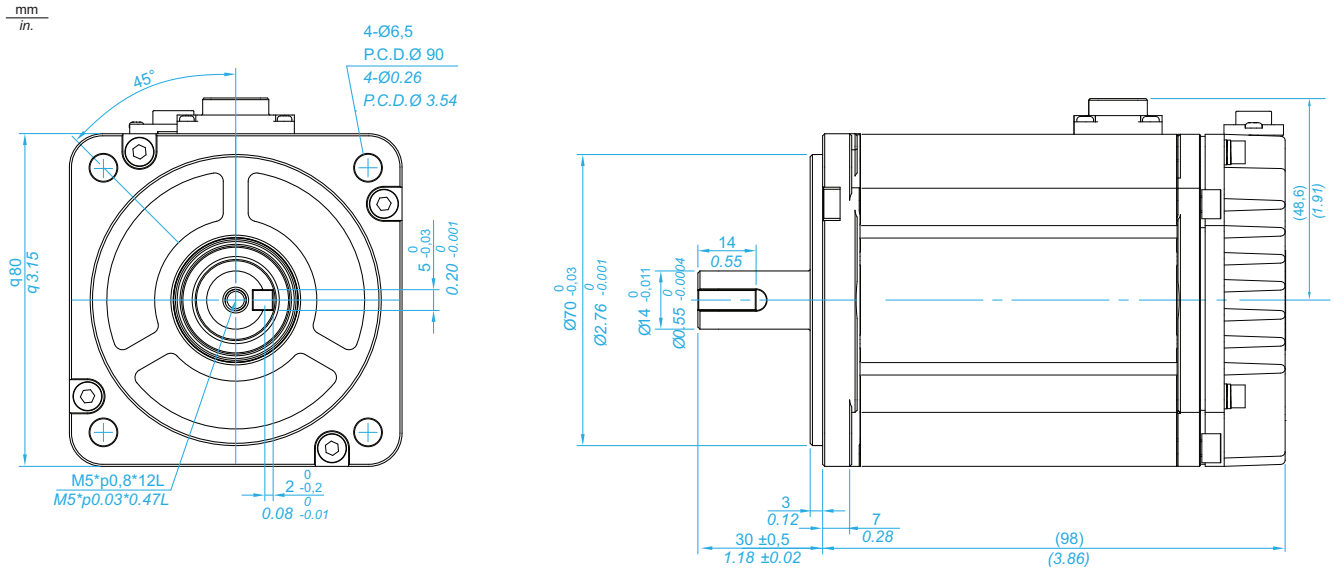

BCH18MF04332F5C

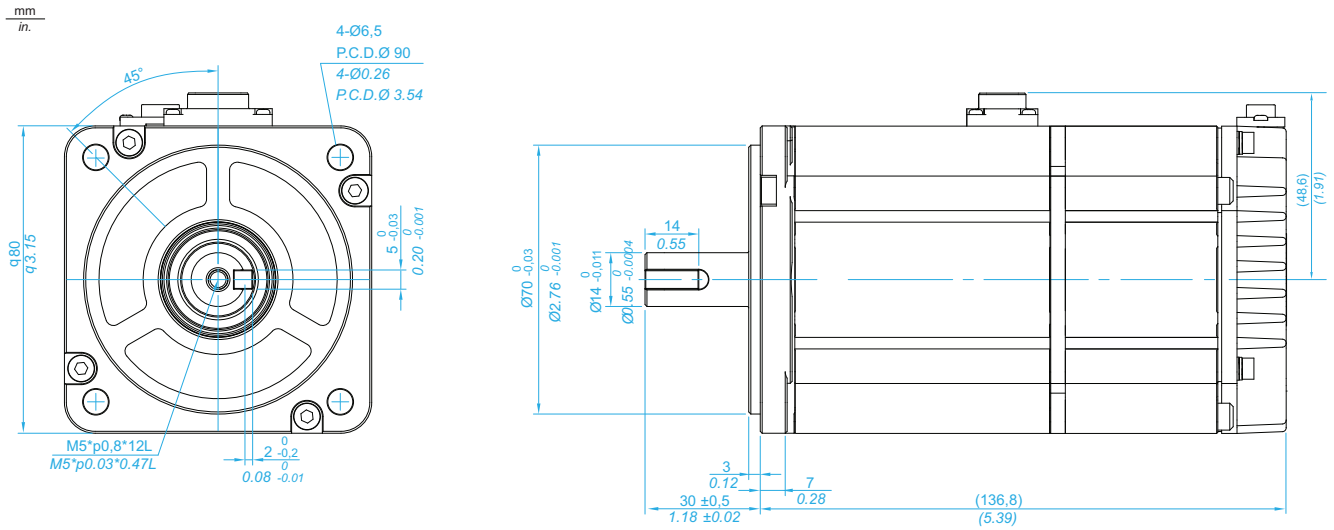

BCH18MF04

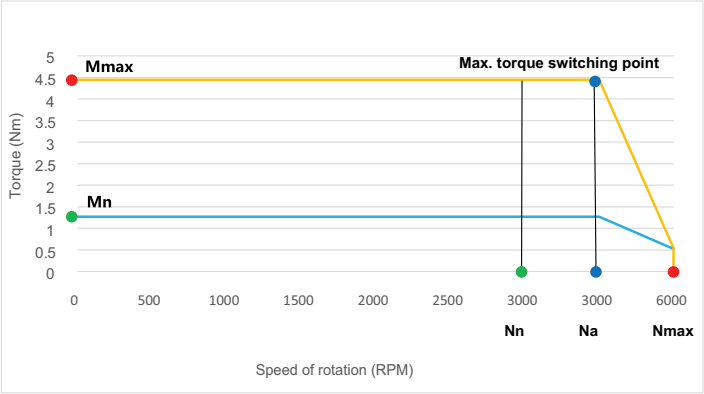

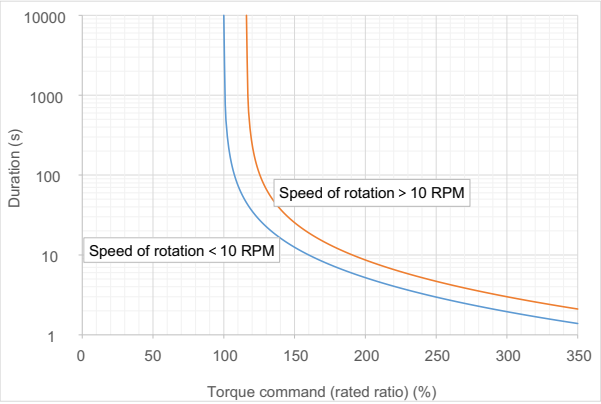

BCH18MF07332A5C

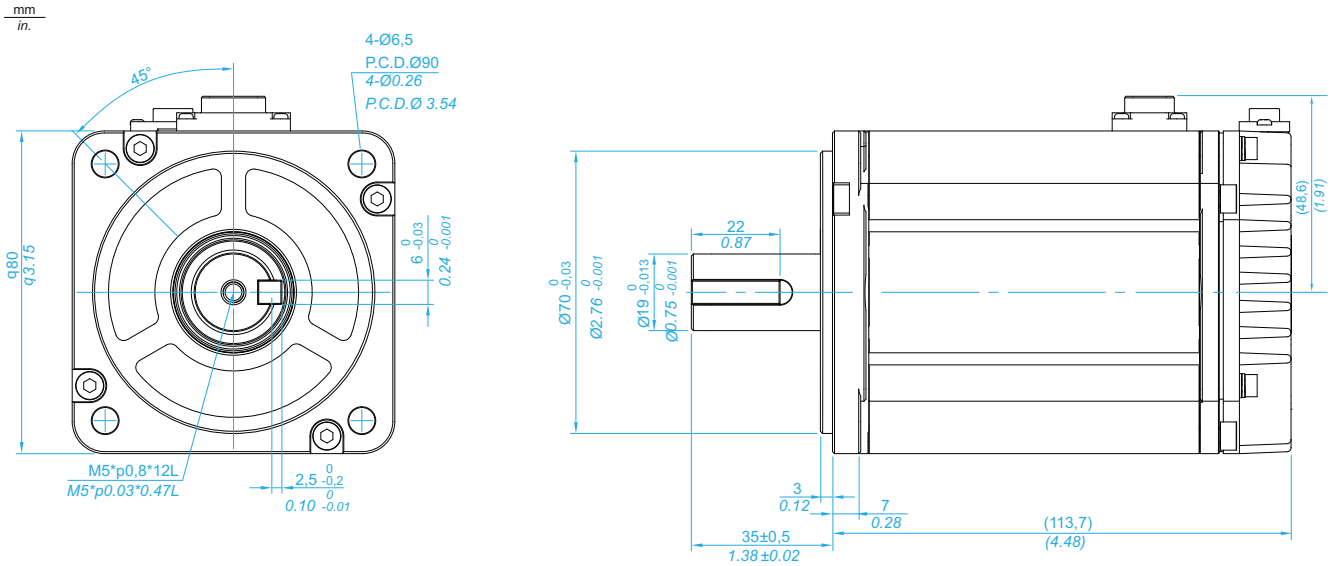

BCH18MF07332F5C

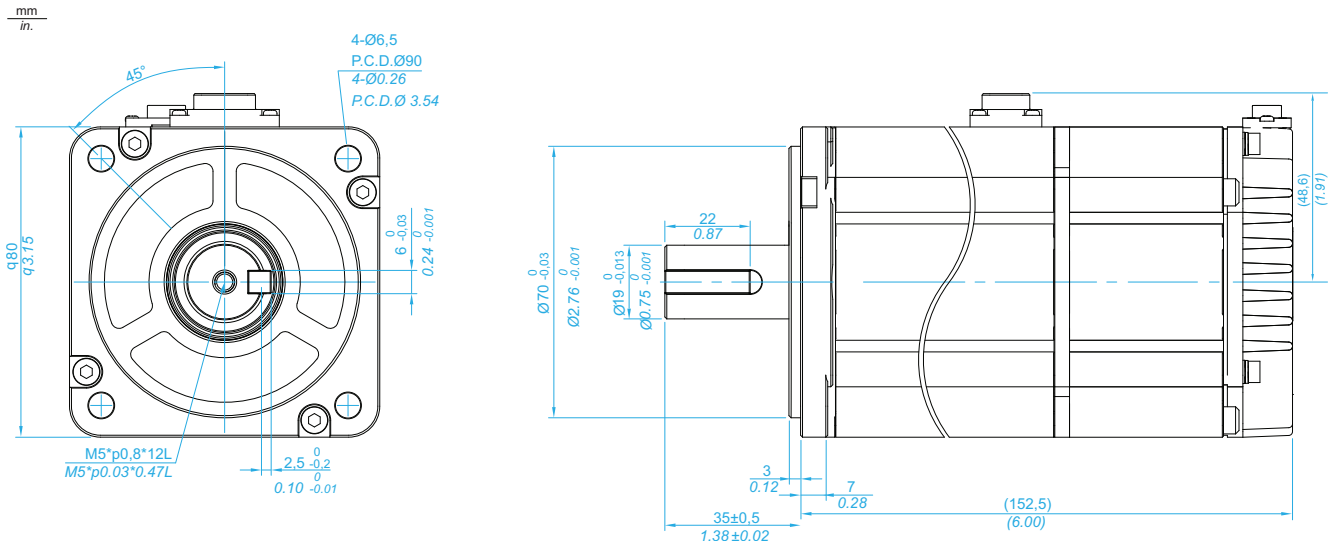

BCH18MF07

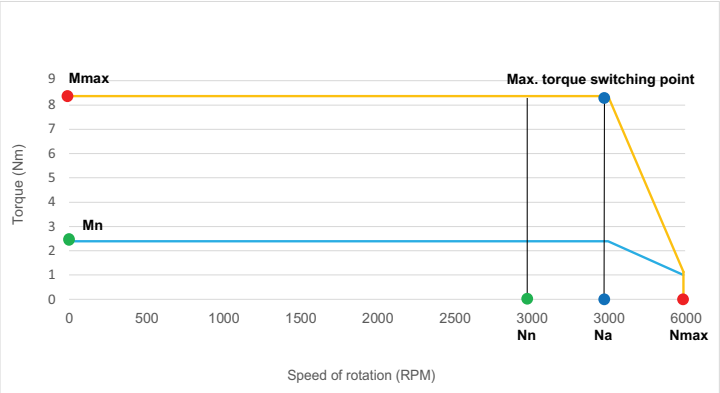

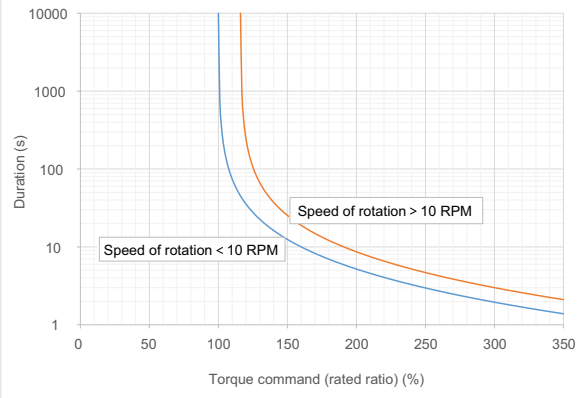

BCH18MF10332A5C

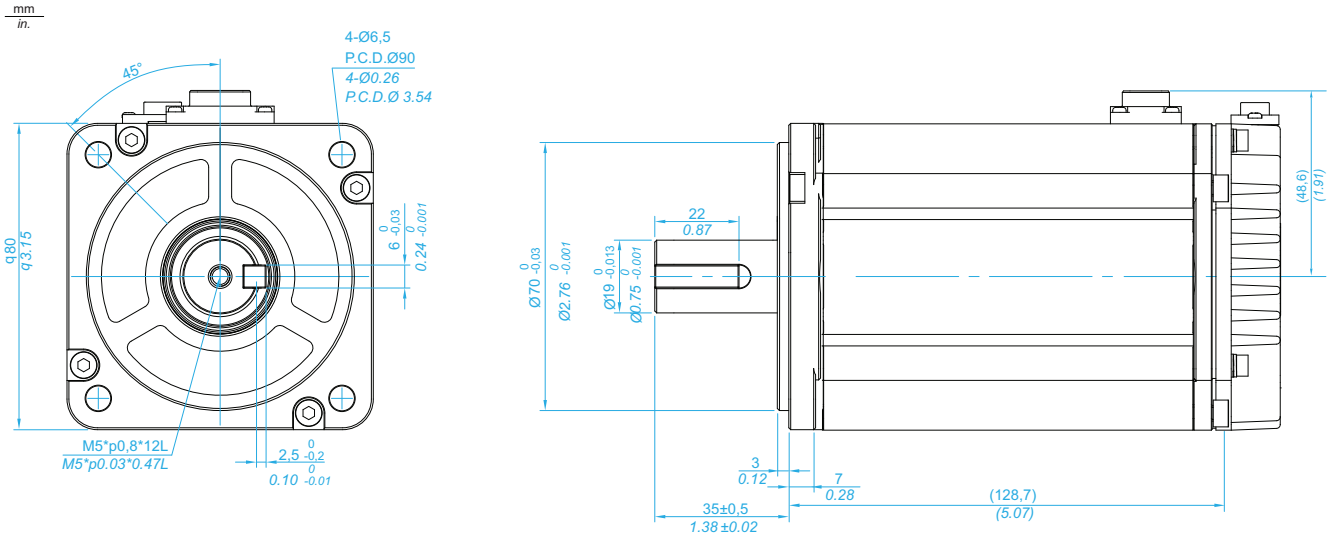

BCH18MF10332F5C

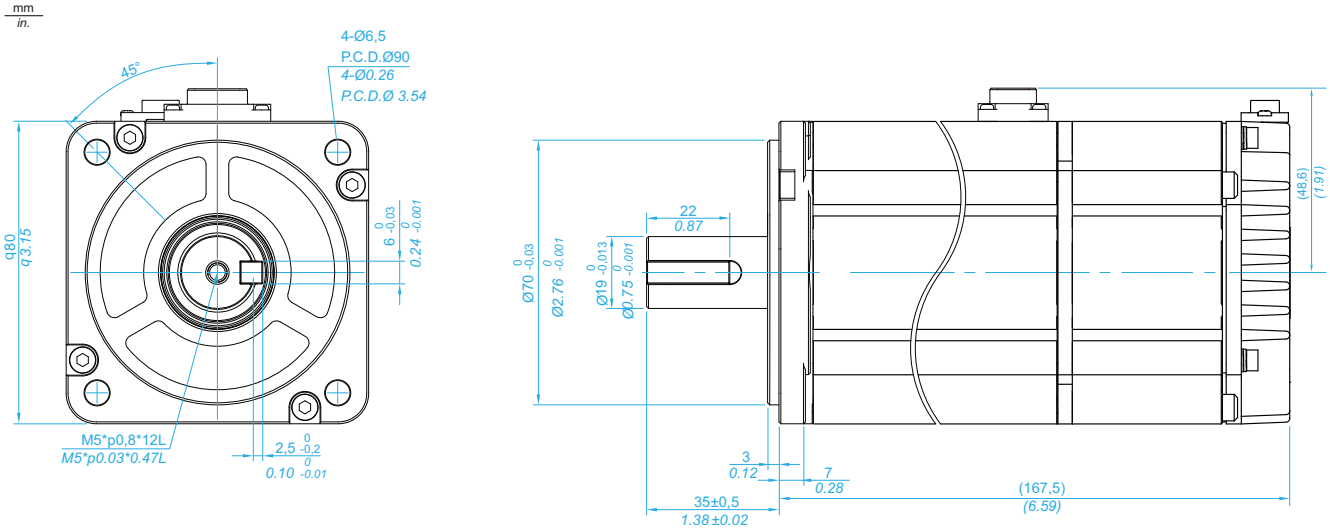

BCH18MF10

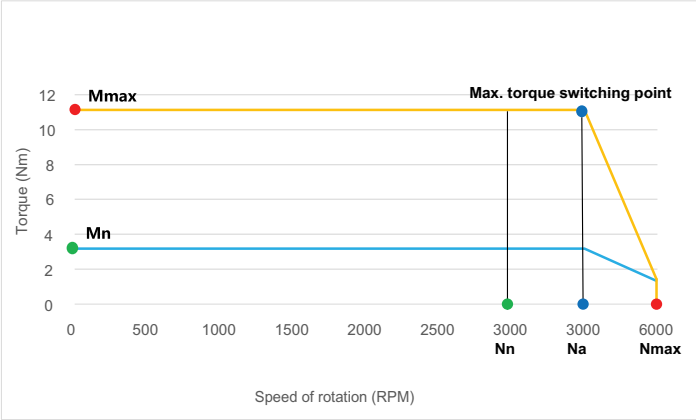

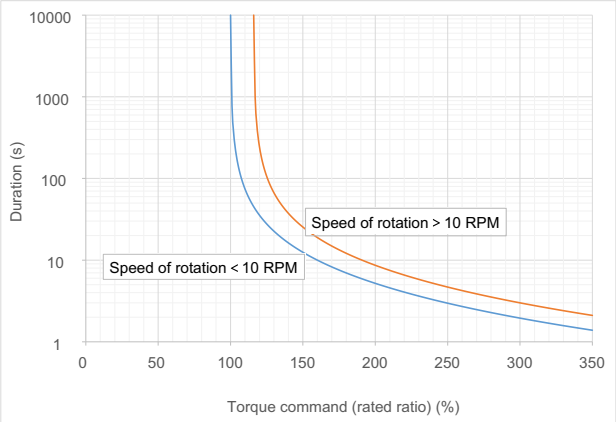

BCH18MM08132A6C

mm
in.

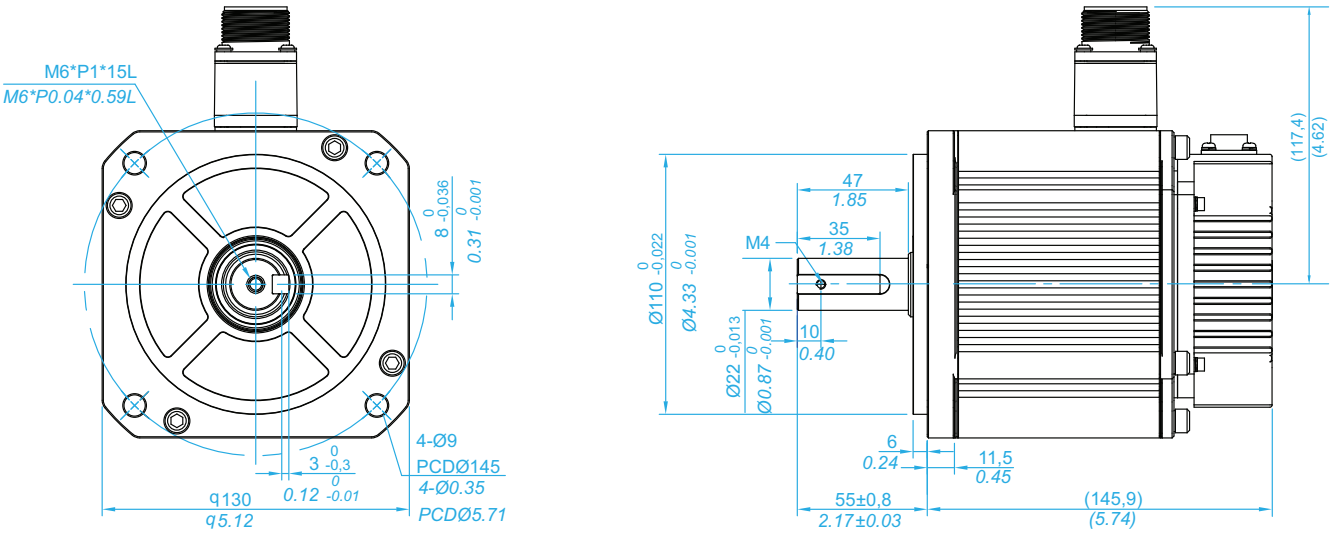

BCH18MM08132F6C

mm
in.

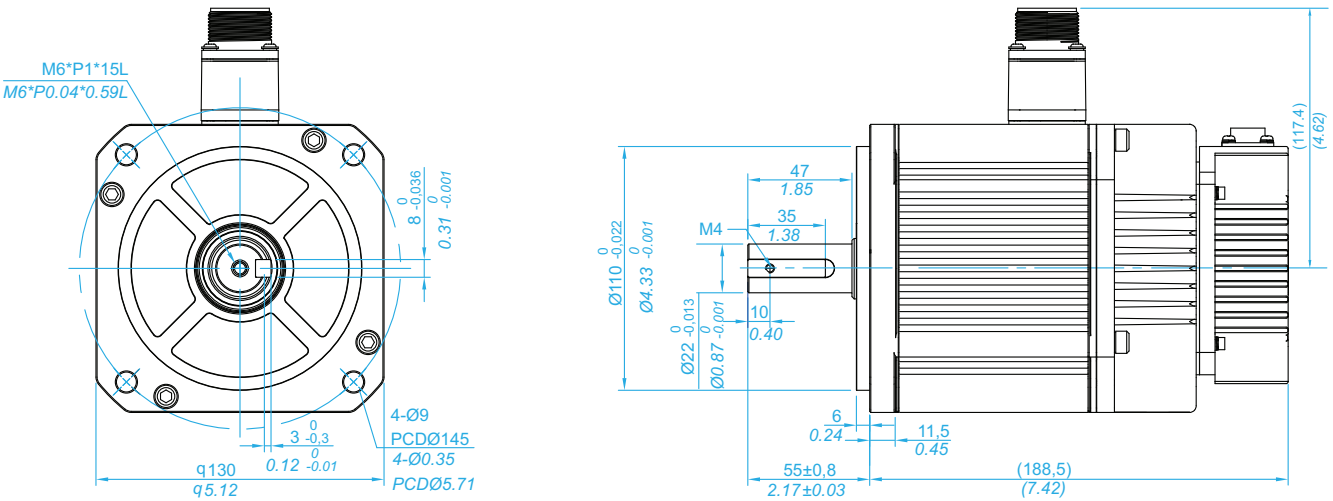

BCH18MM08

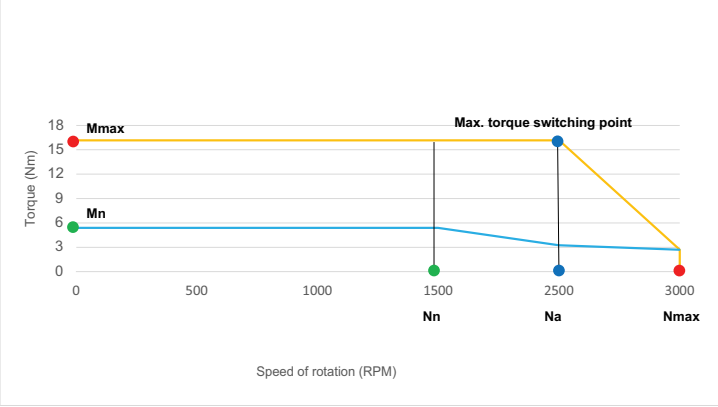

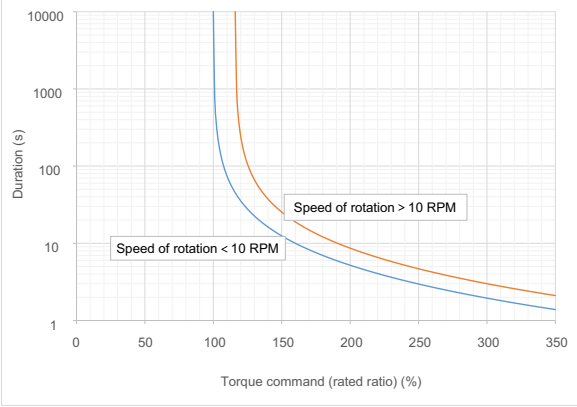

BCH18MM10232A6C

mm
in.

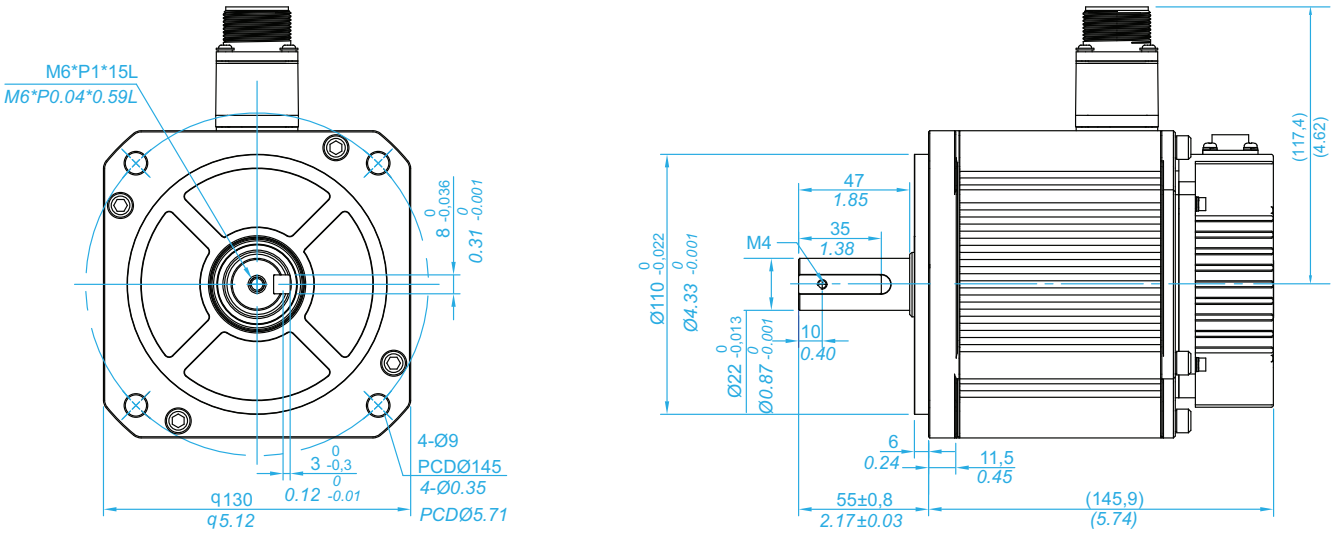

BCH18MM10232F6C

mm
in.

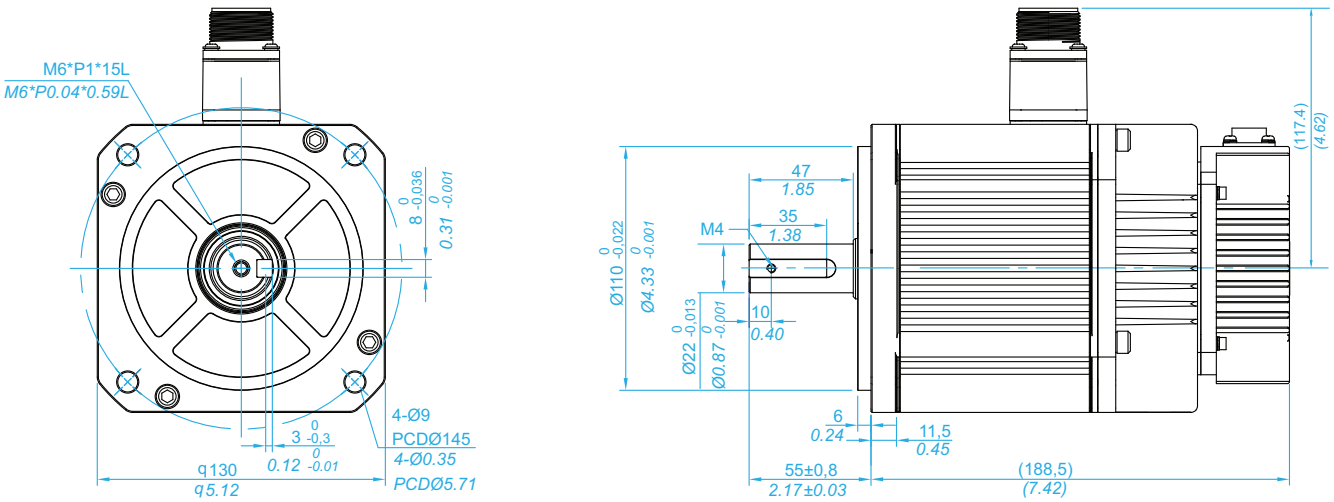

BCH18MM10

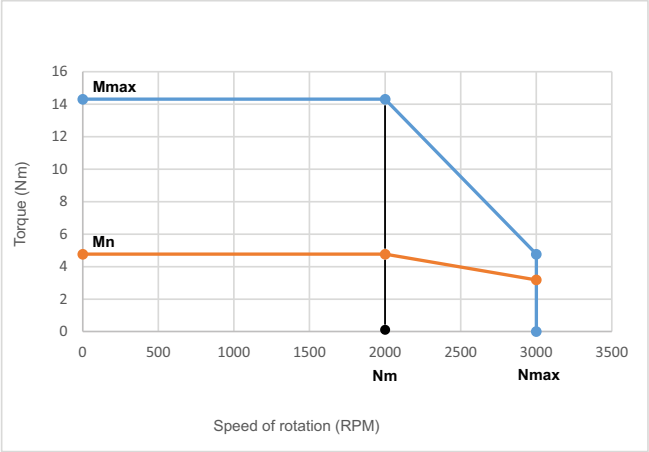

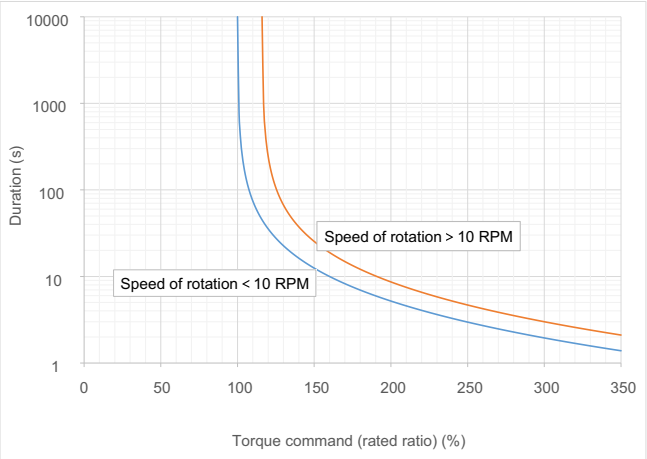

BCH18MM13132A6C

mm / in.

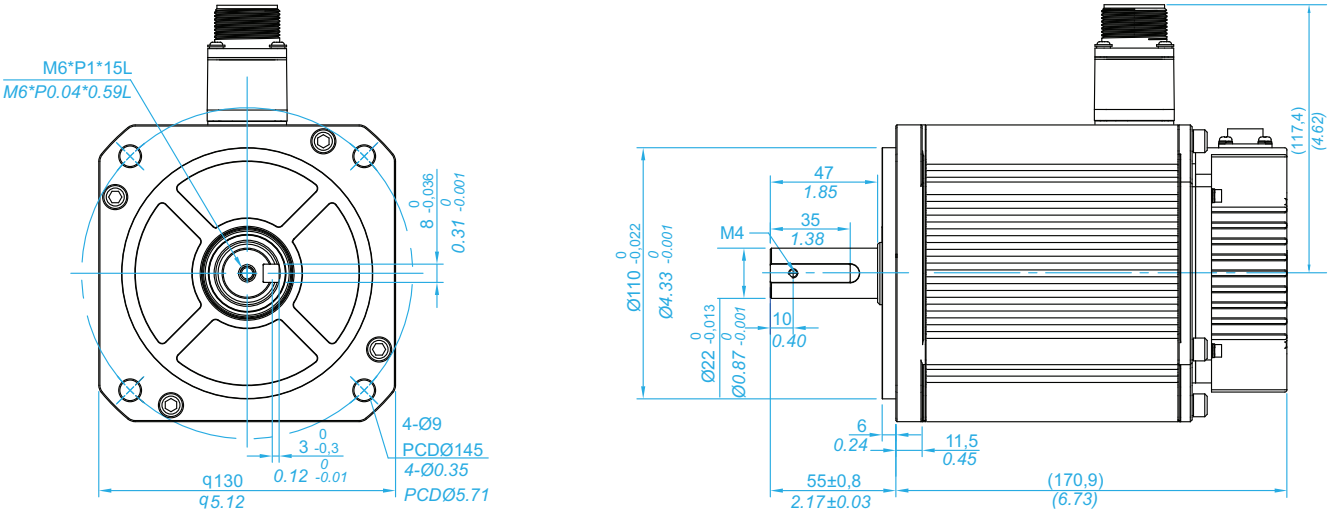

BCH18MM13132F6C

mm / in.

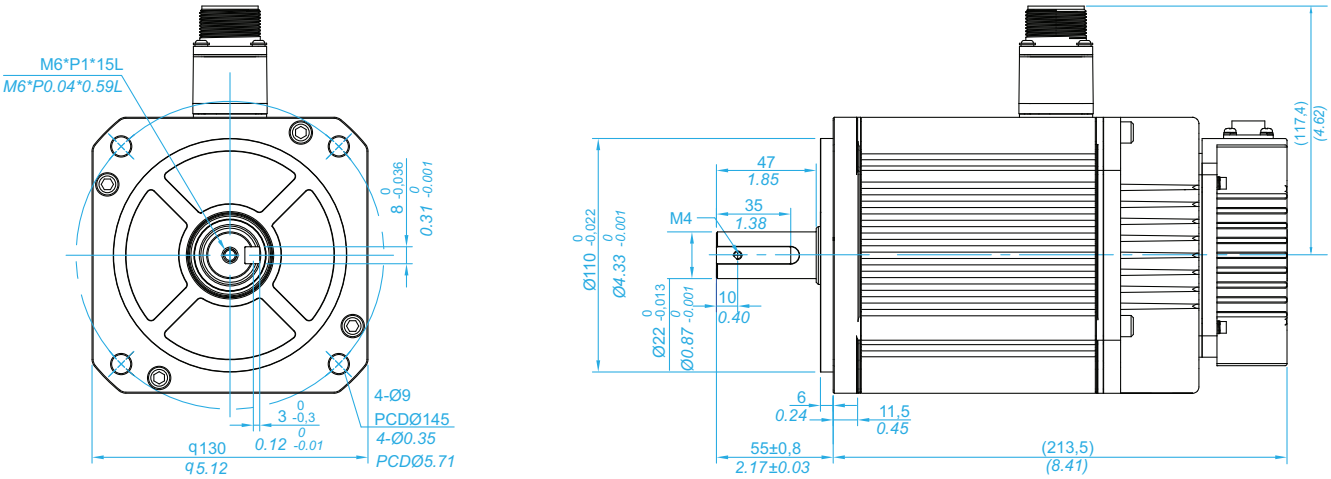

BCH18MM13

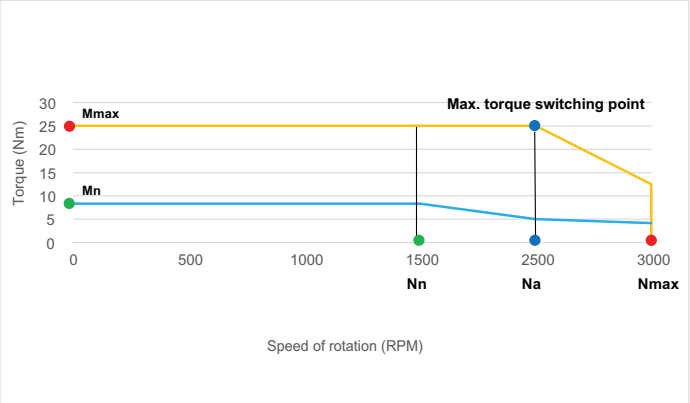

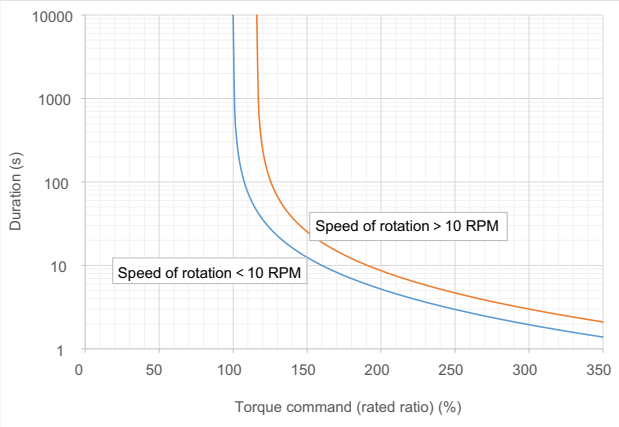

BCH18MM15232A6C

mm / in.

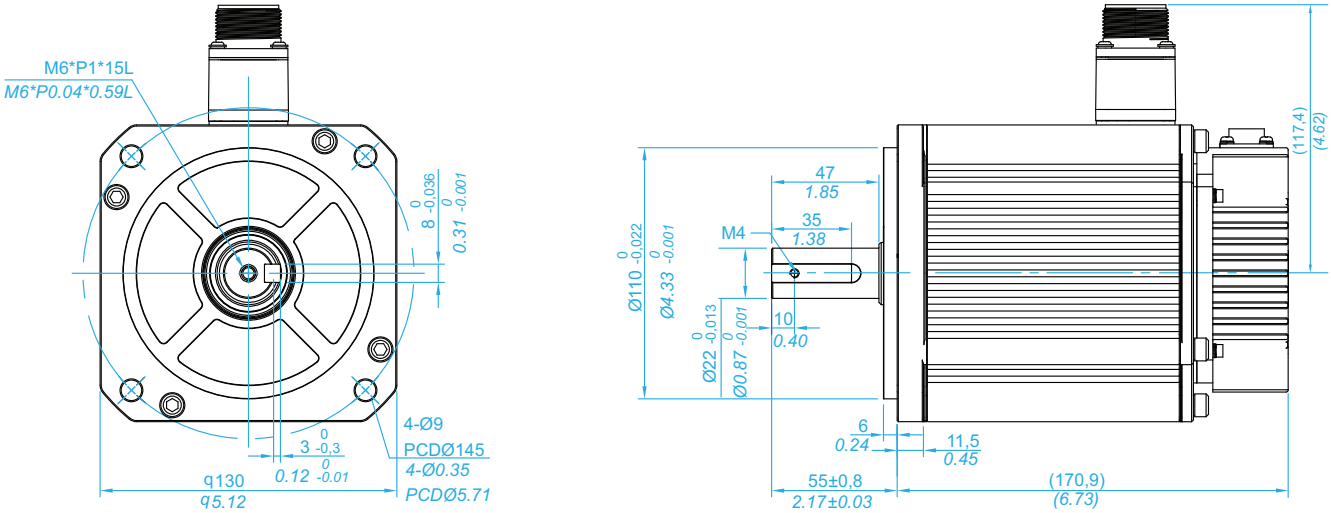

BCH18MM15232F6C

mm / in.

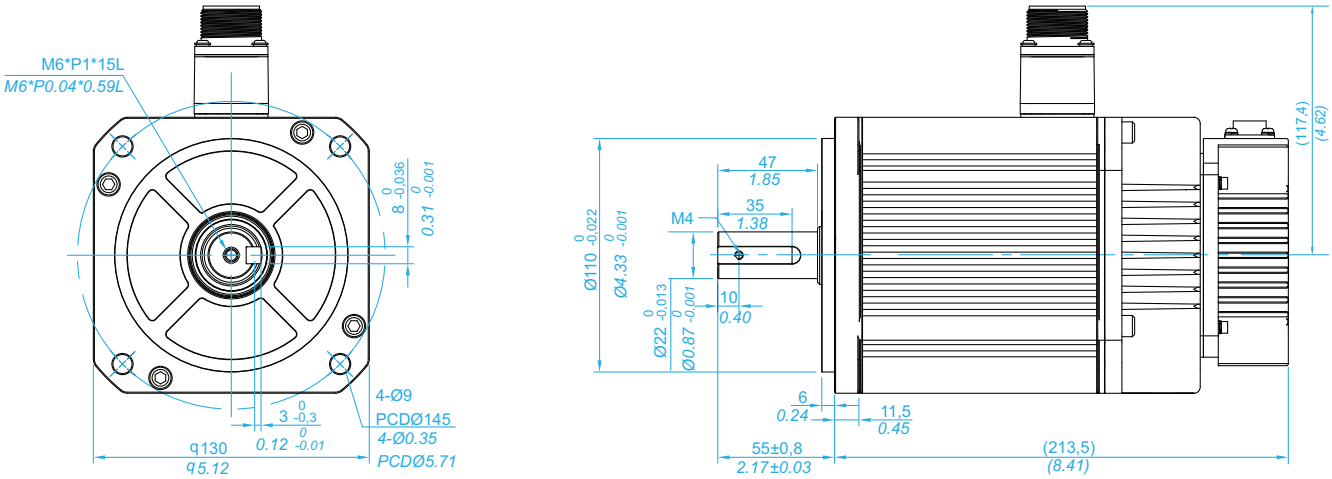

BCH18MM15

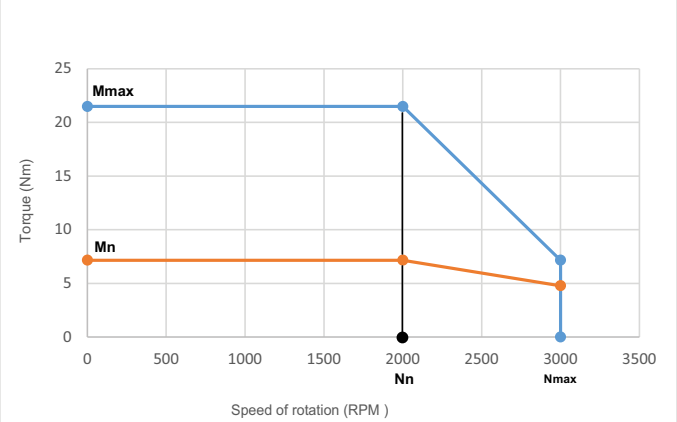

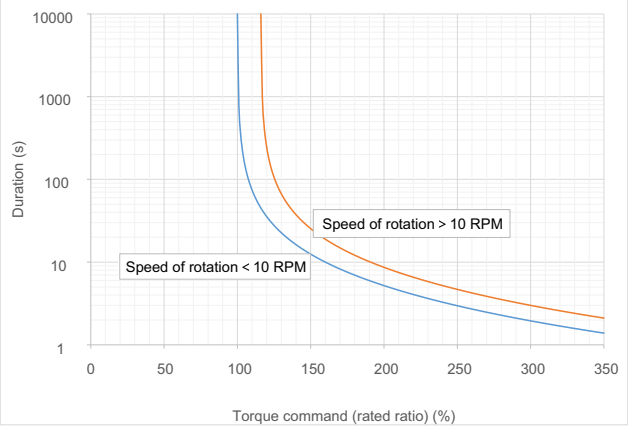

BCH18MM18132A6C

mm / in.

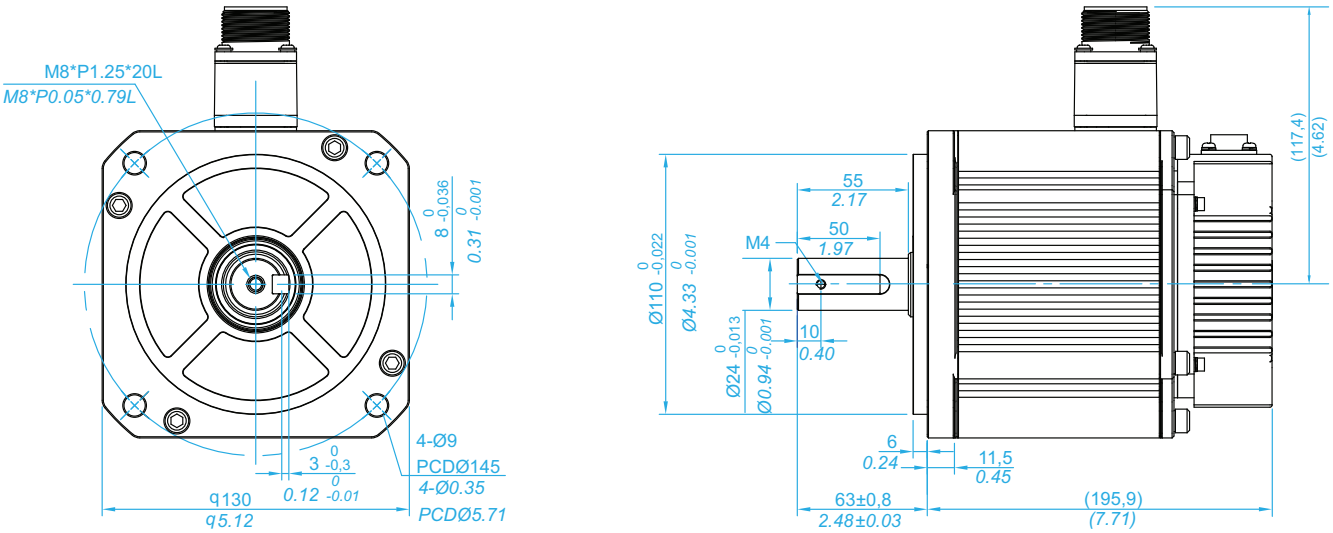

BCH18MM18132F6C

mm / in.

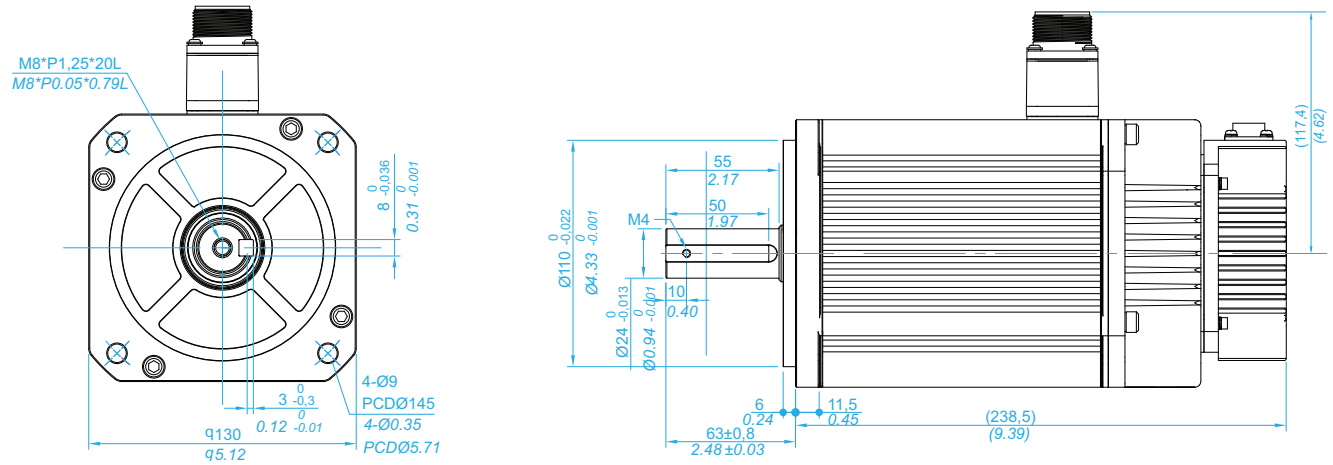

BCH18MM18

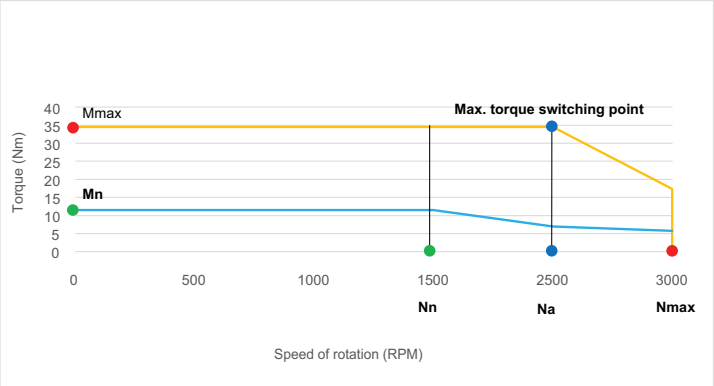

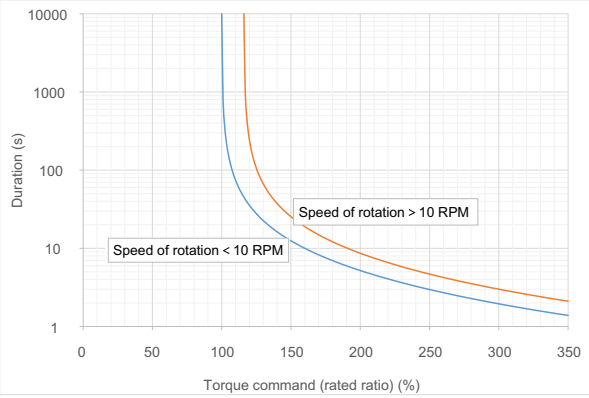

BCH18MM20232A6C

mm
in.

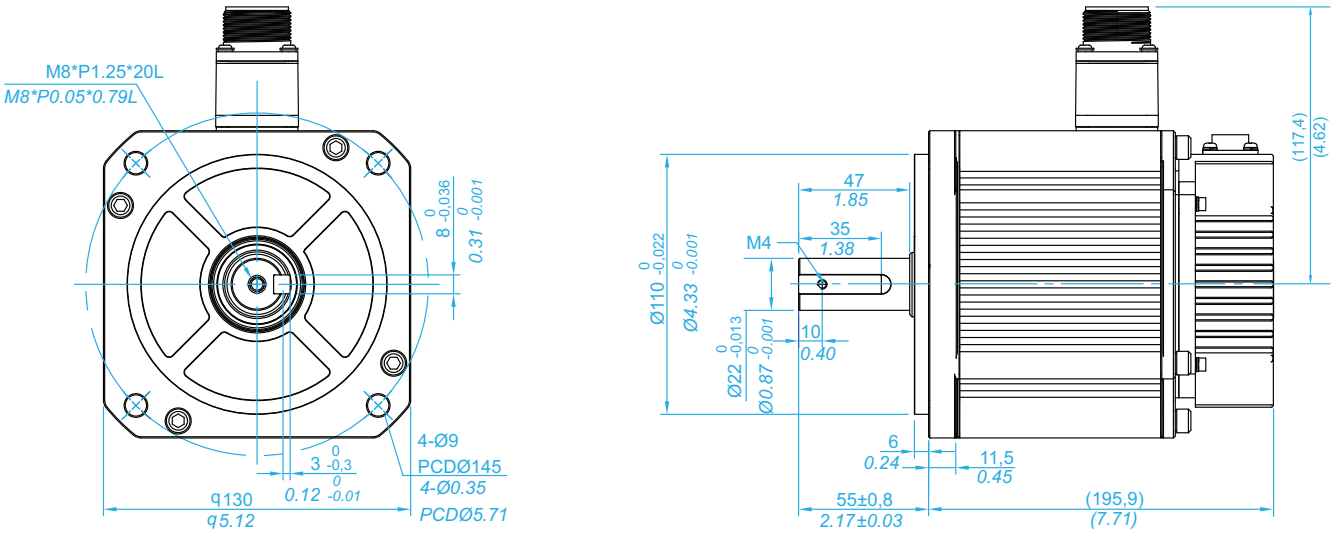

BCH18MM20232F6C

mm
in.

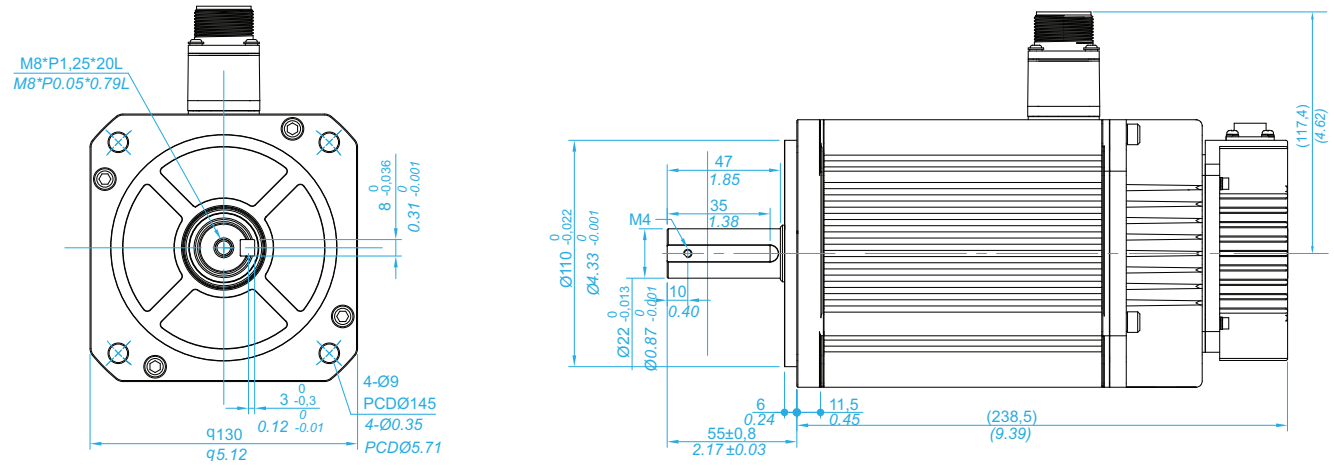

BCH18MM20

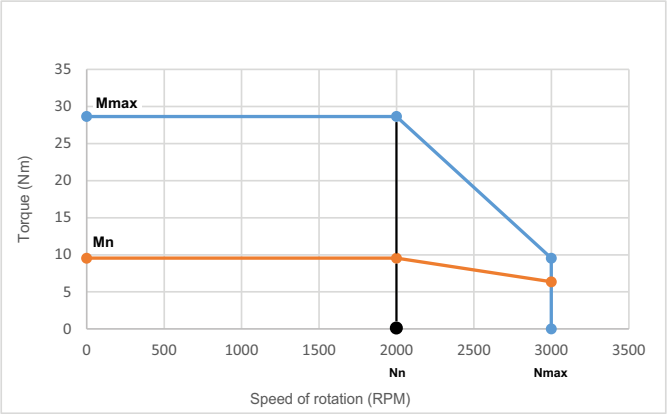

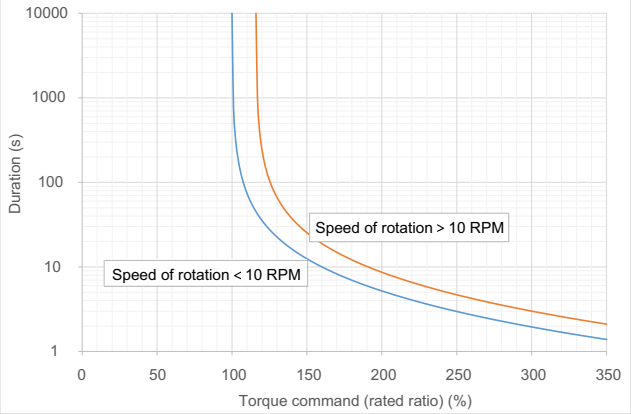

BCH18MR24132A6C

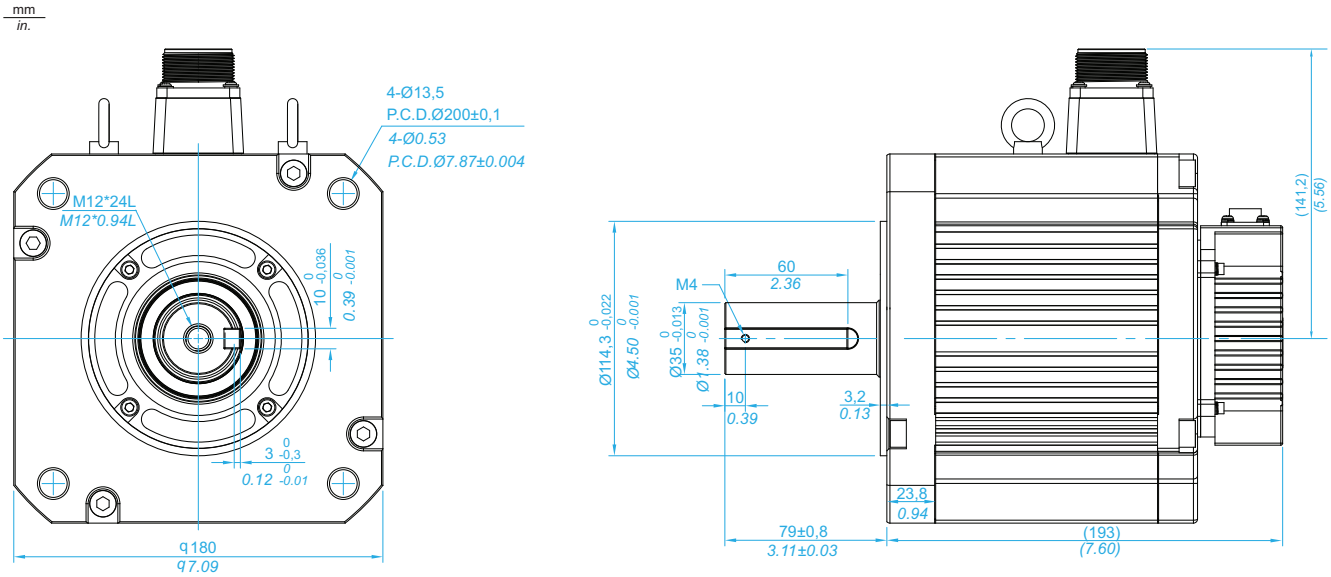

BCH18MR24132F6C

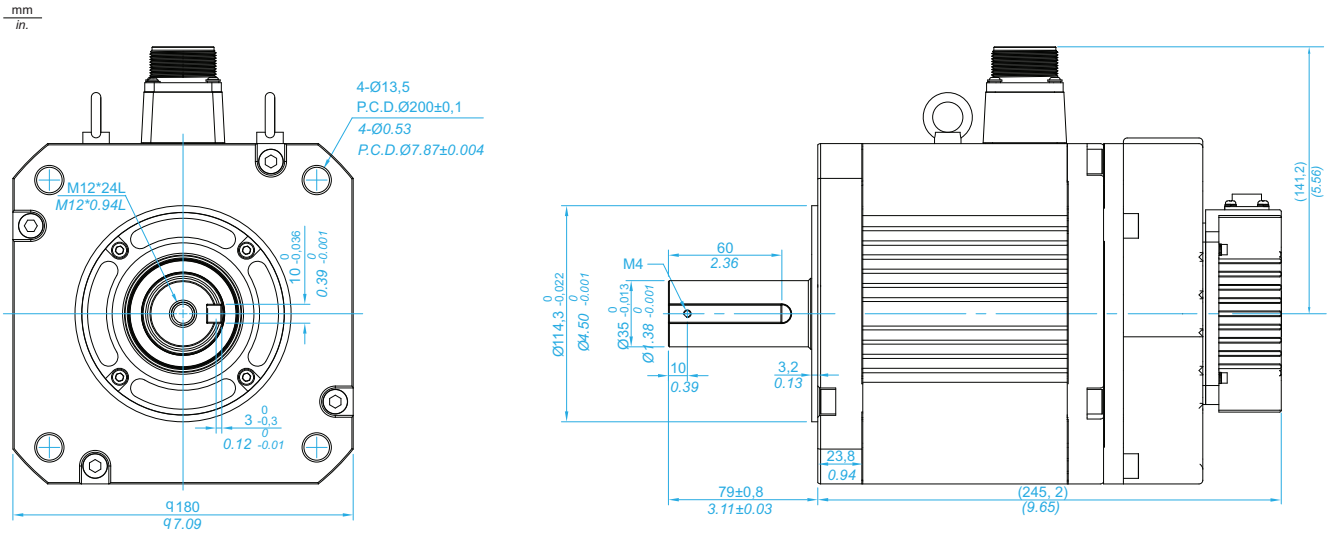

BCH18MR24

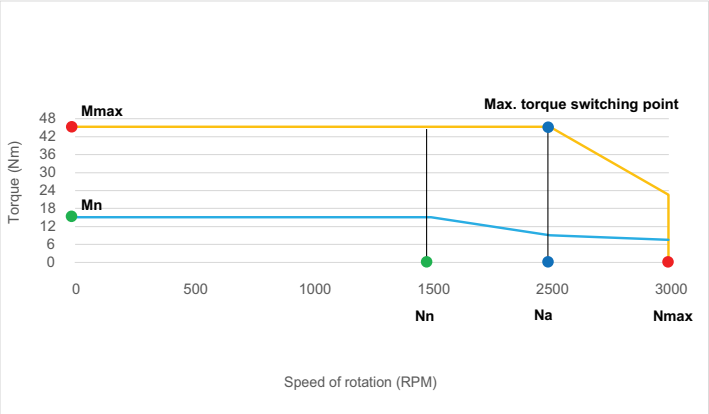

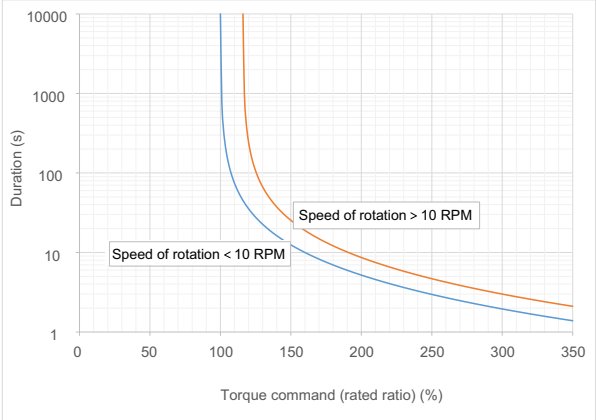

BCH18MR30132A6C

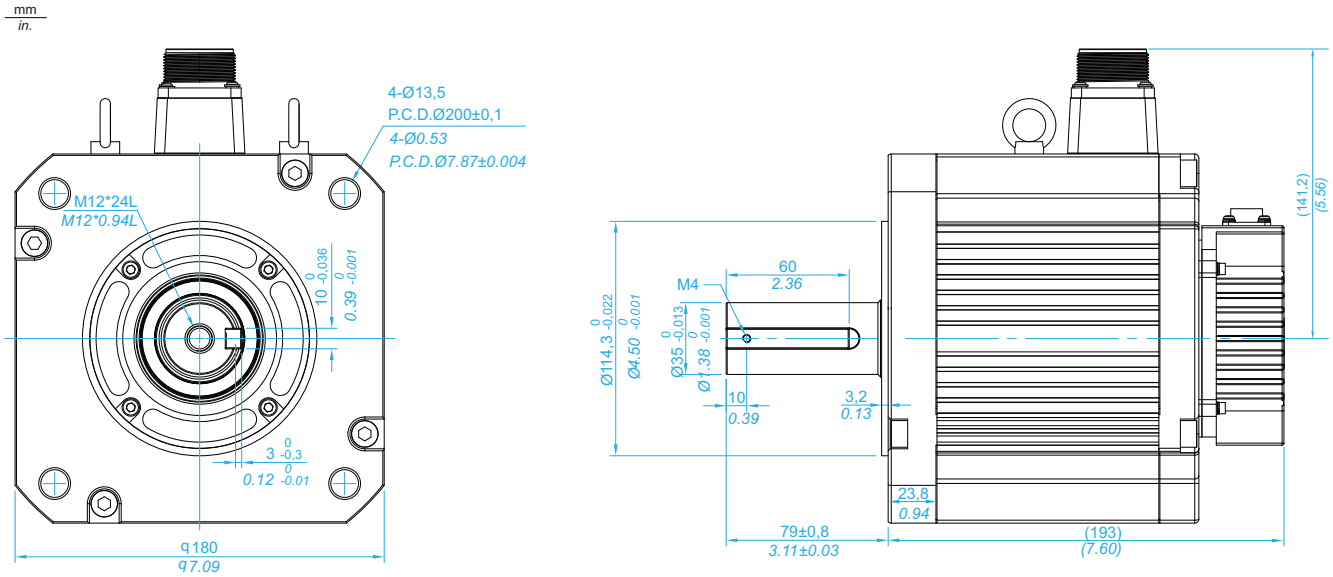

BCH18MR30132F6C

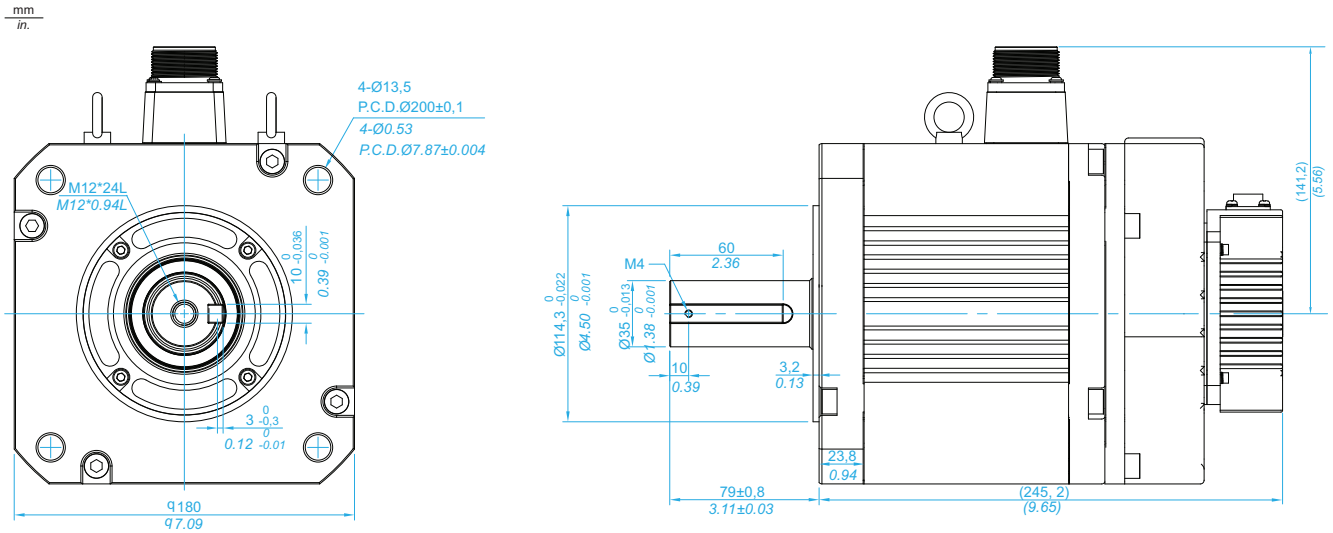

BCH18MR30

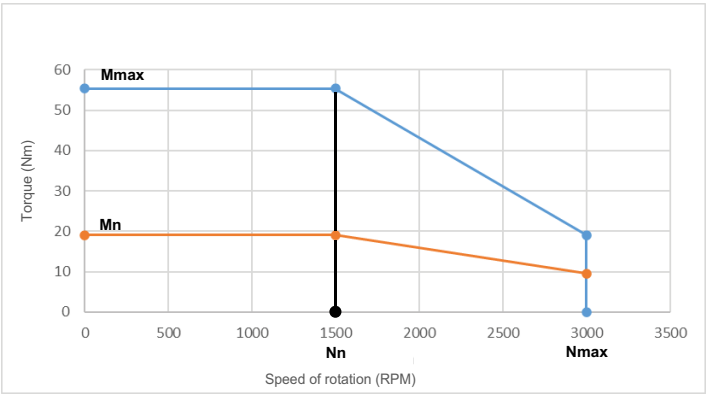

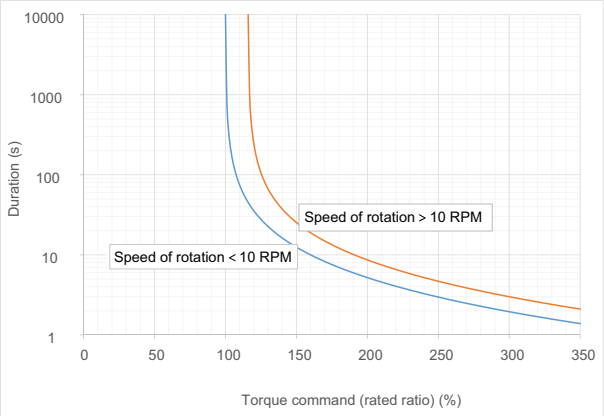

System Accessories

Example of standard connection between servo systems and peripheral equipment

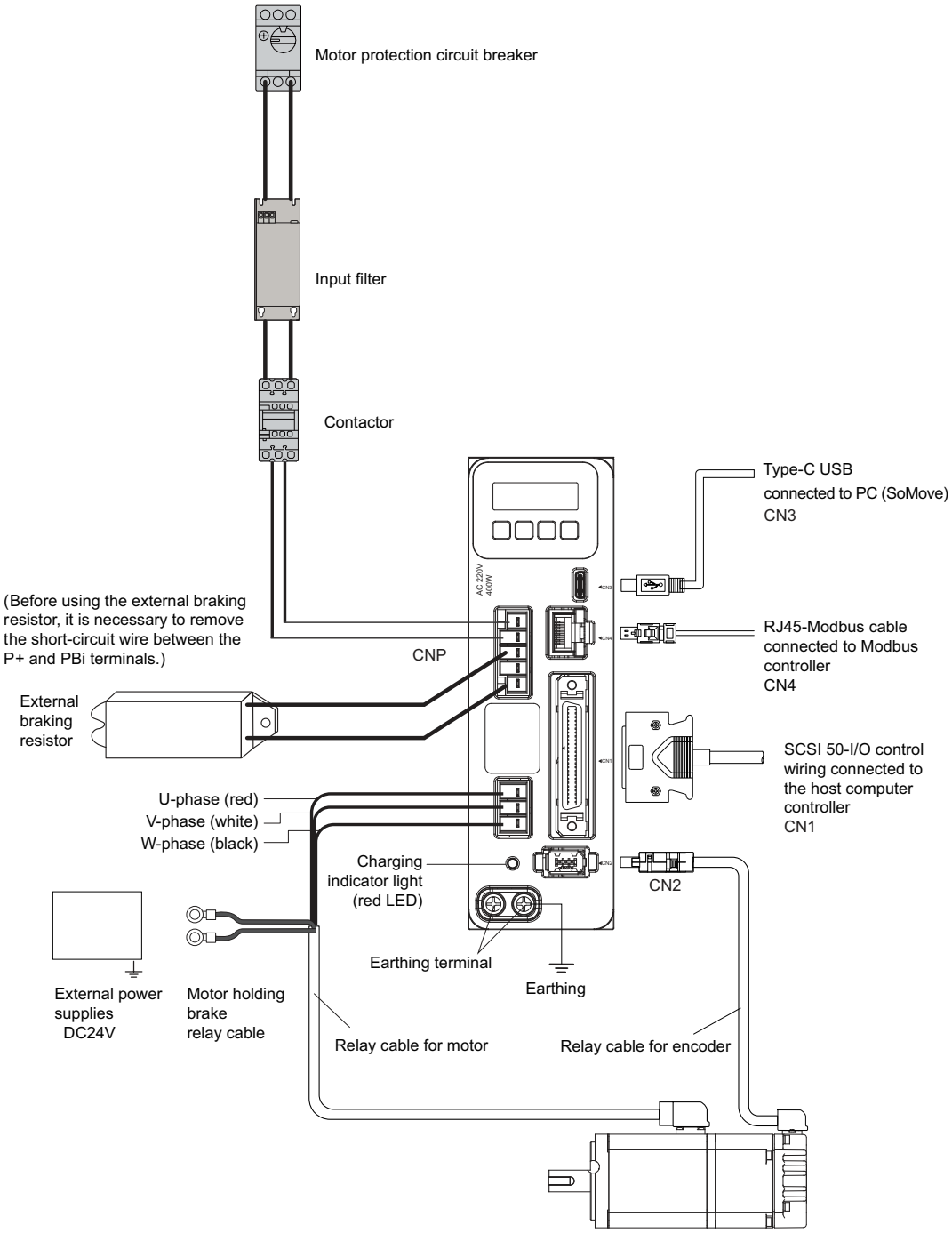

Designation	Description
CNP	Servo drive main circuit terminal
CN1	Servo drive signal interface
CN2	Servo drive encoder interface
CN3	Servo driver to host computer programming interface
CN4	Modbus interface

List of Accessories

Type	Type	Description
Plug	VW3M4B01	Plug kit for servo drive power input and servo motor output
	VW3M4B11	50-pin plug kit for CN1 control interfaces
	VW3M4B21	6-pin plug kit for CN2 encoder interfaces
	VW3M5B10	Power plug kit for 40 mm (1.57 in) flange motors, plastic connector
	VW3M5B11	Power plug kit for 60-80 mm (2.36-3.15 in) flange motors, downstream forward, plastic connector
	VW3M5B12	Power plug kit for 60-80 mm (2.36-3.15 in) flange motors, downstream backward, plastic connector
	VW3M5B21	Power plug kit for 100-130 mm (3.94-5.12 in) flange motors, military connector
	VW3M5B22	Power plug kit for 180 mm (7.09 in) flange motors, military connector
	VW3M8B11	plug kit for 40-80 mm (1.57-3.15 in) flange motors, plastic connector encoder
	VW3M8B21	Plug kit for 100-180 mm (3.94-7.09 in) flange motors, military connector encoder

Type	Type	Description
Motor power cables	VWM5B01R**	Plastic connector motor power cables for 40 mm (1.57 in) flange motors, downstream forward, plastic connector 4G0.34 mm^2, optional length
	VWM5B02R**	Plastic connector motor power cables for 40 mm (1.57 in) flange motors, downstream forward, plastic connector With holding brake, 6G0.34 mm^2, optional length
	VWM5B03R**	Plastic connector motor power cables for 40 mm (1.57 in) flange motors, downstream backward 4G0.34 mm^2, optional length
	VWM5B04R**	Plastic connector motor power cables for 40 mm (1.57 in) flange motors, downstream backward With holding brake, 6G0.34 mm^2, optional length
	VWM5B11R**	Plastic connector motor power cables for 60-80 mm (2.36-3.15 in) flange motors, downstream forward 4G0.75 mm^2, optional length
	VWM5B12R**	Plastic connector motor power cables for 60-80 mm (2.36-3.15 in) flange motors, downstream forward With holding brake control, 4G0.75 mm^2+ 2*0.2 mm^2, optional length
	VWM5B13R**	Plastic connector motor power cables for 60-80 mm (2.36-3.15 in) flange motors, downstream backward 4G0.75 mm^2, optional length
	VWM5B14R**	Plastic connector motor power cables for 60-80 mm (2.36-3.15 in) flange motors, downstream backward With holding brake control, 4G0.75 mm^2+ 2*0.2 mm^2, optional length
	VWM5B21R**	Military connector motor power cables for 100-130 mm (3.94-5.12 in) flange motors 4G1.5 mm^2, optional length
	VWM5B22R**	Military connector motor power cables for 100-130 mm (3.94-5.12 in) flange motors With holding brake control, 4G1.5 mm^2+ 2*0.5 mm^2, optional length
	VWM5B31R**	Military connector motor power cables for 100-130 mm (3.94-5.12 in) flange motors 4G2.5 mm^2, optional length
	VWM5B32R**	Military connector motor power cables for 100-130 mm (3.94-5.12 in) flange motors With holding brake control, 4G2.5 mm^2+ 2*0.5 mm^2, optional length
	VWM5B41R**	Military connector motor power cables for 180 mm (7.09 in) flange motors 4G2.5 mm^2, optional length
	VWM5B42R**	Military connector motor power cables for 180 mm (7.09 in) flange motors With holding brake control, 4G2.5 mm^2+ 2*0.5 mm^2, optional length

Type	Type	Description
Motor encoder cables	VW3M8B11R**	Plastic connector motor encoder cables, downstream forward 2*0.5 mm^2+ 2*0.25mm^2, optional length
	VW3M8B13R**	Plastic connector motor encoder cables, downstream backward 2*0.5 mm^2+ 2*0.25mm^2, optional length
	VW3M8B21R**	Military connector motor encoder cables 2*0.5 mm^2+ 2*0.25mm^2, optional length
External braking resistor	VW3A760*R**	External braking resistors with connecting cables, with optional cable length, resistor power and ohmic values
Input filter	VW3A44**	Servo drive external input filter, with optional current
Motor protection circuit breaker	GV2P**	Motor protection circuit breakers, with optional setting current
Contactor	LC1***	Mains supply contactor, with optional control voltage and control

Plug

Description	Plug kit for servo drive power input and servo motor output		
Type	VW3M4B01	Related model	LXM18P*U01...15M2X

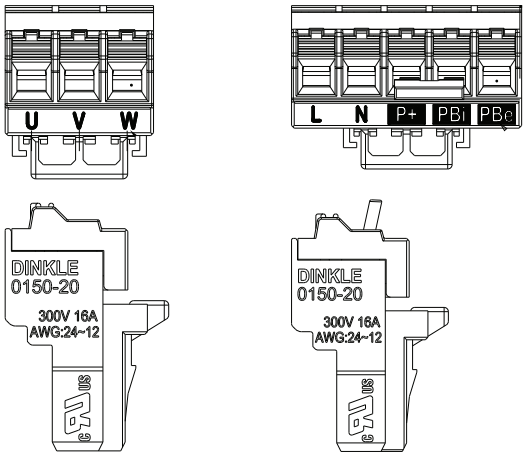

Constituent parts				
Description	Type	Quantity	Manufacturer	Remark
Plug kit	0150-20-S1512903	1	Dinkle	For power input and motor power output
	0150-20-S1513005	1	Dinkle	

Description	Plug kit for servo drive CN2 control interfaces		
Type	VW3M4B11	Related model	LXM18P*U01..15M2X LXM18P*U20..30M3X

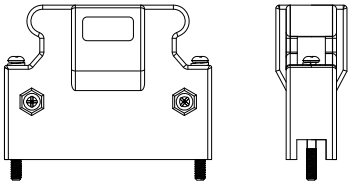

Constituent parts				
Description	Type	Quantity	Manufacturer	Remark
Plug kit	SC-50-3	1	SUNCHU	For CN1 (SCSI-50)

Description	Plug kit for servo drive CN2 control interfaces		
Type	VW3M4B21	Related model	LXM18P*U01..15M2X LXM18P*U20..30M3X

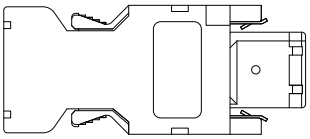

Constituent parts				
Description	Type	Quantity	Manufacturer	Remark
Plug kit	SC-06B-2N00-702	1	SUNCHU	For CN2 (IEEE-1394, 6-pin)

Description	Power plug kit for 40 mm (1.57 in) flange motors, plastic connector		
Type	VW3M5B10	Related model	BCH18*B*****

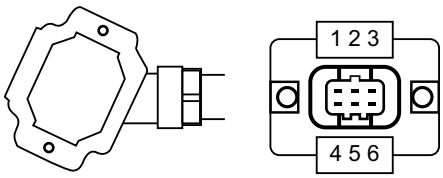

Constituent parts

Description	Type	Quantity	Manufacturer	Remark
Plug kit	SC-MC6S-AB20-20-01	1	SUNCHU	–

Description	Power plug kit for 60-80 mm (2.36-3.15 in) flange motors, downstream forward, plastic connector		
Type	VW3M5B11	Related model	BCH18*D/F*****

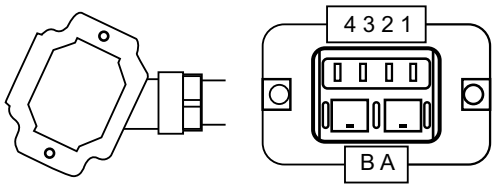

Constituent parts

Description	Type	Quantity	Manufacturer	Remark
Plug kit	SC-MC6S-AE20-00-01	1	SUNCHU	–

Description	Power plug kit for 60-80 mm (2.36-3.15 in) flange motors, downstream backward, plastic connector		
Type	VW3M5B12	Related model	BCH18*D/F*****

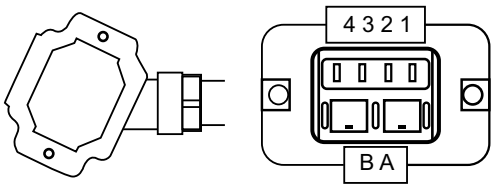

Constituent parts

Description	Type	Quantity	Manufacturer	Remark
Plug kit	SC-MC6S-AE20-00-02	1	SUNCHU	–

Description	Power plug kit for 100-130 mm (3.94-5.12 in) flange motors, military connector		
Type	VW3M5B21	Related model	BCH18*H/M*****

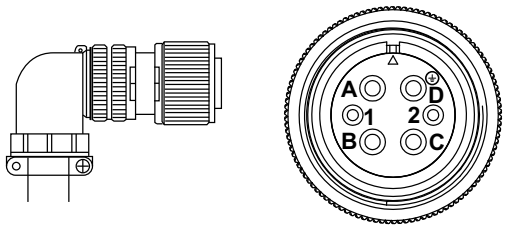

Constituent parts

Description	Type	Quantity	Manufacturer	Remark
Plug kit	CMS3108A18-A6SFI	1	SUNCHU	–

Description	Power plug kit for 180 mm (7.09 in) flange motors, military connector		
Type	VW3M5B22	Related model	BCH18*R*****

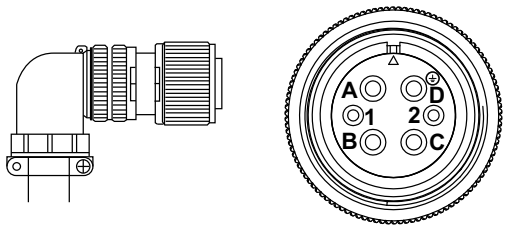

Constituent parts

Description	Type	Quantity	Manufacturer	Remark
Plug kit	CMS3108A22-A6SFI	1	SUNCHU	–

Description	Plug kit for 40-80 mm (1.57-3.15 in) flange motors, plastic connector encoder		
Type	VW3M8B11	Related model	BCH18*B/D/F*****

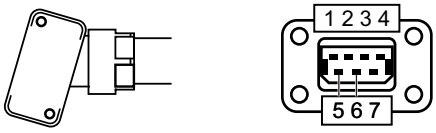

Constituent parts

Description	Type	Quantity	Manufacturer	Remark
Plug kit	SC-MC7S-AC20-00-01	1	SUNCHU	–

Description	Plug kit for 100-180 mm (3.94-7.09 in) flange motors, military connector encoder		
Type	VW3M8B21	Related model	BCH18*H/M/R*****

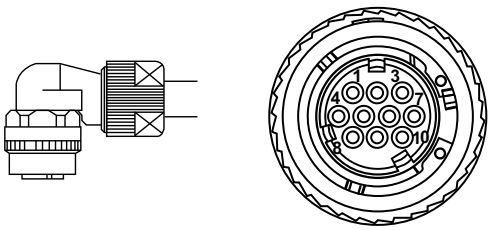

Constituent parts

Description	Type	Quantity	Manufacturer	Remark
Plug kit	SC-CMV1-AP10CT	1	SUNCHU	–

Motor Power Cables/Holding Brake Control Cables

Description	Plastic connector motor power cables for 40 mm (1.57 in) flange motors, downstream forward, plastic connector		
Type	VW3M5B01R**	Related model	BCH18*B*****

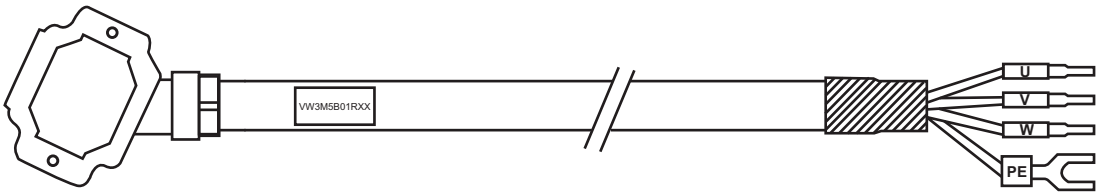

L (m/ft)	Type
1.5 / 4.92	VW3M5B01RA5
3 / 9.84	VW3M5B01R03
5 / 16.40	VW3M5B01R05
10 / 32.81	VW3M5B01R10
15 / 49.21	VW3M5B01R15
20 / 65.62	VW3M5B01R20
25 / 82.02	VW3M5B01R25

Constituent parts

Description	Type	Quantity	Manufacturer
Plug kit	SC-MC6S-AB20-20	1	SUNCHU
Cables	4G*0.34 mm²	–	–
Pin terminals	E0508	3	Phoenix Contact
Spade terminals	SV1.25-4S	1	Phoenix Contact

Description	Plastic connector motor power cables for 40 mm (1.57 in) flange motors, downstream forward, plastic connector, with holding brake control		
Type	VW3M5B02R**	Related model	BCH18*B*****

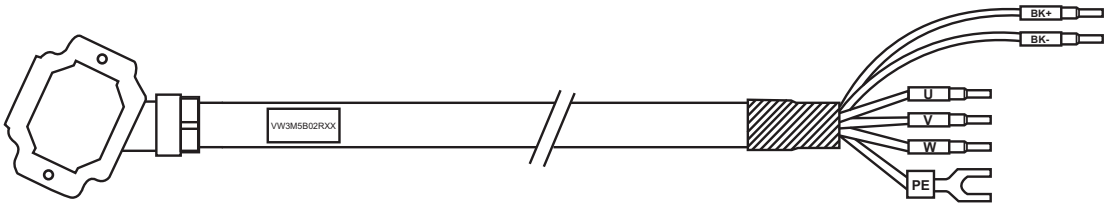

L (m/ft)	Type
1.5 / 4.92	VW3M5B02RA5
3 / 9.84	VW3M5B02R03
5 / 16.40	VW3M5B02R05
10 / 32.80	VW3M5B02R10
15 / 49.21	VW3M5B02R15
20 / 65.62	VW3M5B02R20
25 / 82.02	VW3M5B02R25

Constituent parts

Description	Type	Quantity	Manufacturer
Plug kit	SC-MC6S-AB20-20	1	SUNCHU
Cables	6G*0.34 mm²	–	–
Pin terminals	E0508	5	Phoenix Contact
Spade terminals	SV1.25-4S	1	Phoenix Contact

Description	Plastic connector motor power cables for 40 mm (1.57 in) flange motors, downstream backward		
Type	VW3M5B03R**	Related model	BCH18*B*****

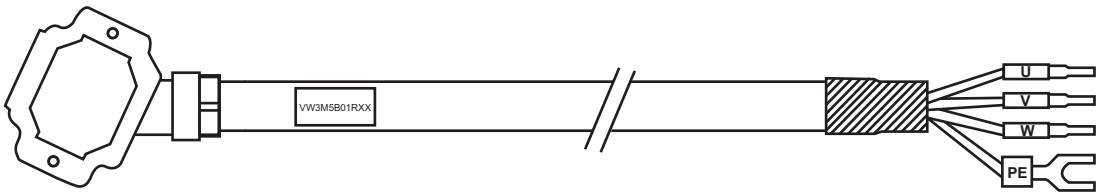

L (m/ft)	Type
1.5 / 4.92	VW3M5B03RA5
3 / 9.84	VW3M5B03R03
5 / 16.40	VW3M5B03R05
10 / 32.80	VW3M5B03R10
15 / 49.21	VW3M5B03R15
20 / 65.62	VW3M5B03R20
25 / 82.02	VW3M5B03R25

Constituent parts

Description	Type	Quantity	Manufacturer
Plug kit	SC-MC6S-AB20-20	1	SUNCHU
Cables	4G*0.34 mm²	–	–
Pin terminals	E0508	3	Phoenix Contact
Spade terminals	SV1.25-4S	1	Phoenix Contact

Description	Plastic connector motor power cables for 40 mm (1.57 in) flange motors, downstream backward, plastic connector, with holding brake control		
Type	VW3M5B04R**	Related model	BCH18*B*****

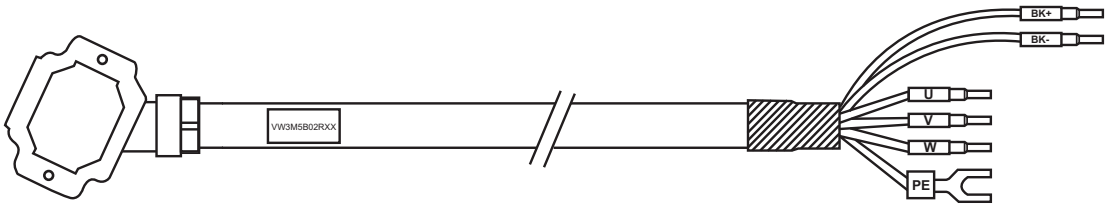

L (m/ft)	Type
1.5 / 4.92	VW3M5B04RA5
3 / 9.84	VW3M5B04R03
5 / 16.40	VW3M5B04R05
10 / 32.80	VW3M5B04R10
15 / 49.21	VW3M5B04R15
20 / 65.62	VW3M5B04R20
25 / 82.02	VW3M5B04R25

Constituent parts

Description	Type	Quantity	Manufacturer
Plug kit	SC-MC6S-AB20-20	1	SUNCHU
Cables	6G*0.34 mm²	–	–
Pin terminals	E0508	5	Phoenix Contact
Spade terminals	SV1.25-4S	1	Phoenix Contact

Description	Plastic connector motor power cables for 60…80 mm (2.36…3.15 in) flange motors, downstream forward		
Type	VW3M5B11R**	Related model	BCH18*D/F*****

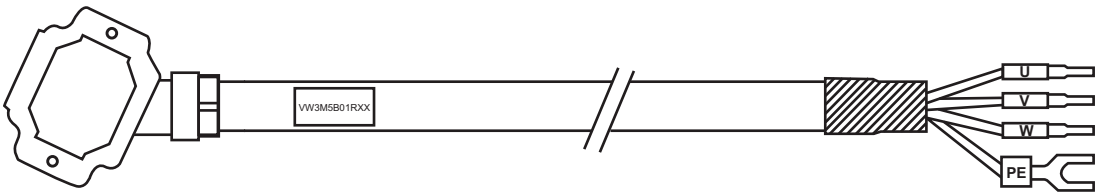

L (m/ft)	Type
1.5 / 4.92	VW3M5B11RA5
3 / 9.84	VW3M5B11R03
5 / 16.40	VW3M5B11R05
10 / 32.80	VW3M5B11R10
15 / 49.21	VW3M5B11R15
20 / 65.62	VW3M5B11R20
25 / 82.02	VW3M5B11R25

Constituent parts

Description	Type	Quantity	Manufacturer
Plug kit	SC-MC6S-AE20-00	1	SUNCHU
Cables	4G*0.75 mm²	–	–
Pin terminals	E7508	3	Phoenix Contact
Spade terminals	SV1.25-4S	1	

Description	Plastic connector motor power cables for 60…80 mm (2.36…3.15 in) flange motors, downstream forward, plastic connector, with holding brake control		
Type	VW3M5B12R**	Related model	BCH18*D/F*****

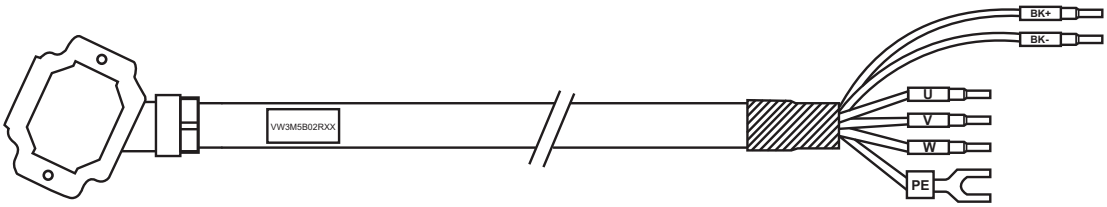

L (m/ft)	Type
1.5 / 4.92	VW3M5B12RA5
3 / 9.84	VW3M5B12R03
5 / 16.40	VW3M5B12R05
10 / 32.80	VW3M5B12R10
15 / 49.21	VW3M5B12R15
20 / 65.62	VW3M5B12R20
25 / 82.02	VW3M5B12R25

Constituent parts

Description	Type	Quantity	Manufacturer
Plug kit	SC-MC6S-AE20-00	1	SUNCHU
Cables	4G*0.75 mm²+ 2*0.2 mm²	–	–
Pin terminals	E7508	3	Phoenix Contact
Pin terminals	EVN0308	2	
Spade terminals	SV1.25-4S	1	

Description	Plastic connector motor power cables for 60…80 mm (2.36…3.15 in) flange motors, downstream backward		
Type	VW3M5B13R**	Related model	BCH18*D/F*****

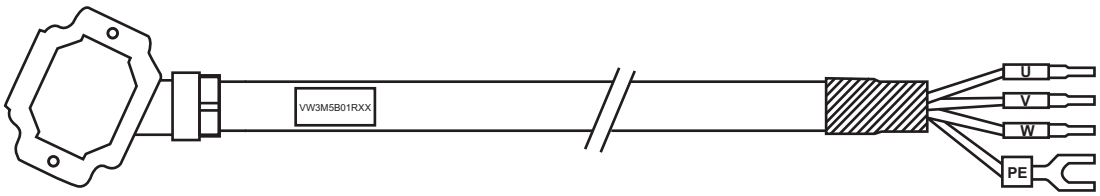

L (m/ft)	Type
1.5 / 4.92	VW3M5B13RA5
3 / 9.84	VW3M5B13R03
5 / 16.40	VW3M5B13R05
10 / 32.80	VW3M5B13R10
15 / 49.21	VW3M5B13R15
20 / 65.62	VW3M5B13R20
25 / 82.02	VW3M5B13R25

Constituent parts

Description	Type	Quantity	Manufacturer
Plug kit	SC-MC6S-AE20-00	1	SUNCHU
Cables	4G*0.75 mm²	–	–
Pin terminals	E7508	3	Phoenix Contac
Spade terminals	SV1.25-4S	1	

Description	Plastic connector motor power cables for 60…80 mm (2.36…3.15 in) flange motors, downstream backward, plastic connector, with holding brake control		
Type	VW3M5B14R**	Related model	BCH18*D/F*****

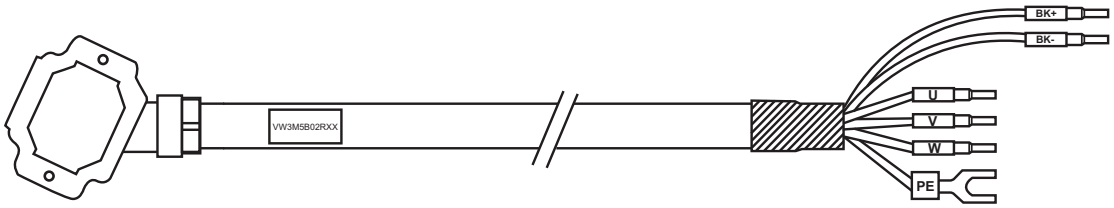

L (m/ft)	Type
1.5 / 4.92	VW3M5B14RA5
3 / 9.84	VW3M5B14R03
5 / 16.40	VW3M5B14R05
10 / 32.80	VW3M5B14R10
15 / 49.21	VW3M5B14R15
20 / 65.62	VW3M5B14R20
25 / 82.02	VW3M5B14R25

Constituent parts

Description	Type	Quanti-ty	Manufacturer
Plug kit	SC-MC6S-AE20-00	1	SUNCHU
Cables	4G*0.75 mm²+ 2*0.2 mm²	–	–
Pin terminals	E7508	3	Phoenix Contact
Pin terminals	EVN0308	2	
Spade terminals	SV1.25-4S	1	

Description	Military connector motor power cables for 100-130 mm (3.94-5.12 in) flange motors		
Type	VW3M5B21R**	Related model	BCH18*H/M*****

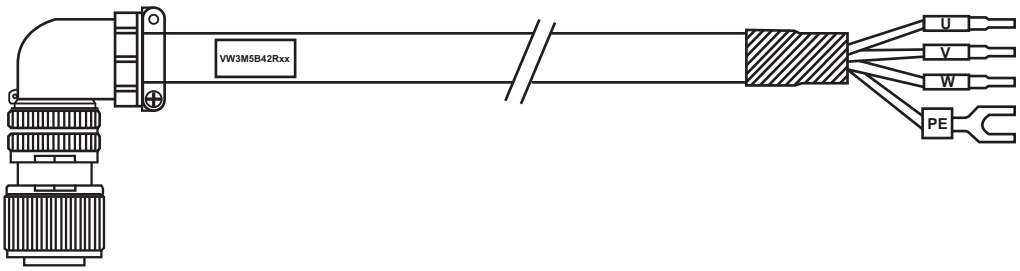

L (m/ft)	Type
1.5 / 4.92	VW3M5B21RA5
3 / 9.84	VW3M5B21R03
5 / 16.40	VW3M5B21R05
10 / 32.80	VW3M5B21R10
15 / 49.21	VW3M5B21R15
20 / 65.62	VW3M5B21R20
25 / 82.02	VW3M5B21R25

Constituent parts

Description	Type	Quantity	Manufacturer
Plug kit	CMS3108A18–A6SFI	1	SUNCHU
Cables	4G*1.5 mm²	–	–
Pin terminals	E1512	3	Phoenix Contact
Spade terminals	SV2-4S	1	

Description	Motor power cables for 100-130 mm (3.94-5.12 in) flange motors, military connector, with holding brake control		
Type	VW3M5B22R**	Related model	BCH18*H/M*****

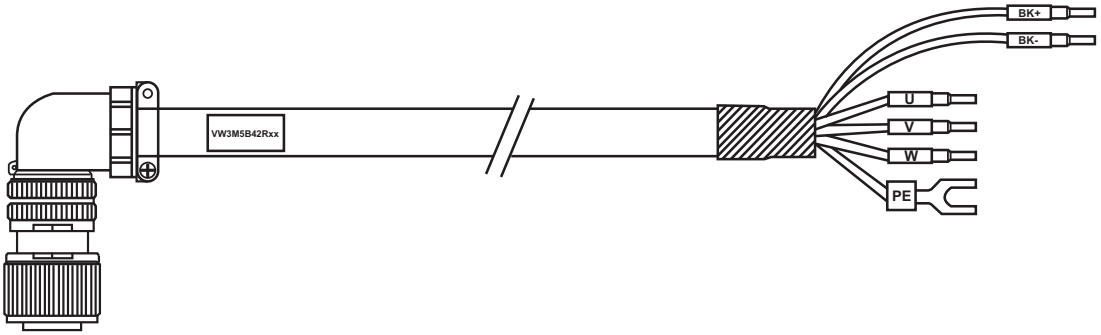

L (m/ft)	Type
1.5 / 4.92	VW3M5B22RA5
3 / 9.84	VW3M5B22R03
5 / 16.40	VW3M5B22R05
10 / 32.80	VW3M5B22R10
15 / 49.21	VW3M5B22R15
20 / 65.62	VW3M5B22R20
25 / 82.02	VW3M5B22R25

Constituent parts

Description	Type	Quanti-ty	Manufacturer
Plug kit	CMS3108A18–A6SFI	1	SUNCHU
Cables	4G*1.5 mm²+ 2*0.5 mm²	–	–
Pin terminals	E1512	3	Phoenix Contact
Pin terminals	E0508	2	
Spade terminals	SV2-4S	1	

Description	Military connector motor power cables for 100-130 mm (3.94-5.12 in) flange motors		
Type	VW3M5B31R**	Related model	BCH18*H/M*****

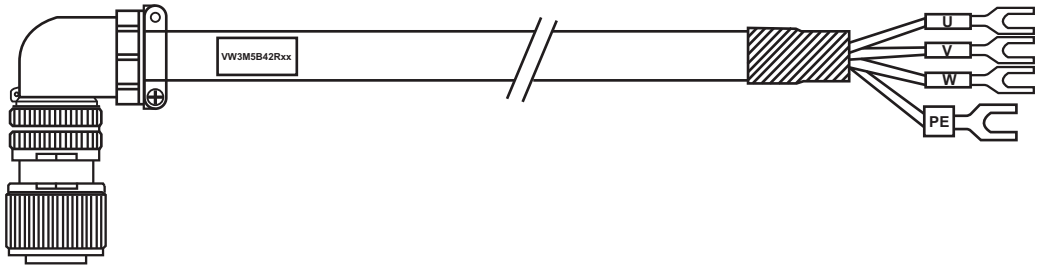

L (m/ft)	Type
1.5 / 4.92	VW3M5B31RA5
3 / 9.84	VW3M5B31R03
5 / 16.40	VW3M5B31R05
10 / 32.80	VW3M5B31R10
15 / 49.21	VW3M5B31R15
20 / 65.62	VW3M5B31R20
25 / 82.02	VW3M5B31R25

Constituent parts

Description	Type	Quantity	Manufacturer
Plug kit	CMS3108A18–A6SFI	1	SUNCHU
Cables	4G*2.5 mm²	–	–
Spade terminals	SV2-4S	4	Phoenix Contact

Description	Motor power cables for 100-130 mm (3.94-5.12 in) flange motors, military connector, with holding brake control		
Type	VW3M5B32R**	Related model	BCH18*H/M*****

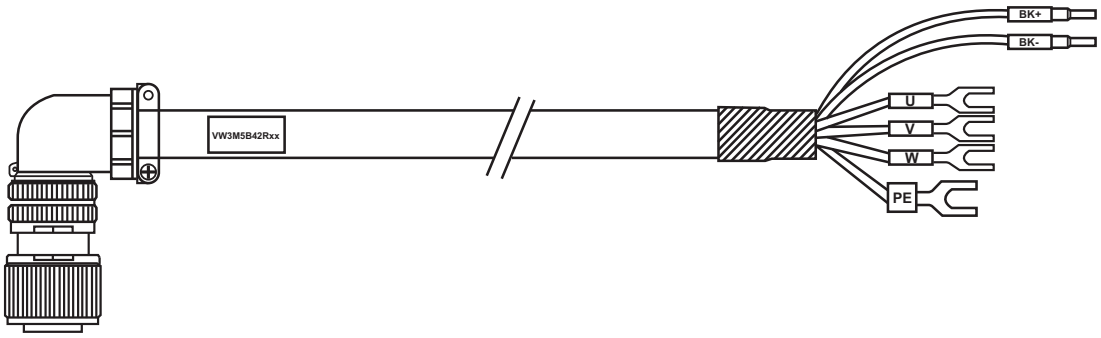

L (m/ft)	Type
1.5 / 4.92	VW3M5B32RA5
3 / 9.84	VW3M5B32R03
5 / 16.40	VW3M5B32R05
10 / 32.80	VW3M5B32R10
15 / 49.21	VW3M5B32R15
20 / 65.62	VW3M5B32R20
25 / 82.02	VW3M5B32R25

Constituent parts

Description	Type	Quantity	Manufacturer
Plug kit	CMS3108A18–A6SFI	1	SUNCHU
Cables	4G*2.5 mm²+ 2*0.5 mm²	–	–
Pin terminals	E0508	2	Phoenix Contact
Spade terminals	SV2-4S	4	

Description	Military connector motor power cables for 180 mm (7.09 in) flange motors		
Type	VW3M5B41R**	Related model	BCH18*R*****

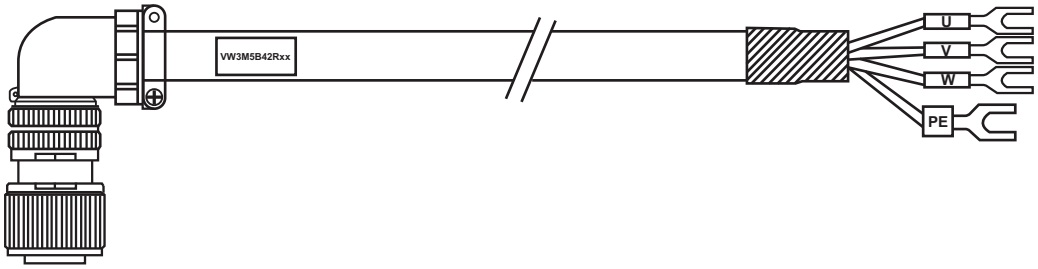

L (m/ft)	Type
1.5 / 4.92	VW3M5B41RA5
3 / 9.84	VW3M5B41R03
5 / 16.40	VW3M5B41R05
10 / 32.80	VW3M5B41R10
15 / 49.21	VW3M5B41R15
20 / 65.62	VW3M5B41R20
25 / 82.02	VW3M5B41R25

Constituent parts

Description	Type	Quantity	Manufacturer
Plug kit	CMS3108A22-A6SFI	1	SUNCHU
Cables	4G*2.5 mm²	–	–
Spade terminals	SV2-4S	4	Phoenix Contact

Description	Military connector motor power cables for 180 mm (7.09 in) flange motors		
Type	VW3M5B42R**	Related model	BCH18*R*****

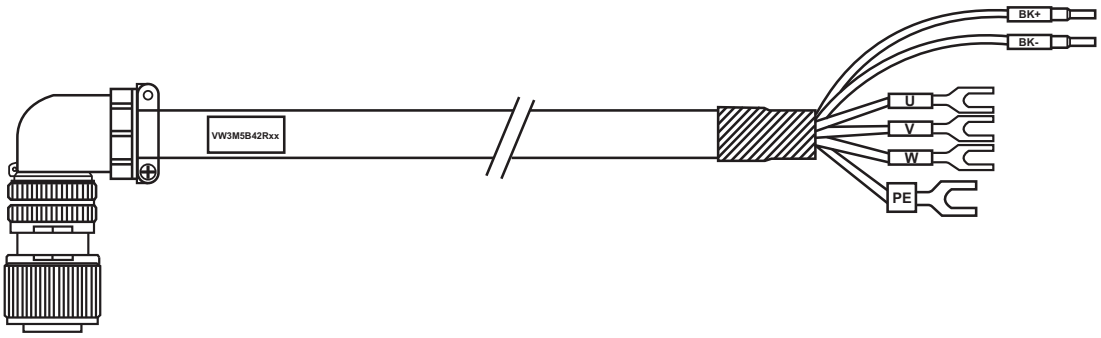

L (m/ft)	Type
1.5 / 4.92	VW3M5B42RA5
3 / 9.84	VW3M5B42R03
5 / 16.40	VW3M5B42R05
10 / 32.80	VW3M5B42R10
15 / 49.21	VW3M5B42R15
20 / 65.62	VW3M5B42R20
25 / 82.02	VW3M5B42R25

Constituent parts

Description	Type	Quanti-ty	Manufacturer
Plug kit	CMS3108A22-A6SFI	1	SUNCHU
Cables	4G*2.5 mm²+ 2*0.5 mm²	–	–
Pin terminals	E0508	2	Phoenix Contact
Spade terminals	SV2-4S	4	

Motor encoder cables

Description	Plastic connector motor encoder cables, downstream forward		
Type	VW3M8B11R**	Related model	BCH18*B/D/F*****

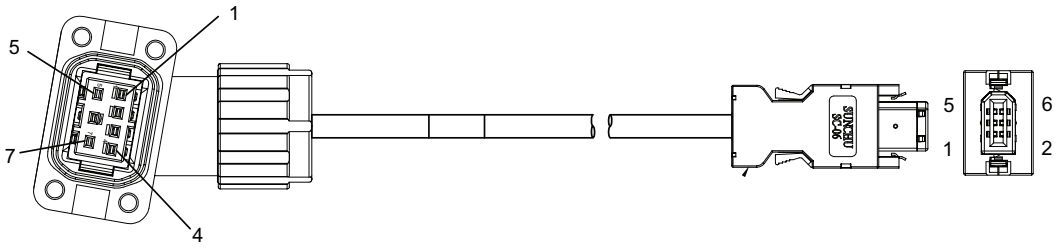

L (m/ft)	Type
1.5 / 4.92	VW3M8B11RA5
3 / 9.84	VW3M8B11R03
5 / 16.40	VW3M8B11R05
10 / 32.80	VW3M8B11R10
15 / 49.21	VW3M8B11R15
20 / 65.62	VW3M8B11R20
25 / 82.02	VW3M8B11R25

Constituent parts

Description	Type	Quantity	Manufacturer
plug kit (motor side)	SC-MC7S-AC20-00	1	SUNCHU
Cables	2*0.5 mm²+ 2*0.25 mm²	–	–
plug kit (drive side)	SC-06B-2N00-702	1	SUNCHU

Description	Plastic connector motor encoder cables, downstream backward		
Type	VW3M8B13R**	Related model	BCH18*B/D/F*****

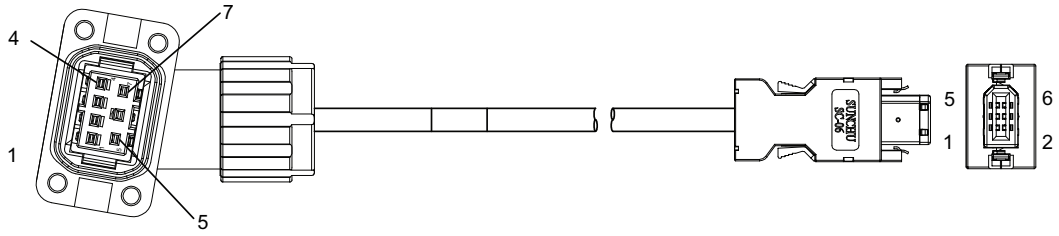

L (m/ft)	Type
1.5 / 4.92	VW3M8B13RA5
3 / 9.84	VW3M8B13R03
5 / 16.40	VW3M8B13R05
10 / 32.80	VW3M8B13R10
15 / 49.21	VW3M8B13R15
20 / 65.62	VW3M8B13R20
25 / 82.02	VW3M8B13R25

Constituent parts

Description	Type	Quantity	Manufacturer
plug kit (motor side)	SC-MC7S-AC20-00	1	SUNCHU
Cables	2*0.5 mm²+ 2*0.25 mm²	–	–
plug kit (drive side)	SC-06B-2N00-702	1	SUNCHU

Description	Military connector motor encoder cables		
Type	VW3M8B21R**	Related model	BCH18*H/M/R*****

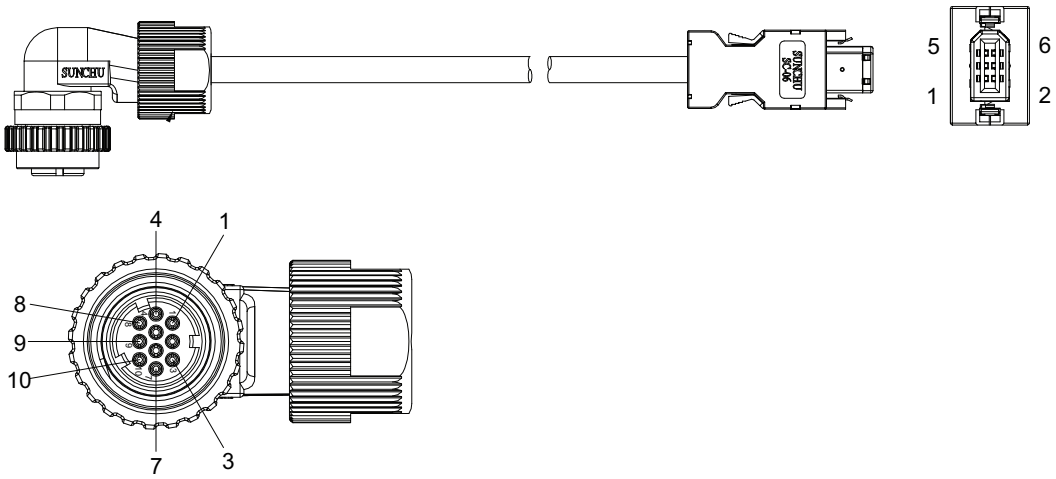

L (m/ft)	Type
1.5 / 4.92	VW3M8B21RA5
3 / 9.84	VW3M8B21R03
5 / 16.40	VW3M8B21R05
10 / 32.80	VW3M8B21R10
15 / 49.21	VW3M8B21R15
20 / 65.62	VW3M8B21R20
25 / 82.02	VW3M8B21R25

Constituent parts

Description	Type	Quantity	Manufacturer
Plug kit	SC-CMV1-AP10CT	1	SUNCHU
Cables	2*0.5 mm^2+ 2*0.25 mm^2	–	–
plug kit (drive side)	SC-06B-2N00-702	1	SUNCHU

External braking resistor

Description	External braking resistors with connecting cables		
Type	VW3A760*R**	Related model	LXM18P*U01...15M2X

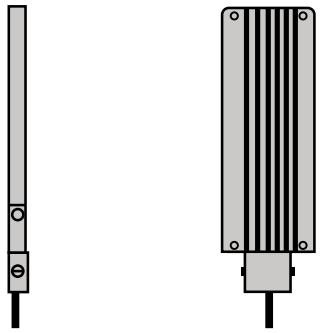

Constituent parts

Description	Type	Quantity	Manufacturer	Remark
External braking resistor	VW3A7605R07	1	Schneider Electric	72 Ohm, 100 W, 0.75 m (2.46 ft) cable
	VW3A7605R20	1		72 Ohm, 100 W, 2.0 m (6.56 ft) cable
	VW3A7605R30	1		72 Ohm, 100 W, 3.0 m (9.84 ft) cable
	VW3A7606R07	1		72 Ohm, 200 W, 0.75 m (2.46 ft) cable
	VW3A7606R20	1		72 Ohm, 200 W, 2.0 m (6.56 ft) cable
	VW3A7606R30	1		72 Ohm, 200 W, 3.0 m (9.84 ft) cable
	VW3A7607R07	1		72 Ohm, 400 W, 0.75 m (2.46 ft) cable
	VW3A7607R20	1		72 Ohm, 400 W, 2.0 m (6.56 ft) cable
	VW3A7607R30	1		72 Ohm, 400 W, 3.0 m (9.84 ft) cable
	VW3A7608R07	1		100 Ohm, 100 W, 0.75 m (2.46 ft) cable
	VW3A7608R20	1		100 Ohm, 100 W, 2.0 m (6.56 ft) cable
	VW3A7608R30	1		100 Ohm, 100 W, 3.0 m (9.84 ft) cable

Description	External braking resistors with connecting cables		
Type	VW3A760*R**	Related model	LXM18P*U07/10/15M2X

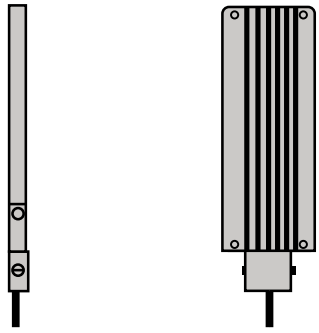

Constituent parts

Description	Type	Quantity	Manufacturer	Remark
External braking resistor	VW3A7602R07	1	Schneider Electric	27 Ohm, 100 W, 0.75 m (2.46 ft) cable
	VW3A7602R20	1		27 Ohm, 100 W, 2.0 m (6.56 ft) cable
	VW3A7603R07	1		27 Ohm, 200 W, 0.75 m (2.46 ft) cable
	VW3A7603R20	1		27 Ohm, 200 W, 2.0 m (6.56 ft) cable
	VW3A7603R30	1		27 Ohm, 200 W, 3.0 m (9.84 ft) cable
	VW3A7604R07	1		27 Ohm, 400 W, 0.75 m (2.46 ft) cable
	VW3A7604R20	1		27 Ohm, 400 W, 2.0 m (6.56 ft) cable
	VW3A7604R30	1		27 Ohm, 400 W, 3.0 m (9.84 ft) cable

Description	External braking resistors with connecting cables		
Type	VW3A7733	Related model	LXM18P*U20/30M3X
Specification	16 Ohm，960 W		

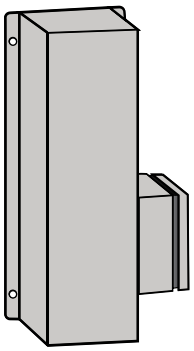

Input filter

Description	Servo drive external input filters
Type	VW3A442*

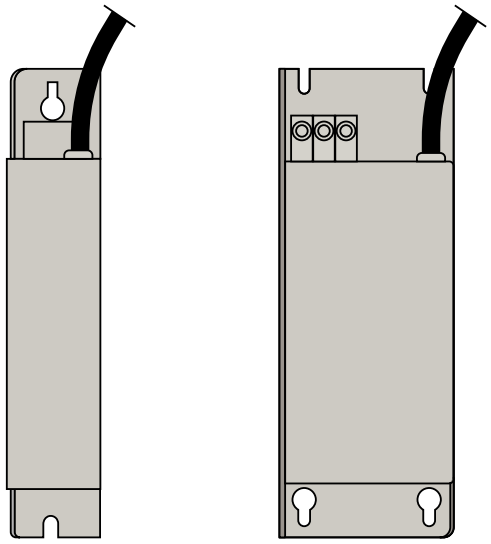

Constituent parts

Description	Type	Specifications	Manufacturer	Related model
Single-phase mains filters	VW3A4420	9 A, 115/230 Vac	Schneider Electric	LXM18P*U01/02/04M2X
	VW3A4421	16 A, 115/230 Vac		LXM18P*U07/10/15M2X
	VW3A4423	25 A, 230 Vac		LXM18P*U20/30M3X

Motor Protection Circuit Breakers

Branch Circuit Protection:

Suitable For Use On A Circuit Capable Of Delivering Not More Than 5kA rms Symmetrical Amperes, 240V Maximum.

Field Wiring Terminal Markings – Wiring terminals shall be marked to indicate the proper connections for power supply and load, or a wiring diagram coded to the terminal marking shall be securely attached to the device:

- Use 75°C wire only.
- Required wire type and range for single installation listed below:

Frame size	Model No.	Terminal type	Wire range (AWG)	Required torque (lb. in)
S1	LXM18E&U01M2X LXM18P#U01M2X	L, N, B2, B1, P, U, V, W	14	N/A
	LXM18E&U02M2X LXM18P#U02M2X	L, N, B2, B1, P, U, V, W	14	N/A
	LXM18E&U04M2X LXM18P#U04M2X	L, N, B2, B1, P, U, V, W	14	N/A
S2	LXM18E&U07M2X LXM18P#U07M2X	L, N, B2, B1, P, U, V, W	14	N/A
	LXM18E&U10M2X LXM18P#U10M2X	L, N, B2, B1, P, U, V, W	14	N/A
	LXM18E&U15M2X LXM18P#U15M2X	L, N, B2, B1, P, U, V, W	12	N/A
S3	LXM18E&U20M2X LXM18P#U20M2X	L1, L2, L3, N, B2, B1, P, U, V, W	10	10.6
	LXM18E&U30M2X LXM18P#U30M2X	L1, L2, L3, N, B2, B1, P, U, V, W	10	10.6

- Tightening torque and wire range for filed grounding wiring with pressure terminals connectors are marked adjacent to the terminal or on the wiring diagram.

Frame size	Required torque (in-lbs)	Wire range (AWG)
S1	11.5	7
S2	11.5	7
S3	11.5	7

Description	Motor protection circuit breakers, with optional setting current
Type	GV2P**

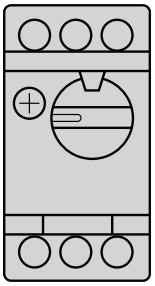

Constituent parts

Description	Type	Specifications	Manufacturer	Related model
Contactor	GV2P10	6.3A	Schneider Electric	LXM18P*U01/02M2X
	GV2P14	10A		LXM18P*U04M2X
	GV2P16	14A		LXM18P*U07M2X
	GV2P20	18A		LXM18P*U10M2X
	GV2P22	25A		LXM18P*U15/20M2X
	GV2P32	32A		LXM18P*U30M2X

Description	Motor protection using class J fuses
Type	LPJ***

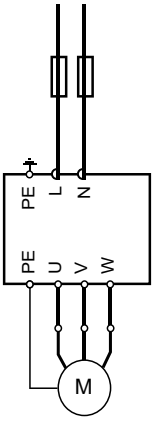

Constituent parts

Description	Type	Specifications	Manufacturer	Related model
J fuses	LPJ·6SP	6A	Schneider Electric	LXM18P*U01/02M2X
	LPJ·10SP	10A		LXM18P*U04M2X
	LPJ·15SP	15A		LXM18P*U07M2X
	LPJ·20SP	20A		LXM18P*U10M2X
	LPJ·25SP	25A		LXM18P*U15/20M2X
	LPJ-35SP	35A		LXM18P*U30M2X

Description	Mains supply contactor, with optional control voltage and control
Type	LC1D****

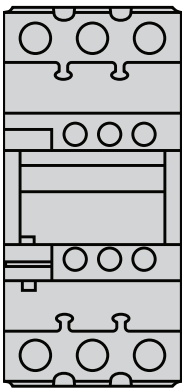

Constituent parts

Description	Type	Specifications	Manufacturer	Related model
Contactor	LC1D09**	9 A	Schneider Electric	LXM18P*U01/02/04/07M2X
	LC1D12**	12 A		LXM18P*U10M2X
	LC1D18**	18 A		LXM18P*U15M2X
	LC1D32**	32 A		LXM18P*U30M3X

(**) control voltage:

- B7-24 Vac
- M7-220 Vac
- BD-24 Vdc

Installation

Installation Precautions

About Electromagnetic Compatibility (EMC)

Signal interference may cause unexpected responses of the servo drive and other equipment in the vicinity of the servo drive.

⚠ WARNING

SIGNAL AND EQUIPMENT INTERFERENCE

- The drive is only operated with the specified external power filter.
- Install the wiring in accordance with the EMC requirements described in this document.
- Verify compliance with the EMC requirements described in this document.
- Verify compliance with all EMC regulations and requirements applicable in the country where the product is operated and with all EMC regulations and requirements applicable at the installation site.

Failure to follow these instructions can result in death, serious injury, or equipment damage.

This drive meets the EMC requirements according to the standard IEC 61800-3 if the input filter is properly installed as described in System Accessories, page 71 of this manual.

⚠ WARNING

ELECTROMAGNETIC DISTURBANCES OF SIGNALS AND DEVICES

Use proper EMI shielding techniques to help prevent unintended device operation according to the standard IEC 61800-3.

Failure to follow these instructions can result in death, serious injury, or equipment damage.

The product is not intended to be used on a low-voltage public network which supplies domestic premises. Radio frequency interference is expected if used in such a network.

⚠ WARNING

RADIO FREQUENCY INTERFERENCE

Do not use these products in domestic electrical networks.

Failure to follow these instructions can result in death, serious injury, or equipment damage.

As a system supplier, it is necessary for you to include these content in the documentation provided to the user.

Pay attention to the EMC requirements for the electrical cabinet when the device is installed in an electrical cabinet:

EMC measures	Objective
Use mounting plates with good electrical conductivity, connect large surface areas of metal parts, remove paint from contact areas.	Good conductivity due to large surface contact.
Earth the switchgear, the switchgear door and the mounting plate with earth straps or earth wires. The conductor cross section must be at least 10 mm^2 (AWG 7)	to reduce emissions.
Install switching devices such as power contactors, relays or solenoid valves with interference suppression units or arc suppressors (for example, diodes, varistors, RC circuits).	To reduce mutual interference coupling.
Do not install power components and control components adjacent to one another.	To reduce mutual interference coupling.

The following measures can improve the EMC-dependent values depending on the application:

EMC measures	Objective
Use power reactors.	To reduce power harmonic oscillation and prolong product service life.
Install in a closed switchgear and use shielding measures to attenuate interference from radiation.	To improve the EMC limit values.

Residual Current Devices

Direct current can be introduced in the protective earth conductor of this drive. If a residual current device (RCD / GFCI) or a residual current monitor (RCM) is used for protection against direct or indirect contact, the following specific types must be used:

⚠WARNING

DIRECT CURRENT CAN BE INTRODUCED INTO THE PROTECTIVE EARTH CONDUCTOR

- Use a Type A Residual Current Device (RCD / GFCI) or a Residual Current Monitor (RCM) for single-phase drives connected to a phase and to the neutral conductor.
- For inverter, use a certified type B Residual Current Device (RCD/GFCI) or a Residual Current Monitor (RCM); for three-phase devices and for single-phase devices not connected to phase or neutral conductor, use a type B residual current device (RCD/CFCI) or residual current monitor (RCM) that is sensitive to each type of current.

Failure to follow these instructions can result in death, serious injury, or equipment damage.

Direct current can be introduced in the protective conductor of this drive after energized.A certain amount of high-frequency leakage current will be generated during operation. In order to implement grounding protection to prevent electric shock accidents and leakage- current-caused fire hazard, install a Type B (DC sensing type) residual current protective circuit breaker (RCD) specified in IEC 61008-2-1, IEC/EN 62423, or EN 61008-2-1 on the primary side of the power

supply of the servo drive, and it is recommended that a Type B RCD with an operating current of not less than 30 mA be installed on each drive in order to prevent RCDs from malfunctioning. When multiple servo drives are connected in parallel to a RCD, it is recommended to select a B-type RCD with an action current of not less than 300 mA (it should be based on the actual working conditions of the customer, and to be determined by the customer; the relevant recommendations cannot be regarded as a one-size-fits-all solution to ensure personal safety completely).

At the same time, it is necessary to consider the leakage current of the entire servo drive system (total leakage current of the servo drive system = leakage current of the servo drive itself + leakage current of the motor cable + leakage current of the motor). In case of a trip, please re-select the B-type RCD according to the working conditions of the servo drive system.

- The drive has an increased leakage current at the moment power is applied. Use a residual current device (RCD / GFCI) or a residual current monitor (RCM) with a response delay.
- High-frequency currents must be filtered.

Required Cables

Cables should not be twisted, stretched, crushed or bent. Always use cables that comply with the cable specification. Consider the following in determining suitability of the cables:

- Suitable for drag chain applications or not
- Temperature range
- Chemical resistance
- Whether open-wiring is needed
- Whether underground wiring is needed

Potential differences can result in excessive currents on the cable shields. Use equipotential bonding conductors to reduce currents on the cable shields.

⚠ WARNING

UNINTENDED MOVEMENT

- Ground cable shields for all fast I/O, analog I/O, and communication signals at a single point.*
- Route communications and I/O cables separated from power cables.

Failure to follow these instructions can result in death, serious injury, or equipment damage.

* Multipoint grounding is permissible if connections are made to an equipotential ground plane dimensioned to help avoid cable shield damage in the event of power system short-circuit currents.

The potential compensation conductor must be designed according to the maximum compensation current. Conductor cross sections are shown below:

- 16 mm^2 (AWG 5) for equipotential bonding conductors up to 200 m (656 ft) in length.
- 20 mm^2 (AWG 4) for equipotential bonding conductors over 200 m (656 ft) in length.

The following describe the conductor cross sections for two methods of installation:

- Method of installation B2: Cables in conduits or covered cable trunking systems
- Method of installation E: Cables on open cable trays

Cross section in mm² (AWG)(1)	Current-carrying capacity with method of installation B2 in A(2)	Current-carrying capacity with method of installation E in A(2)
0.75 (18)	8.5	10.4
1.0 (17)	10.1	12.4
1.5 (15)	13.1	16.1
2.5 (13)	17.4	22
4.0 (11)	23	30
6.0 (9)	30	37
10 (7)	40	52
16 (5)	54	70
25 (3)	70	88

(1) See section System Accessories, page 71 for required cables.

(2) Values as per IEC 60204-1 for continuous operation, copper conductors and ambient air temperature 40 °C (104 °F). See IEC 60204-1 for more information.

Note the derating factors for grouping of cables and correction factors for other ambient conditions (IEC 60204-1).

The conductors must have a sufficiently large cross section so that the upstream fuse can trip. In the case of longer cables, it may be necessary to use a larger conductor cross section to reduce the energy losses.

Mounting of the Drive

Unpacking and Checking

Verify the contents in time after unpacking.

- Consistency with the part type you ordered.
- Inspect the servo drive for visible damage.
- Inspect the intactness of the protective coating of heat dissipation holes on the servo driver.
- Check whether there are attached plugs for the servo drive for power supply, external brake resistor, and motor output.

(The plugs for I / O control interface and encoder interface are not included)
Contact your local agent in time if there is any discrepancy.

Switchgear

The servo drive is a IP20 device. It should be installed in a switchgear (or enclosure) with the adequate degree of protection. The switchgear (enclosure) must have a sufficient size so that all devices and components can be permanently installed and wired in compliance with the EMC requirements. The ventilation of the switchgear (enclosure) must be sufficient to comply with the specified ambient conditions for the servo drives operated in the switchgear. Install and operate the drive in a switchgear (enclosure) rated for its intended environment and secured by a keyed or tooled locking mechanism.

Installation direction

Mount the servo drive vertically (+/-10°) on the base. Please firmly install the device to the mounting surface through 2 mounting holes (the location of the mounting holes varies depending on the servo drive reference).

Painted surfaces may cause higher resistance to ground or insulation. Before mounting the device to a painted mounting surface, remove all paint across a large area of the mounting points.

Mounting Distances, Ventilation

When selecting the mounting point of the servo drive in the switchgear (or enclosure), note the following requirements. These requirements also apply when mounting multiple servo units side-by-side.

- Make sure that the front of the servo drive (the display side of the HMI) faces the operator.
- Mount the device vertically (±10°) on the base. This is conducive to cooling the device.
- Ensure the minimum required installation distances at least for cooling and avoiding heat accumulation.
- Do not mount the device close to heat sources.
- Do not mount the device on or near flammable materials.
- The heated airflow from other devices and components must not heat up the air used for cooling the device.
- The front connection cables of the devices are routed upstream or downstream. The minimum required distances must be followed for air circulation and cable installation.

Distance	Unit	Value
Distance a, above the device	mm (in)	
Distance b, below the device	mm (in)	>=50 (1.97)
Distance c, in front of the device*	mm (in)	>=70 (2.76)
Distance d, between the devices	mm (in)	>=50 (1.97)
* The distance should ensure adequate air circulation and be sufficient for plug installation and wiring.		

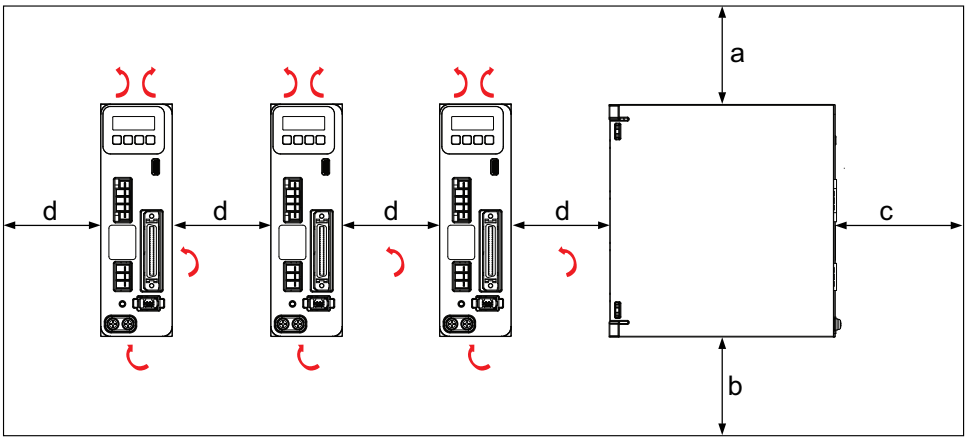

Dimensions of the Mounting Holes

Use the mounting holes to firmly install the servo drive on the mounting plate. When mounting the device, use a Phillips screwdriver whose length is greater than the depth of the servo drive.

- **Size1: 0.1kW … 0.4kW** (**U01/ U02/ U04**) servo drive mounting hole size:

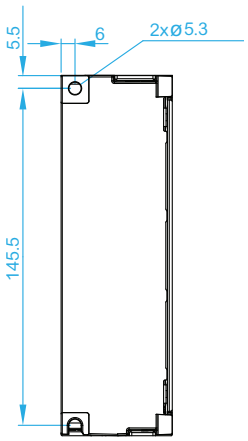

- **Size2: 0.75kW … 1.5kW** (**U07/ U10/ U15**) servo drive mounting hole size:

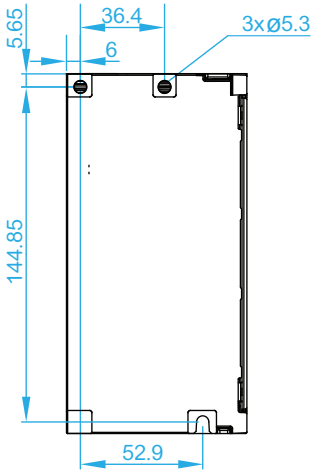

- **Size3: 2.0kW … 3.0kW** (**U20/ U30**) servo drive mounting hole size:

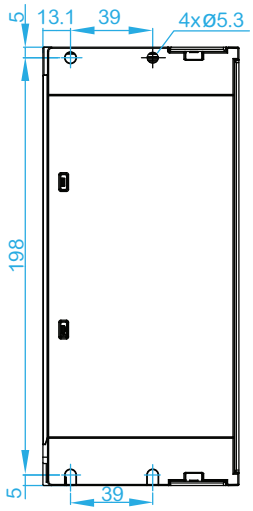

Mounting the Motor

Unpacking and Checking

Verify the contents in time after unpacking.

- Consistency with the part type you ordered.
- Inspect the servo motor for visible damage.
- Verify that the *Safety and Environmental Declarations* is included.
- Verify that the output shaft of the servo motor is protected by a sleeve?

Contact your local agent in time if there is any discrepancy.

Installation direction

The following mounting directions are permitted for the servo motors as defined by IEC 60034-7:

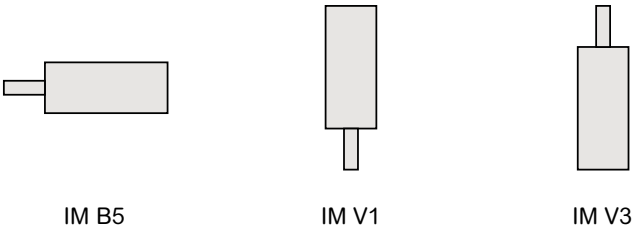

For Use with Machinery

The servo motor has a very large mass. Be careful when mounting it to prevent personal injury or mechanical damage. The output shaft of the servo motor is coated with antirust oil at the factory. Remove the antirust oil before mounting the device.

When the servo motor is used with the machine, use a coupling to ensure the shaft core of the servo motor and that of the machine are in a straight line. Also, when mounting the servo motor, conform to the concentric accuracy requirements shown in the figure below. Lack of concentric accuracy may result in mechanical vibration, heating, damage to the bearings and encoder, and other problems.

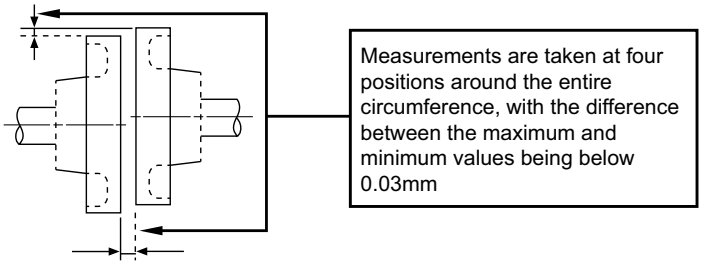

When installing the device on the mounting plate, the servo motor and coupling must be accurately aligned in the axial and radial directions and tightened evenly against each other, and then the fixing bolts must be tightened evenly diagonally. The specified tightening torque must be used here.

For the dimensions of mounting plates and the type of fixing bolts to be used, see the Servo Motor Dimensions/Overload Characteristics/Speed-Torque Curve, page 44section.

When installing the shaft coupling or installing the servo motor on the mounting plate, do not apply direct impact force to the shaft or the back, which may damage the bearings or encoder.

Additional Notes

Oil and water:

1. Ensure that the oil level at the mounting points does not exceed the bottom of the oil seal lip.
2. To prevent excessive wear of the oil seal, ensure that a small amount of grease is available on the lip of the servo motor oil seal as lubrication.
3. When mounting the servo motor facing upward (IM V3), avoid oil from accumulating on the lip of the oil seal.

Stress on the cables:

When handling or mounting the servo motor, always hold on to its main body. Holding on to the main circuit cables, holding brake control cables, or encoder cables only may cause the cables to break or the plugs to be damaged.
Be careful to avoid excessive stretching or bending the main circuit cables, brake control cables, or encoder cables when wiring.

After wiring, secure the main circuits, brake control cables or encoder cables so that it is not excessively bent, stretched, or stressed, and so that the cables do not shake and cause wear or damage due to fatigue.

Using the motor plugs:

When using the plugs, note the followings:

1. Visually inspect the plugs and the pins inside for damage, breakage, or bending deformation.
2. Verify that there are no impurities or foreign objects such as metal debris inside the plugs.
3. Verify that the plug wiring has no error.
4. Do not apply impact force to the plugs to prevent them from breaking and damage.
5. The cable connectors of the servo motor for 100 mm/130 mm/180 mm (5 3.94 in/5.12 in/7.09 in) flanges need to be securely locked to the socket. When mounting the 180 mm (7.09 in) flange mounted motors, consider the quality of the product. Suitable lifting equipment may be a need.

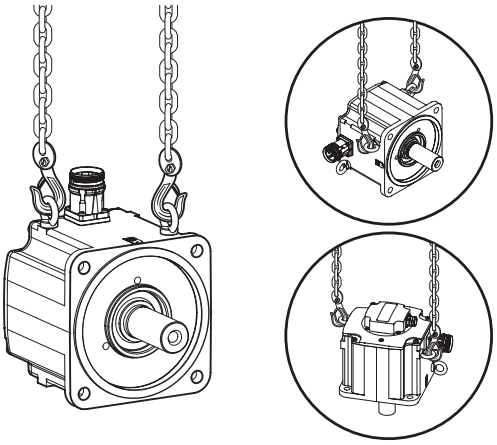

Radial and axial loads:

In mechanical design, it is necessary to consider the radial and axial loads applied to the servo motor shafts to prevent the loads from exceeding the allowable value. For the allowable value of radial and axial loads of the servo motors, see the Allowable Loads of Servo Motor Output Shaft, page 43 .

Wiring

Wiring of the Servo Drive

Notes

Prior to mounting and wiring the servo drives, note the followings:

⚠DANGER

INSUFFICIENT GROUNDING

- A protective ground conductor with at least 10 mm^2 (AWG 7) or two protective ground conductors with the same cross section as the conductors supplying the power terminals.
- Verify compliance with all local and national electrical code requirements as well as all other applicable regulations with respect to grounding of the drive system.
- Ground the drive system before applying voltage.
- Do not use conduits as protective ground conductors; use a protective ground conductor inside the conduit.
- Do not use cable shields as protective ground conductors
- Keep foreign objects from getting into the product.
- Verify the correct seating of seals and cable entries in order to avoid contamination such as deposits and humidity.

Failure to follow these instructions will result in death or serious injury.

Direct current can be introduced in the protective earth conductor of this drive. If a residual current device (RCD / GFCI) or a residual current monitor (RCM) is used for protection against direct or indirect contact, the following specific types must be used:

⚠WARNING

DIRECT CURRENT CAN BE INTRODUCED INTO THE PROTECTIVE EARTH CONDUCTOR

- Use a Type A Residual Current Device (RCD/GFCI) or a Residual Current Monitor (RCM) for single-phase drives connected to a phase and to the neutral conductor.
- For inverter, use a certified type B Residual Current Device (RCD/CFCI) or a Residual Current Monitor (RCM); for three-phase devices and for single-phase devices not connected to phase or neutral conductor, use a type B residual current device (RCD/CFCI) or residual current monitor (RCM) that is sensitive to each type of current.

Failure to follow these instructions can result in death, serious injury, or equipment damage.

Make sure all wiring is done without voltage input.

For wiring of power terminal according to UL 61800-5-1, it meets with:

- Only Use at least rated 75 °C (167 °F) copper conductors.
- Minimum cross section of copper conductors: AWG 14.

Overview of the Connections of the Servo Drives

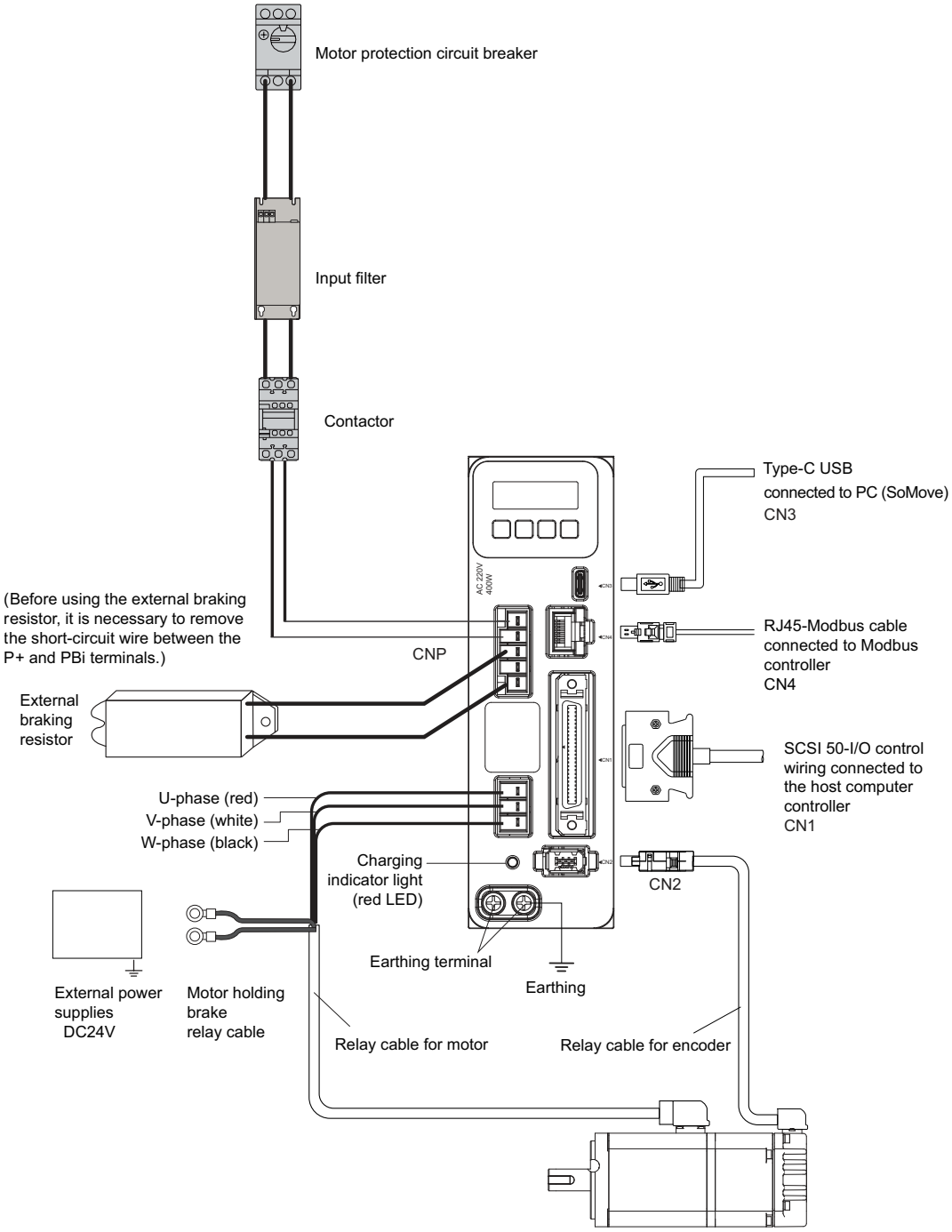

Designation	Description
CNP	Servo drive main circuit terminal
CN1	Servo drive signal interface
CN2	Servo drive encoder interface
CN3	Servo driver to host computer programming interface
CN4	Modbus interface

Connectors and Terminals of the Servo Drives

Terminal marking	Function	Description	
L / N	Input circuit	For models with single-phase mains supply, connected to single-phase 220 V mains supply	
R / S / T	Input circuit	For models with three-phase mains supply, connected to three-phase 220 V mains supply	
P+/PBi/PBe/ N	Braking resistor connection terminal	N empty terminal for models with three-phase mains supply, without connection wires	
		Use internal braking resistors	Factory default, short wires to P+ and PBi
		Use external braking resistors	Remove the short wires and connect P+ and PBe
U/V/W	Motor output terminal	Connect motor power terminal	
CN1	I/O connection terminal	Connected to the host computer controller	
CN2	Encoder connection terminal	Connected to the motor encoder	
CN3	Type-C USB connection terminal	Cable connection to the host computer for commissioning	
CN4	Modbus connection terminal	Optional function port according to the reference for Modbus communication connection	
⏚ ✖2	Earthing terminal	Connects power input earth wires and motor earth wires	

Connection Methods of the Mains Supply in a Main Circuit of the Servo Drives

The connections of the mains supply in a circuit of the servo drive include single-phase and three-phase connections according to the power of the device, with the single-phase connection used for 1.5 kW and below models.

Check that the mains power supply is of an approved type prior to connecting it, and do not operate until it is firmly connected.

- All Size I (0.1~0.4 kW) and Size 2 (0.75~1.5 kW) servo drives use single-phase 220Vac input.
- All Size 3 (2~3 kW) servo drives use three-phase 220Vac input
- The mains supply system supports TT/TN earthing, but does not support IT earthing

Form factor and power rating	~220V	Description
Size 0.1, 0.1~0.4 kW	L / N	Single-phase 220 V
Size 2, 0.75~1.5 kW	L / N	Single-phase 220 V
Size 3, 2~3 kW	R / S / T	Three-phase 220 V

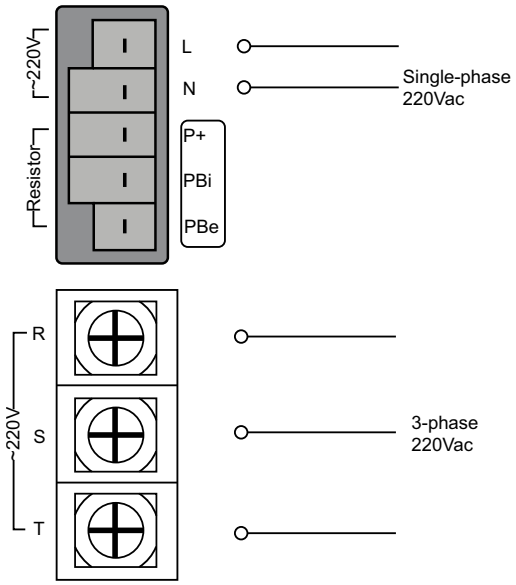

This product has a leakage current greater than 3.5 mA. If the protective earth connection is interrupted, a hazardous touch current may flow if the housing is touched.

⚠ DANGER

INSUFFICIENT GROUNDING

- A protective ground conductor with at least 10 mm² (AWG 7) or two protective ground conductors with the same cross section as the conductors supplying the power terminals.
- Verify compliance with all local and national electrical code requirements as well as all other applicable regulations with respect to grounding of the drive system.
- Ground the drive system before applying voltage.
- Do not use conduits as protective ground conductors; use a protective ground conductor inside the conduit.
- Do not use cable shields as protective ground conductors
- Keep foreign objects from getting into the product.
- Verify the correct seating of seals and cable entries in order to avoid contamination such as deposits and humidity.

Failure to follow these instructions will result in death or serious injury.

⚠ WARNING

INCORRECT MAINS VOLTAGE

Verify that the product is approved for the mains voltage before applying power and configuring the product.

Failure to follow these instructions can result in death, serious injury, or equipment damage.

Cable specifications:

The conductors must have a sufficiently large cross section so that the fuse at the mains connection can protect the equipment if necessary.

Properties of terminals:

The terminals are approved for stranded conductors and solid conductors. Always use suitable ferrules if stranded conductors are used.

LXM18PC / D	Unit	U01 / U02 / U04M2X
Interface cross-section	mm^2 (AWG)	1 (17)
Ferrule type	–	Type I
Length of wire cable ends (ferrules)	mm (in)	10...15 (0.39...0.59)

LXM18PC / D	Unit	U07 / U10 / U15M2X
Interface cross-section	mm^2 (AWG)	2.5 (13)
Ferrule type	–	Type I
Length of wire cable ends (ferrules)	mm (in)	10...15 (0.39...0.59)

LXM18PC / D	Unit	U20/U30M3X
Interface cross-section	mm^2 (AWG)	4 (11)
Ferrule type		Type Y
Length of wire cable ends (ferrules)	mm (in)	10...15 (0.39...0.59)

Connecting the Braking Resistor

⚠ WARNING

UNINTENDED MOVEMENT

- Ensure that it is not possible to make any contact with a hot braking resistor.
- Do not allow flammable or heat-sensitive parts in the immediate vicinity of the braking resistor.
- Verify that heat dissipation is sufficient by performing a test run under maximum load conditions.

Failure to follow these instructions can result in death, serious injury, or equipment damage.

About the internal braking resistor:

The device is shipped with the internal braking resistor, which can absorb braking energy active.

Drive specification LXM18PC/D	Resistance value of braking resistor in Ω	Power of braking resistor in W
U01/02/04/07M2X	–	–
U10/15M2X	20	60
U20/30M3X	15	80

About the external braking resistor:

An external braking resistor is required for applications when the motor is braked and the bus capacitor of the servo drive or the internal braking resistor cannot absorb the excess braking energy.

⚠ WARNING

UNINTENDED MOVEMENT

- Verify that the braking resistor has a sufficient rating by performing a test run under maximum load conditions.
- Verify that the parameter settings for the braking resistor are correct.

Failure to follow these instructions can result in death, serious injury, or equipment damage.

When selecting the rating of the external braking resistor, note the following conditions:

Drive specification LXM18PC/D	Minimum resistance value of the external braking resistor in Ω
U01 / U02 / U04M2X	40
U07 / U10 / U15M2X	20
U20/U30M3X	15

An insufficiently rated braking resistor can cause overvoltage on the DC bus. Overvoltage on the DC bus causes the power stage to be disabled.

If the resistance value of the external brake resistance is too small, it may cause excessive brake current and damage the brake transistor.

Cable specifications of the external braking resistor:

- Minimum conductor cross-section of the cables should be the same as that of mains supply.
- Shielded cables should be selected.
- Heat-resistant cables must be selected.

Properties of terminals:

The terminals are approved for stranded conductors and solid conductors. Always use suitable ferrules if stranded conductors are used.

LXM18PC / D	Unit	U01 / U02 / U04M2X
Interface cross-section	mm^2 (AWG)	1 (17)
Ferrule type	–	Type I
Length of wire cable ends (ferrules)	mm (in)	10...15 (0.39...0.59)

LXM18PC / D	Unit	U07 / U10 / U15M2X
Interface cross-section	mm^2 (AWG)	1 (17)
Ferrule type	–	Type I
Length of wire cable ends (ferrules)	mm (in)	10...15 (0.39...0.59)

LXM18PC / D	Unit	U20/U30M3X
Interface cross-section	mm^2 (AWG)	4 (11)
Ferrule type	–	Type Y
Length of wire cable ends (ferrules)	mm (in)	10...15 (0.39...0.59)

The braking resistors described in the“External braking resistor, page 87”section of this guide present document are shipped with 3-conductor heat-resistant cables, with the length from 0.75 m (2.46 ft) to 3 m (9.84 ft).

Method of connecting the external braking resistor:

- Power off all supply voltages. Observe the safety instructions concerning electrical installation.
- Verify that no voltages are present.
- Ground the ground connection (PE) of the braking resistor.
- Remove the short-circuit jumper of the internal brake resistor between P+ and PBi on the terminal.
- Connect the external braking resistor to the drive.
- Connect the cable shield to the shield connection (large surface area contact).

Wiring diagram of the external braking resistor

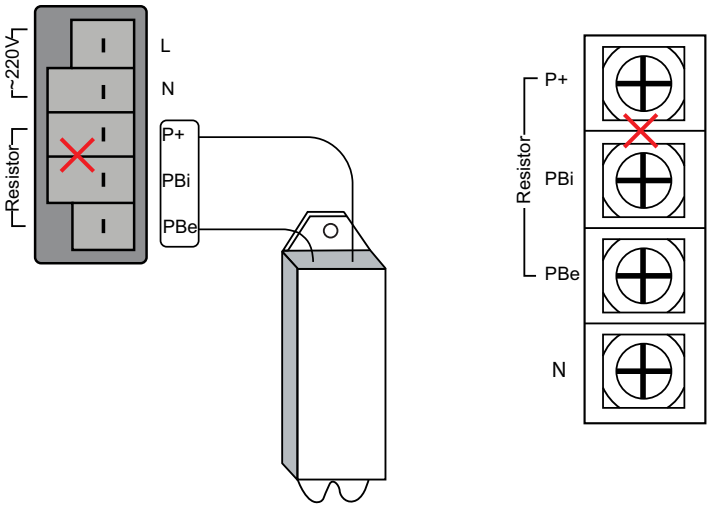

⚠⚠DANGER

ELECTRIC SHOCK, EXPLOSION, OR ARC FLASH

- Disconnect all power from all equipment including connected devices prior to removing any covers or doors, or installing or removing any accessories, hardware, cables, or wires.
- Place a “Do Not Turn On” or equivalent hazard label on all power switches and lock them in the non-energized position.
- Wait 15 minutes to allow the residual energy of the DC bus capacitors to discharge.
- Do not assume that the DC bus is voltage-free when the DC bus LED (Charge LED) is off.
- Block the motor shaft to prevent rotation prior to performing any type of work on the drive system.
- Do not create a short-circuit across the DC bus terminals or the DC bus capacitors.
- Install and fix all covers, accessories, hardware, cables, and wires and confirm a proper grounding before connecting to power.
- Use only the specified voltage when operating this equipment and any associated products.

Failure to follow these instructions will result in death or serious injury.

Connecting the Motor Output Terminal

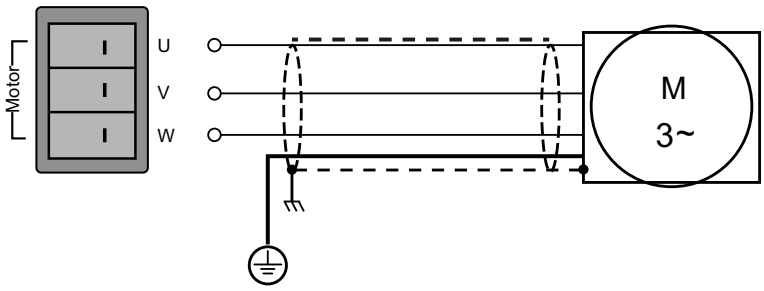

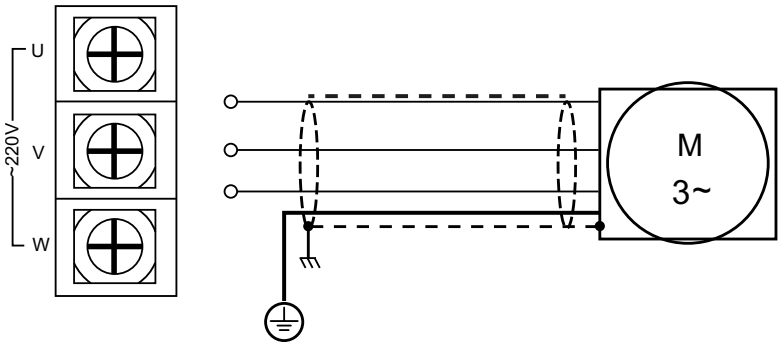

The motor is designed for operation via a driver amplifier. Connecting the motor directly to the input line will damage the motor and can cause fires.

⚠DANGER

FIRES CAUSED BY IMPROPER CONNECTION

Only connect the motor to a matching, approved drive in the way described in the present document.

Failure to follow these instructions will result in death or serious injury.

The motor itself generates voltage when the motor shaft is rotated. So, unexpected high voltages may be present at the motor side power input port. AC voltage in the motor cable can couple voltage to unused conductors.

⚠⚠DANGER

ELECTRIC SHOCK

- Verify that no voltage is present prior to performing any type of work on the drive system.
- Block the motor shaft to prevent rotation prior to performing any type of work on the drive system.
- Insulate both ends of unused conductors of the motor cable.
- Supplement the motor cable earthing conductor with an additional protective earth conductor to the motor housing.
- Verify compliance with all local and national electrical code requirements as well as all other applicable regulations with respect to grounding of the drive system.

Failure to follow these instructions will result in death or serious injury.

Incorrect motor connection will cause the live wire to be exposed outside the motor connector.

⚠⚠DANGER

ELECTRIC SHOCK CAUSED BY INSUFFICIENT ISOLATION

- Ensure that the protective earth (PE) conductor connection of the device is earthed.
- Ensure that the protective earth (PE) terminal is connected.
- When wiring the motor plug-in connector, ensure that the bare metal of the stranded conductors does not protrude from the plug-in connector housing.
- Generally, given vibration or other effects, ensure that motor connection is secured in the motor connector terminals as part of the maintenance program.

Failure to follow these instructions will result in death or serious injury.

The drive system may move unexpectedly by using an unapproved combination of driver amplifier and motor. Even with similar motors, there nay be a risk due to the adjustment of the encoder system. Even if the plug-in connectors of the motor and encoder connectors are mechanically matched, this does not mean that the motor is allowed to be used.

⚠WARNING

UNINTENDED MOVEMENT

Only use approved combinations of driver amplifier and motor.

Failure to follow these instructions can result in death, serious injury, or equipment damage.

Power cables for the servo motors are available with different plug-in connector types depending on the motor to which they are connected.

Power cables with plastic waterproof plug-in connectors for small motors (flange 40 mm.... .80 mm/1.57 in. .3.15 in.):

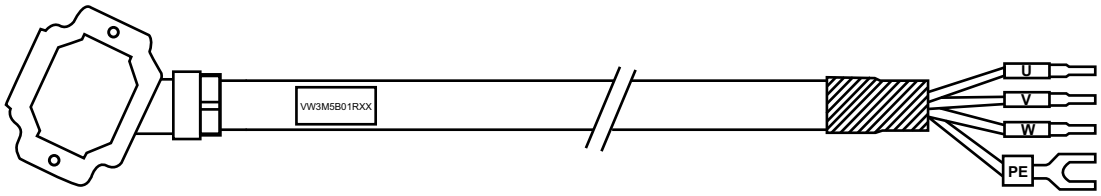

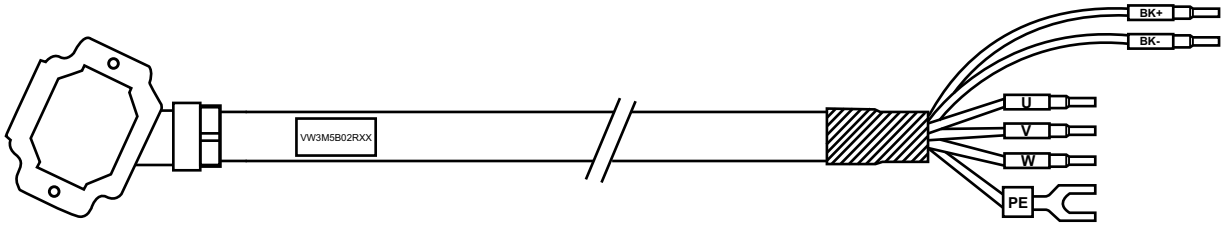

Applicable motor types	Plug-in connectors (motor side)
BCH18*B	<table><tr><th>Signal</th><th>Pin</th></tr><tr><td>U</td><td>1</td></tr><tr><td>V</td><td>2</td></tr><tr><td>W</td><td>3</td></tr><tr><td>PE</td><td>4</td></tr><tr><td>(BK+)</td><td>5</td></tr><tr><td>(BK-)</td><td>6</td></tr></table> 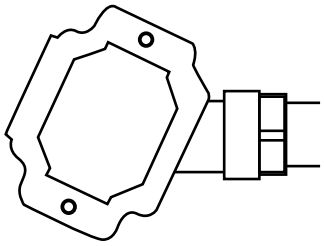 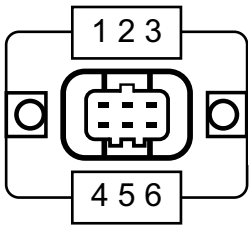
BCH18*D BCH18*F	<table><tr><th>Signal</th><th>Pin</th></tr><tr><td>U</td><td>1</td></tr><tr><td>V</td><td>2</td></tr><tr><td>W</td><td>3</td></tr><tr><td>PE</td><td>4</td></tr><tr><td>(BK+)</td><td>A</td></tr><tr><td>(BK-)</td><td>B</td></tr></table> 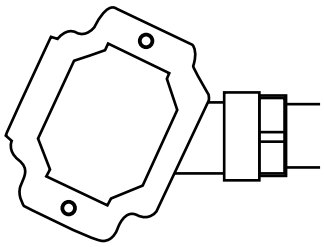 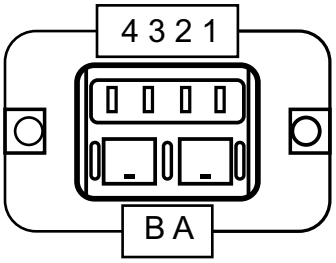

Power cables with military plug-in connectors for large motors (flange >100 mm/3.94 in):

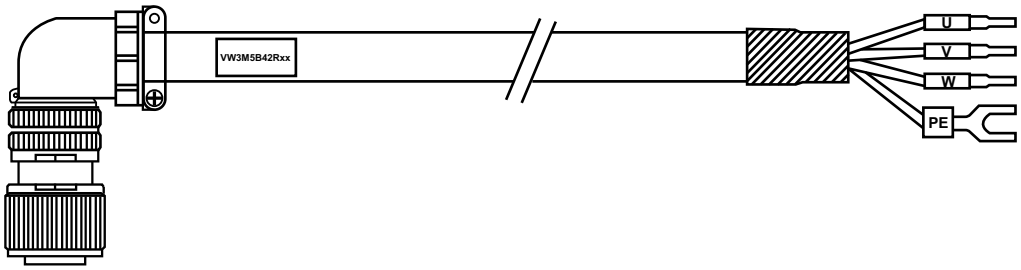

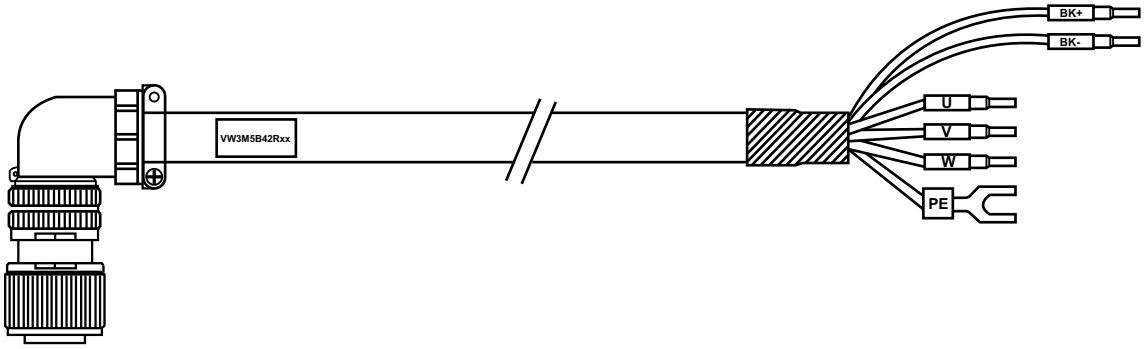

Applicable motor types	Plug-in connectors (motor side)
BCH18*H BCH18*M	**Signal** / **Pin** U / A V / B W / C PE / D (BK+) / 1 (BK-) / 2 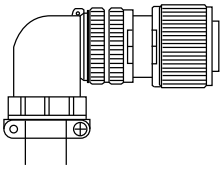 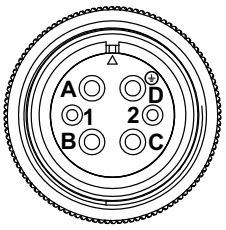
BCH18*R	**Signal** / **Pin** U / A V / B W / C PE / D (BK+) / 1 (BK-) / 2 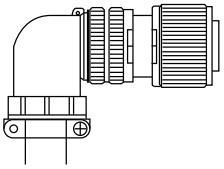 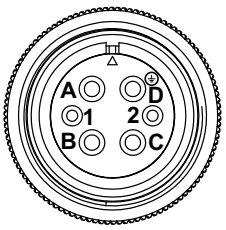

For the compatibility of servo motor power cables with the driver and motor, see the section “Confirmation of a servo drive and its related servo motor, page 28”.

Cable specifications:

Item	Specifications
Shield	–
Twisted pair	–
PELV	The conductors for the holding brake are PELV compliant.
Cable composition	The three conductors of the motor phase must have a sufficiently large cross section so that the fuse at the mains connection can protect the equipmentFuse
Maximum cable length	Depends on the required limit values for conducted interference. Maximum length: 25 m (82.02 ft).

Properties of terminals:

The terminals are approved for stranded conductors and solid conductors. Always use suitable ferrules if stranded conductors are used.

LXM18PC / D	Unit	U01 / U02 / U04M2X
Interface cross-section	mm^2 (AWG)	1 (17)
Ferrule type		Type I
Length of wire cable ends (ferrules)	mm (in)	10...15 (0.39...0.59)

LXM18PC / D	Unit	U07 / U10 / U15M2X
Interface cross-section	mm^2 (AWG)	1 (17)
Ferrule type		Type I
Length of wire cable ends (ferrules)	mm (in)	10...15 (0.39...0.59)

LXM18PC / D	Unit	U20/U30M3X
Interface cross-section	mm^2 (AWG)	4 (11)
Ferrule type		Type Y
Length of wire cable ends (ferrules)	mm (in)	10...15 (0.39...0.59)

Signal Description of the Servo Drive Signal Connector (CN1)

The CN1 connector is a SCSI-50 pin plug-in connector for input and output connections between the host computer and the servo drive.

The functions of the connector include:

- Digital input/output interface
- Analog input/output interface
- Pulse input/output interface

The sampling period for all DI is 250us.

Definition of CN1 plug-in connector pins

Pin	Designation	Function	Pin	Designation	Function
1	MON1	Analog monitoring output 1	2	AI1	Analog input 1
3	MON2	Analog monitoring output 2	4	AI2	Analog input 2
5	AGND1	Analog reference 1	6	AGND2	Analog reference 2
7	VCC_12V	12 VDC power output (analog reference)	8	DQ0+	Digital output 0+
9	DQ0-	Digital output 0-	10	DQ1+	Digital output 1+
11	DQ1-	Digital output 1-	12	DQ2+	Digital output 2+
13	DQ2-	Digital output 2-	14	DQ3+	Digital output 3+
15	DQ3-	Digital output 3-	16	PLS_24	Pulse train in for position control (24 VDC open collector input)
17	SIGN_24	Pulse train in for direction control (24 VDC open collector input)	18	PLS+	Pulse train in for position control (5 VDC open collector input)
19	SIGN+	Pulse train in for direction control (5 VDC open collector input)	20	PLS-	Pulse train in for position control (0 V open collector input)
21	SIGN-	Pulse train in for direction control (0 V open collector input)	22	HPLS+	Pulse train in for position control (differential +)
23	HSIGN+	Pulse train in for direction control (differential +)	24	HPLS-	Pulse train in for position control (differential -)
25	HSIGN-	Pulse train in for direction control (differential -)	26	0VM	Signal ground
27	PTOA-	Analog encoder A-phase differential output -	28	PTOA+	Analog encoder A-phase differential output +
29	PTOB-	Analog encoder B-phase differential output -	30	PTOB+	Analog encoder B-phase differential output +
31	PTOZ-	Analog encoder Z-phase differential output -	32	PTOZ+	Analog encoder Z-phase differential output +
33	-	(Reserved)	34	OCZ+	Analog encoder Z-phase open collector output +
35	OCZ-	Analog encoder Z-phase open collector output -	36	DQ4+	Digital output 4+
37	DQ4-	Digital output 4-	38	DQ5+	Digital output 5+
39	DQ5-	Digital output 5-	40	DI_COM	Digital input common
41	DI0	Digital output 0	42	DI1	Digital output 1
43	DI2	Digital output 2	44	DI3	Digital output 3
45	DI4	Digital output 4	46	DI5	Digital output 5
47	DI6	Digital output 6	48	DI7	Digital output 7
49	DI8	Digital output 8	50	DI9	Digital output 9

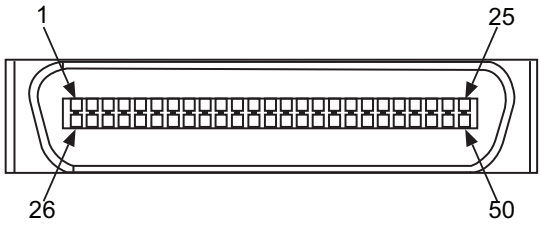

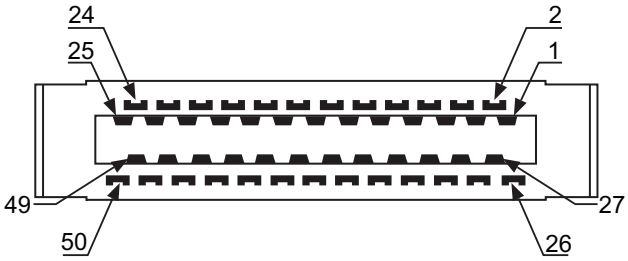

Connection of the Servo Drive Signal Connector (CN1)

Pulse command input

Pulse commands can be input using the open collector (OC) or high-speed differential Line Driver (RS422) method, where

- When the 24Vdc OC input is used, the acceptable maximum pulse frequency is 200 kHz
- When the 5Vdc OC input is used, the acceptable maximum pulse frequency is 500 kHz
- When the high speed differential Line Driver (RS422) is used, the acceptable maximum pulse frequency is 8 Mpps

NOTE: 24Vdc power cannot be input between the PLS+ and PLS-, SIGN+ and SIGN-, HPLS+ and HPLS-, HSIGN+ and HSIGN- pins, otherwise the internal components of the servo drivers will be damaged.

When the input pulse is of open collector NPN type:

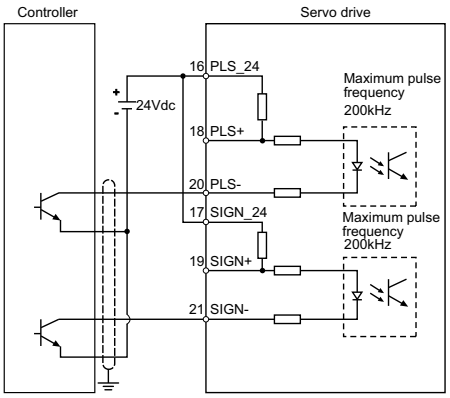

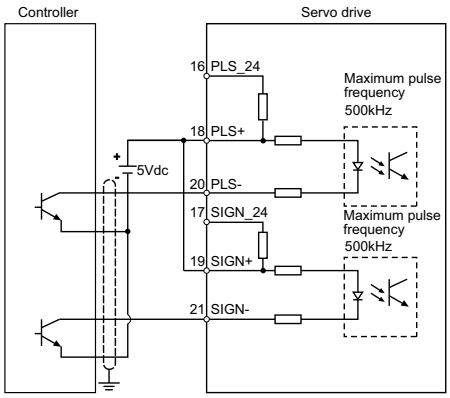

When the input pulse is of open collector PNP type:

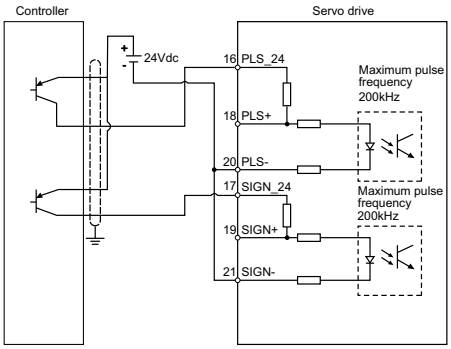

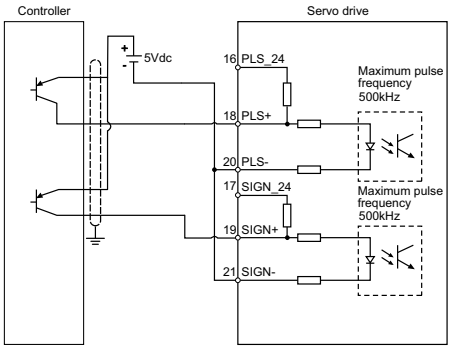

PUSH-PULL Wiring Diagram:

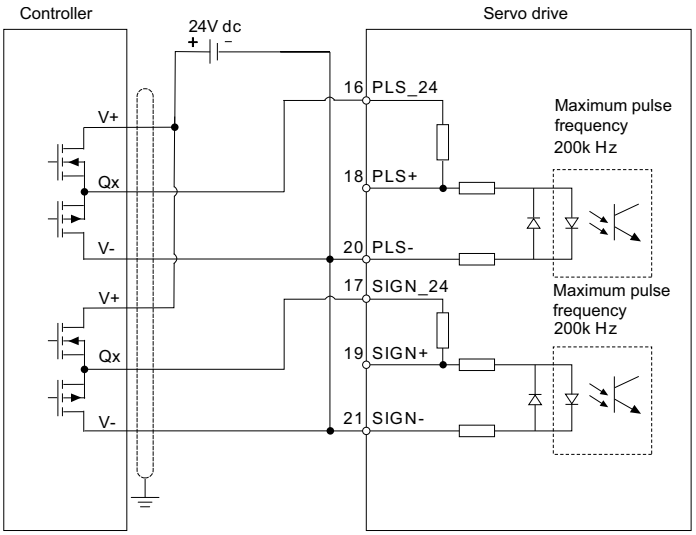

When the input pulse is of high speed differential type:

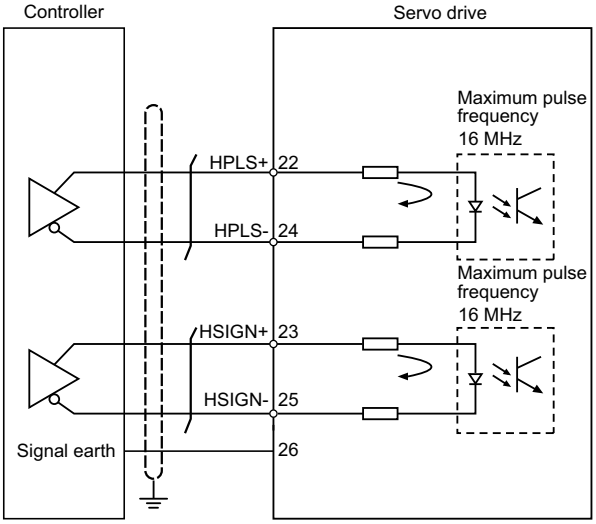

Analog encoder pulse train out

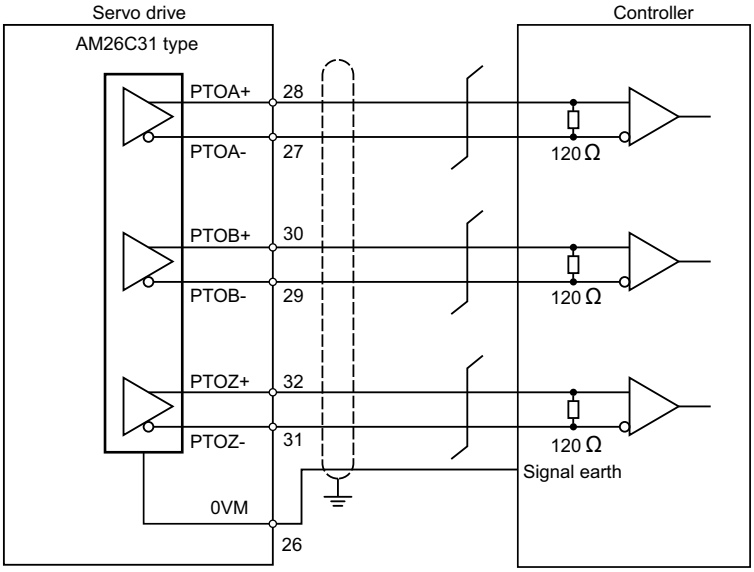

Analog input

The analog input can be used as a command source for velocity or torque. The valid voltage of the analog input ranges from -10V to +10V, and the corresponding velocity or torque command value can be set by the relevant parameters. CN1 Pin 7 provides 12V input for potentiometer related applications.

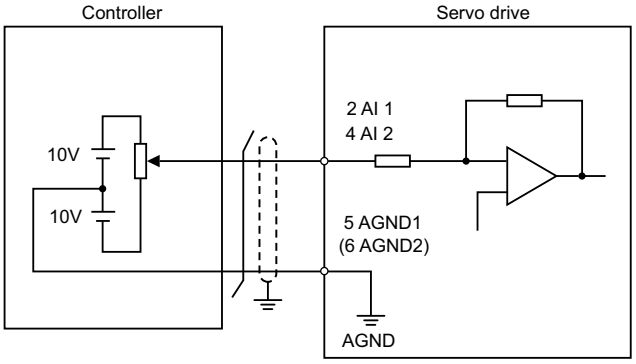

Analog output

The analog output can be used as a monitor for the internal status of the servo drive. The valid voltage of the analog output ranges from -10V to +10V. The internal status of the monitored servo drive and the correspondence between the status value and the analog voltage can be set by the relevant parameters.

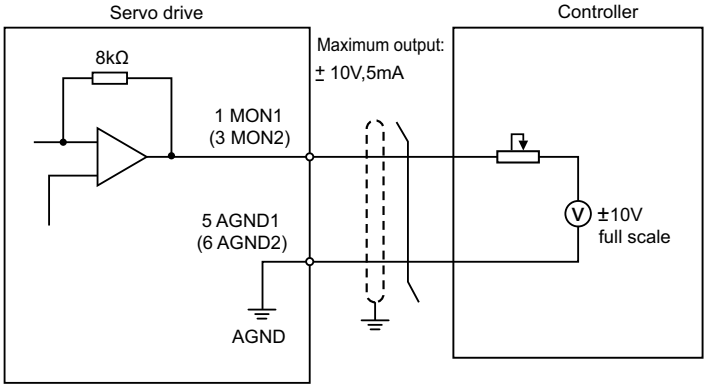

Digital input

The servo drive supports 8 general-purpose digital input points (DI0... DI7) and two fast input points (DI8/DI9) for position capture. The functions of the digital input points are configured via parameters, while the functions related to position capture are only allowed to be configured on the fast input points.

The digital input points of the servo drive share a common terminal and support both sourcing and sinking inputs (NPN & PNP).

When the DI operates in high-speed port mode, if software filtering is enabled, it no longer possesses the characteristics of a high-speed port.

The level characteristics of the digital input signals are as follows:

Signal logic	Unit	DI0…9
Logic 0 / OFF	Vdc	- 3 … + 5
Logic 1 / ON	Vdc	+ 15 … + 30

Methods of the Input Connection for Sinking Output Points (NPN)

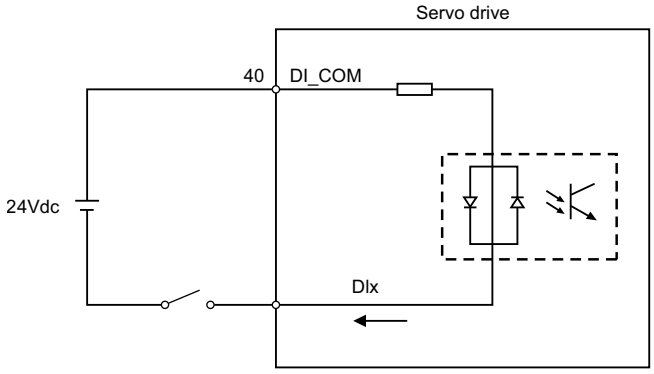

Methods of the Input Connection for Sourcing Output Points (PNP)

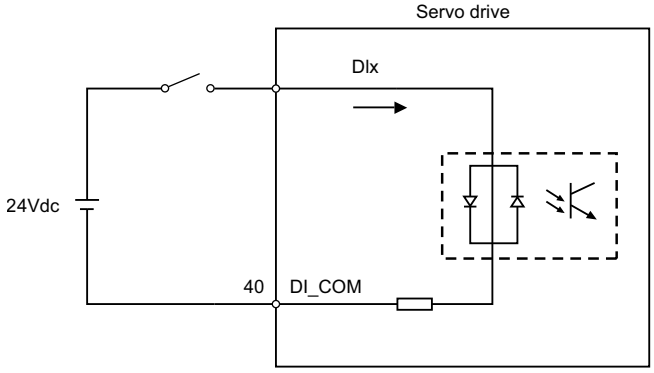

Digital output

The servo drive supports six general-purpose digital output points (DQ0...DQ5) and one digital output point, which functions as an analog encoder Z-phase open collector output (OCZ) by default. The functions of the digital input points are configured via parameters, and the functions of the analog encoder Z-phase open collector outputs can be configured only on OCZ.

The digital output points of the servo drives have limited current-carrying capacity and can only drive small loads such as relays or serve as signal feedback. When connecting inductive loads, a flyback diode should be assembled at the same time, otherwise it will cause damage to the internal components of the servo drives.

The level characteristics of the digital output signals are as follows:

Signal logic	Unit	DQ0...DQ5,OCZ
Output level	Vdc	<=30
Maximum load current	mA	<= 1 00

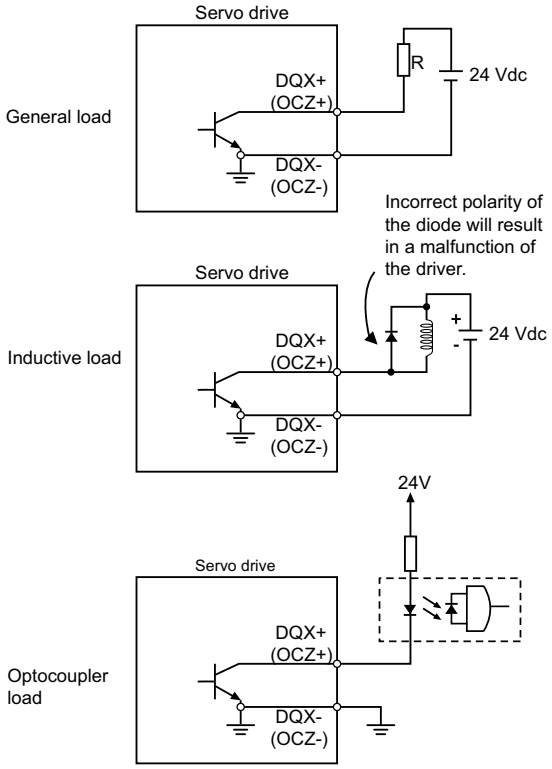

Connection of the Servo Drive Encoder Connector (CN2)

The CN2 connector is an IEEE-1394-6-pin plug-in connector for connecting servo motor encoders.

The encoder connectors at both ends are defined as below:

Encoder cables with plastic waterproof plug-in connectors for small motors (flange 40 mm...80 mm/1.57 in...3.15 in.):

If the customer does not use a multi-turn absolute motor, please choose the cable without a battery box, and ignore the battery wiring.

Wiring diagram for backward outlet of the plastic plug

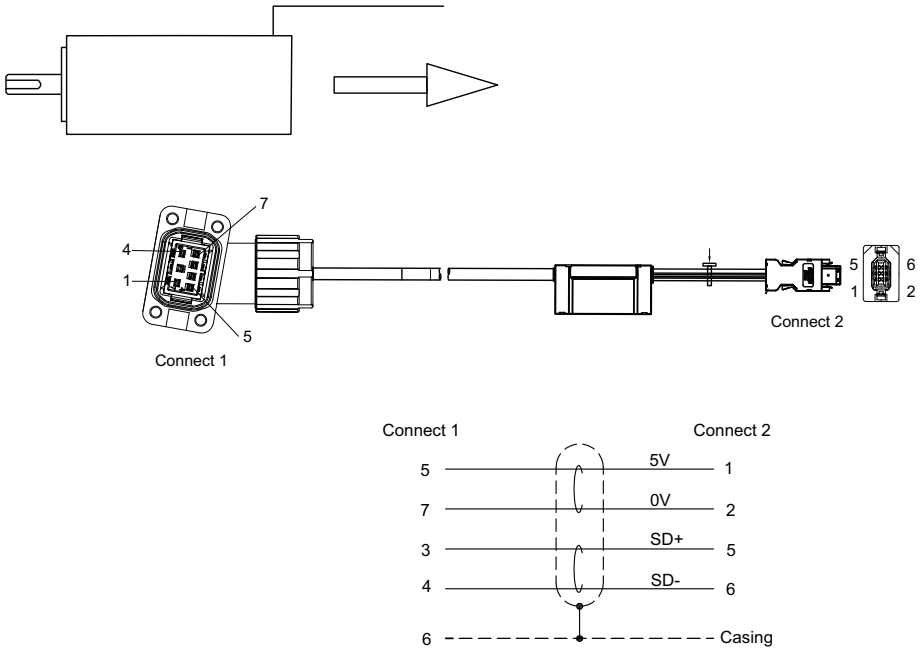

Wiring diagram for forward outlet of the plastic plug

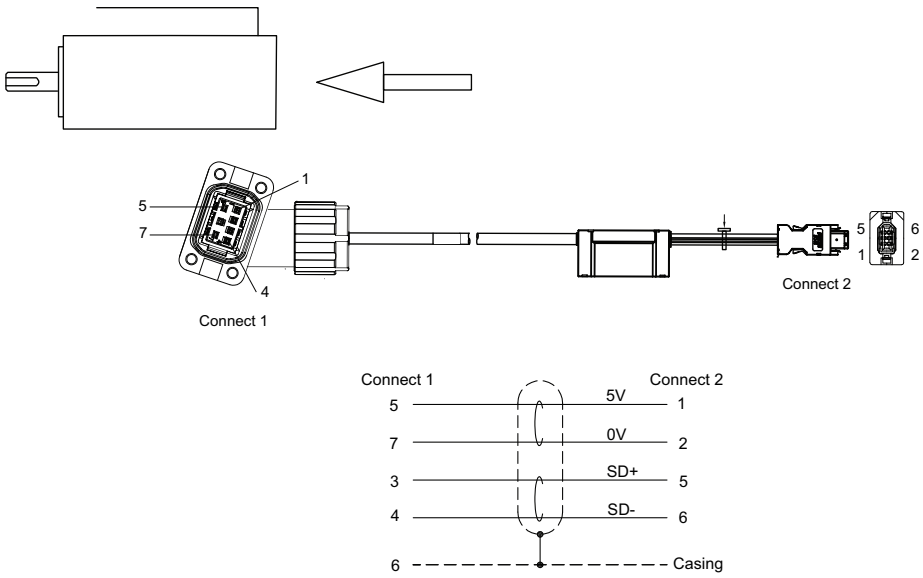

Encoder cables with military plug-in connectors for large motors (flange >100 mm/3.94 in):

If the customer does not use a multi-turn absolute motor, please choose the cable without a battery box, and ignore the battery wiring.

Military plug wiring diagram

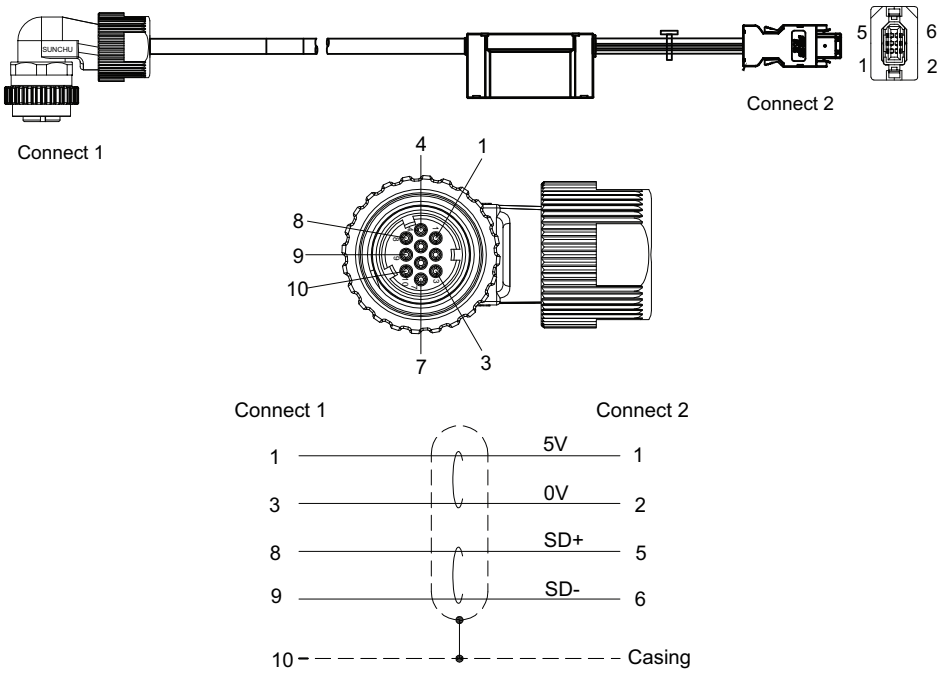

Cable specifications:

Item	Specifications
Shield	Required, both ends earthed
Twisted pair	Required
Cable composition	2*0.5 mm^2+2*0.25 mm^2
Maximum cable length	Depends on the required limit values for conducted interference. Maximum length: 25 m (82.02 ft)

Connection of the Servo Drives to the Host Computer (CN3)

The programming interface (CN3) is a Type-C USB interface. It is only used for the connection of the servo drives to the host computer commissioning software, and cannot be used as a communication bus interface.

NOTICE
UNINTENDED MOVEMENT You cannot use it as a communication bus interface. **Failure to follow these instructions can result in equipment damage.**

The servo drive is connected to the host computer with SoMove software and Lexium18 DTM Library via the CN3 interface for commissioning.

Connection of the Servo Drive Modbus Connection Terminal (CN4)

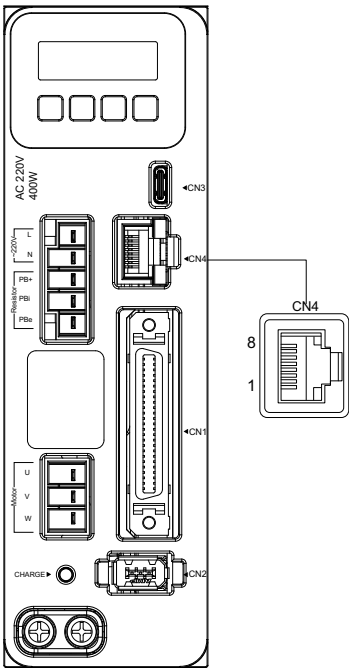

The pin numbers of RS-485 hardware interface are defined as follows:

Pin No.	Signal	Function
1	–	Reserved
2	–	Reserved
3	–	Reserved
4	MOD_D+	Drive data transmission differential signal positive
5	MOD_D-	Drive data transmission differential signal negative
6	–	Reserved
7	MOD_5V	5Vdc - output
8	MOD_GND	Signal ground

⚠ WARNING

UNINTENDED MOVEMENT

When connecting multiple drives to one PLC, please be careful not to connect the No. 7 5V output pins in parallel, otherwise there is a risk of causing damage to the device.

Failure to follow these instructions can result in death, serious injury, or equipment damage.

⚠ WARNING

UNINTENDED MOVEMENT

Do not connect any wires to connections defined as reserved, unused, or marked as “Not to be Connected (N.C.)”.

Failure to follow these instructions can result in death, serious injury, or equipment damage.

Standard Connection Methods

Standard Connection of the Electrical Gear Mode

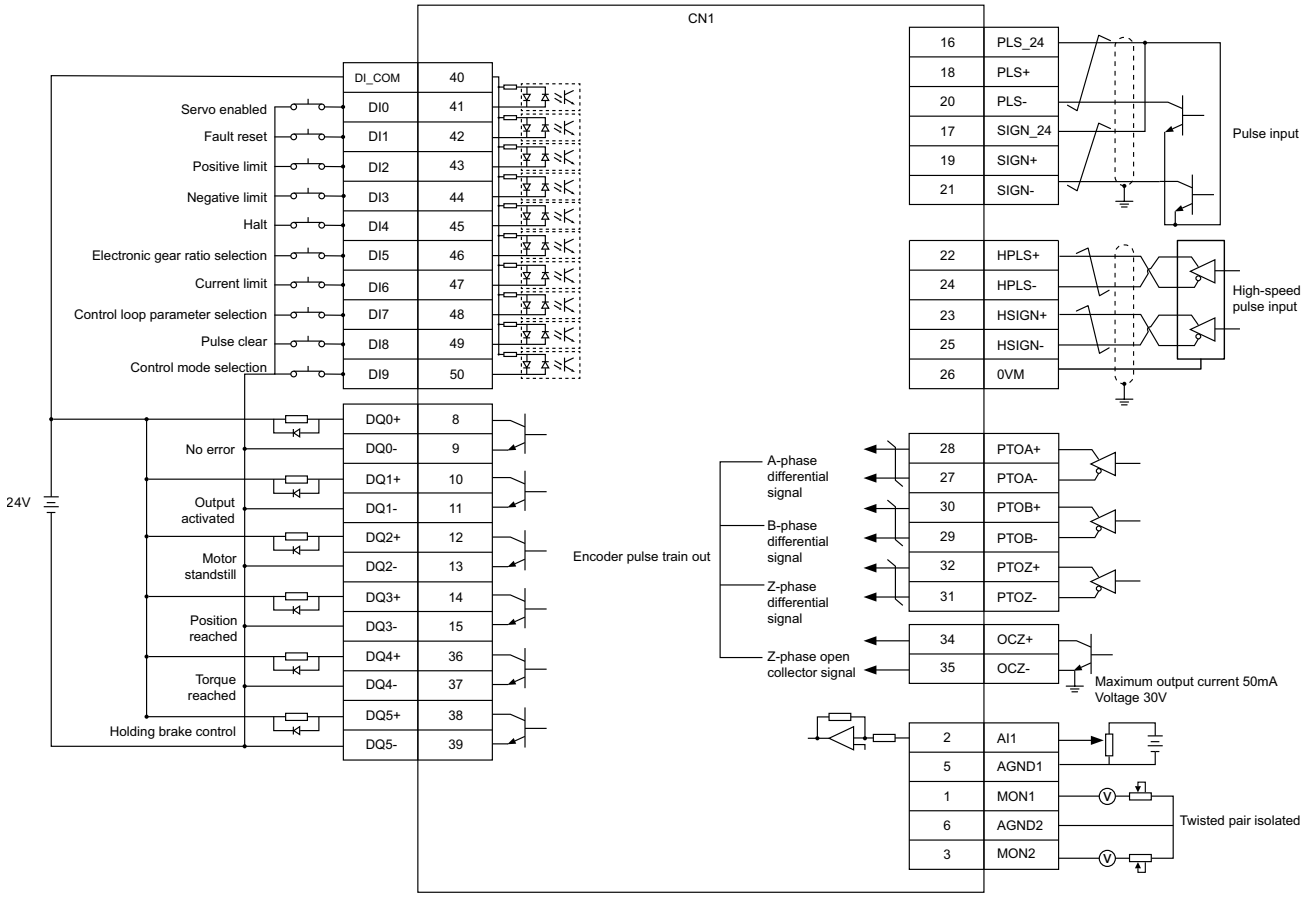

Standard Connection of the Velocity (V/Vz) Mode

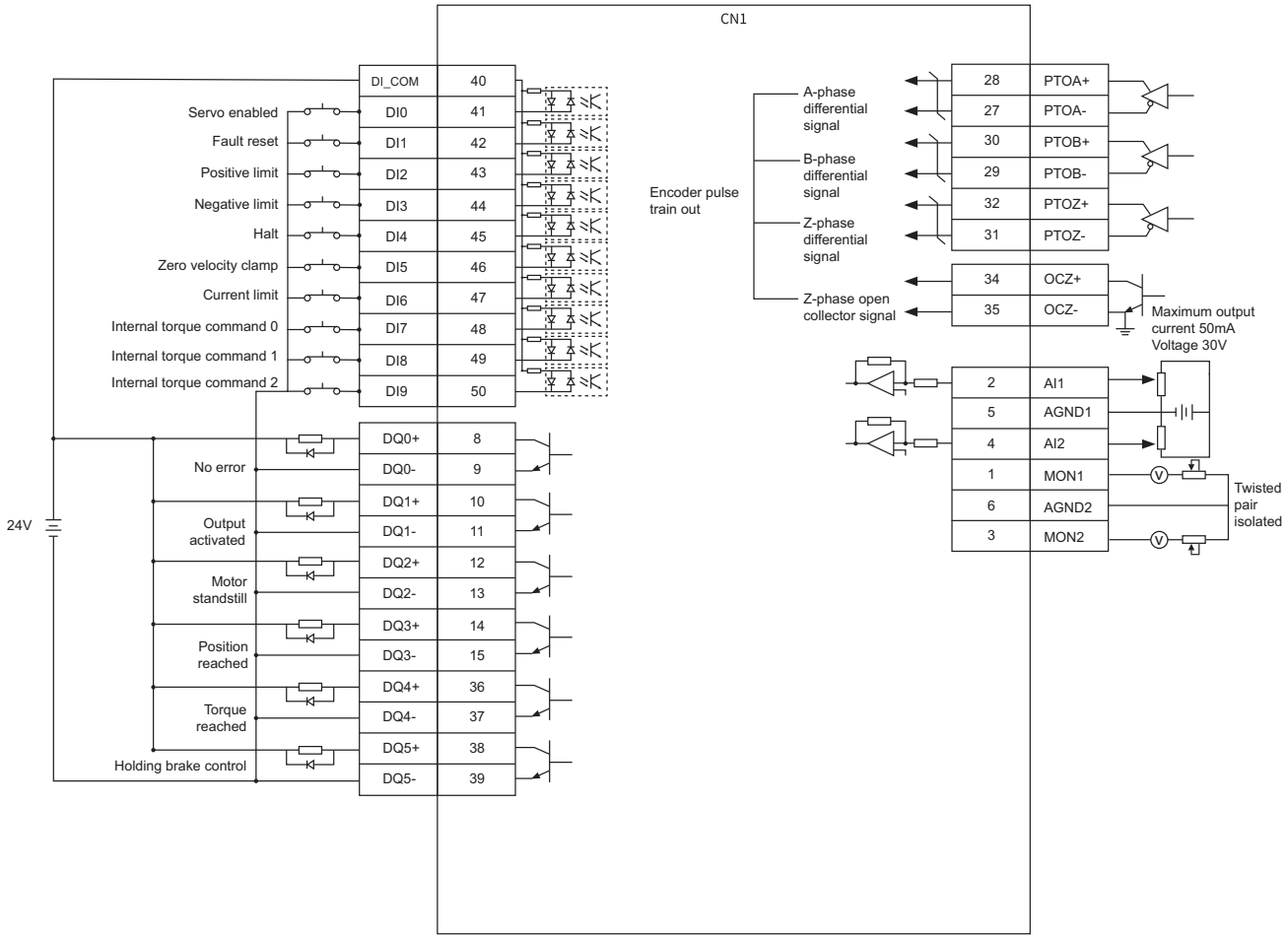

Standard Connection of the Torque (T/Tz) Mode

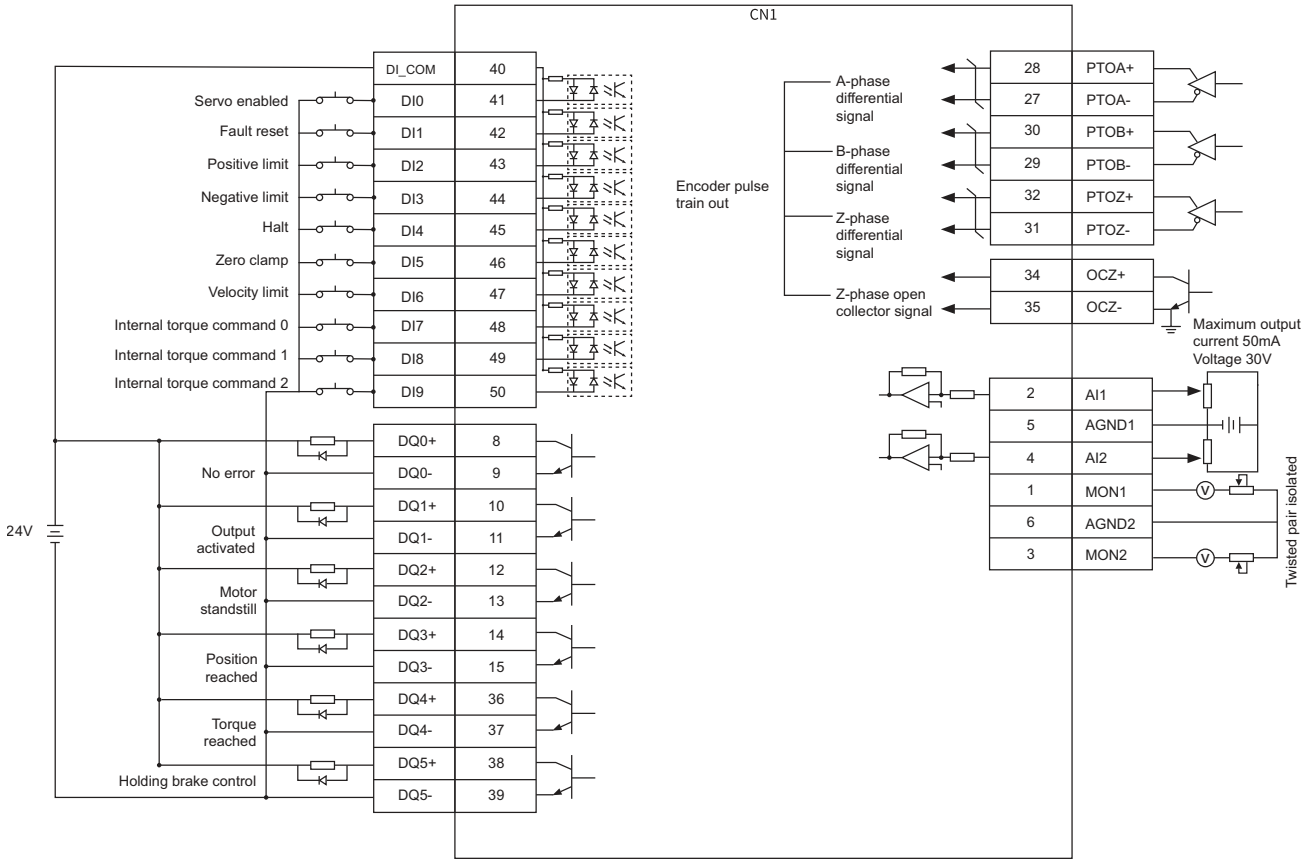

Standard Connection of the Motion Sequence Mode

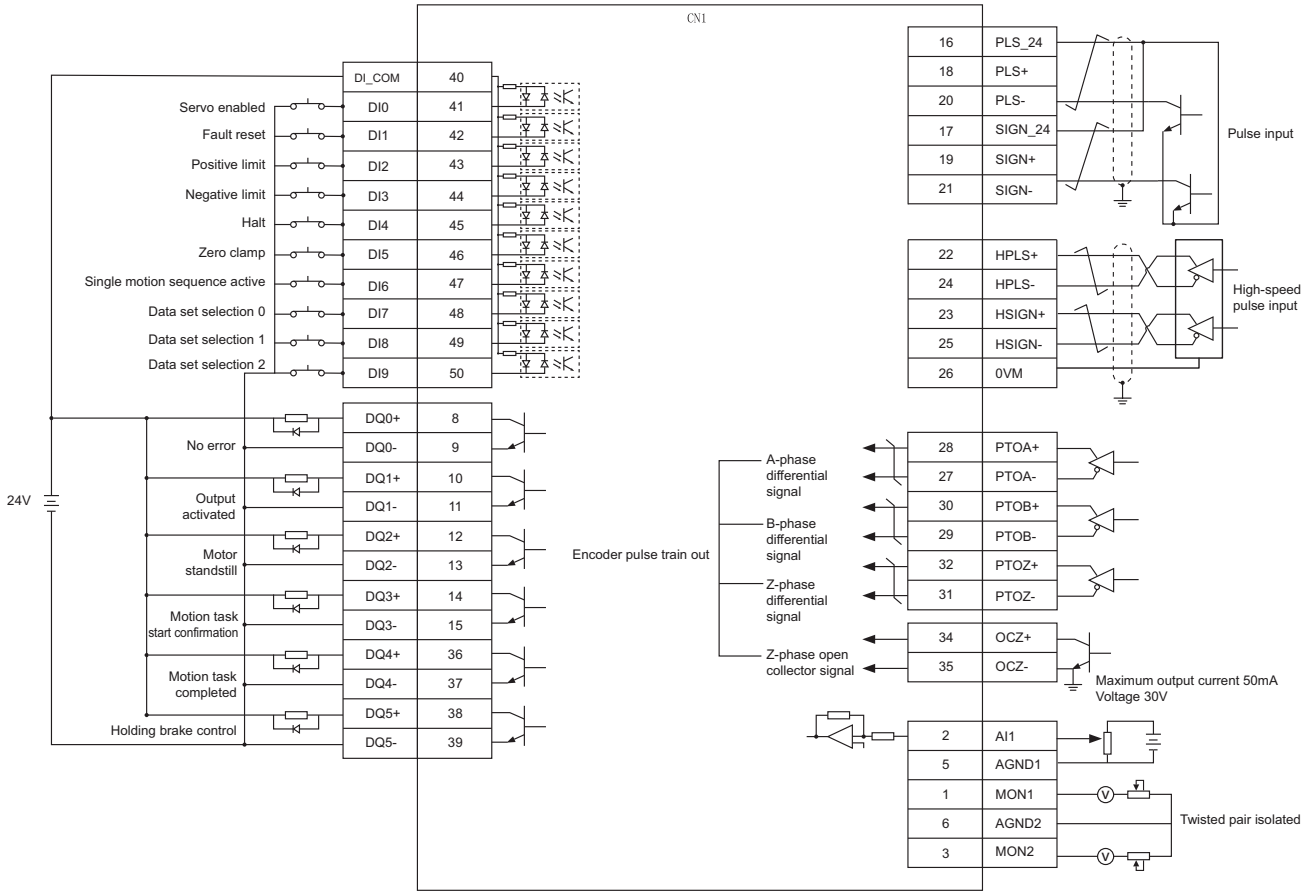

Standard Connection of the Internal Programming (Script) Mode

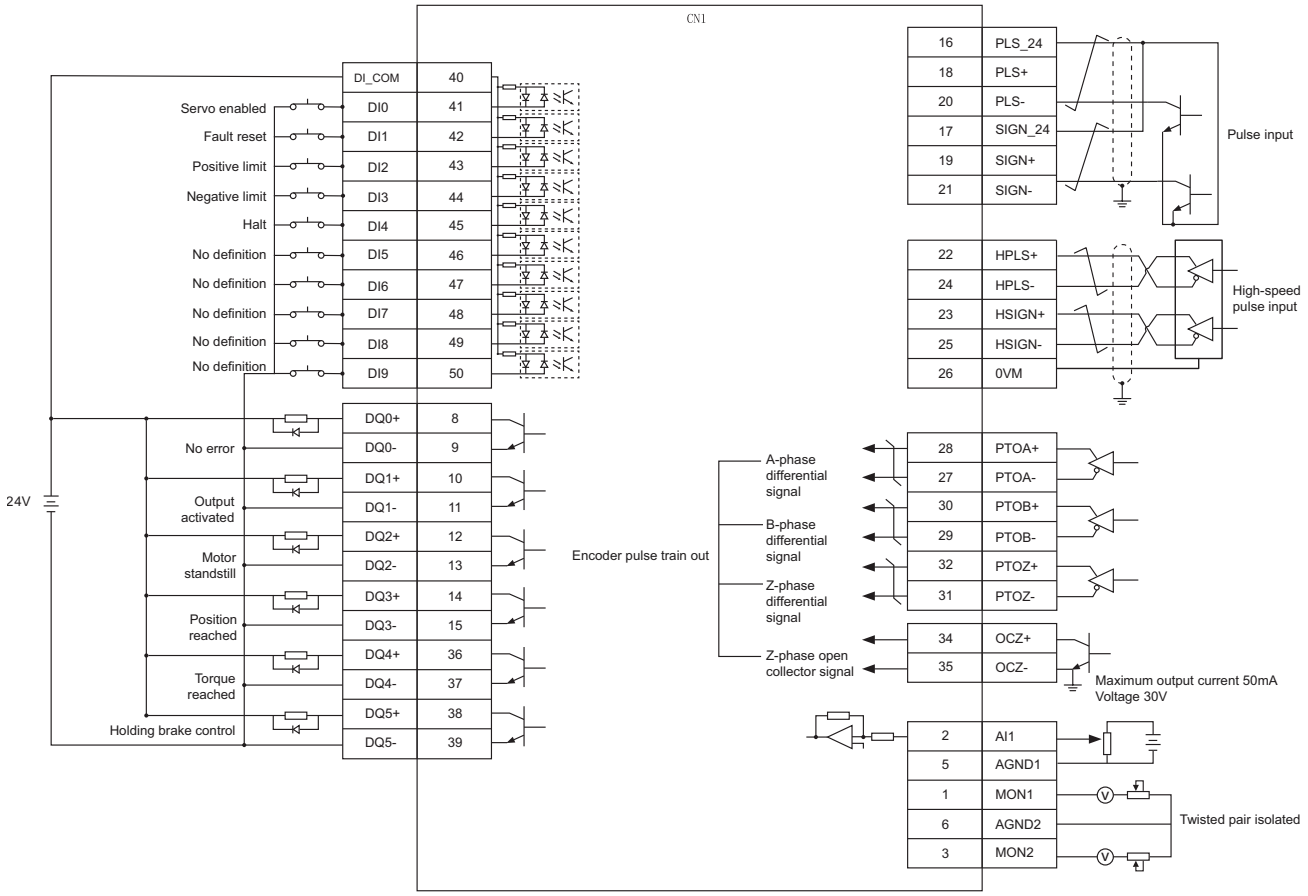

Front Panel

Front Panel

Overview of the Front Panel

The device can set parameters and perform various operations via the integrated front panel Human Machine Interface (HMI). Diagnostic information (e.g. parameter values or error codes) can also be displayed.

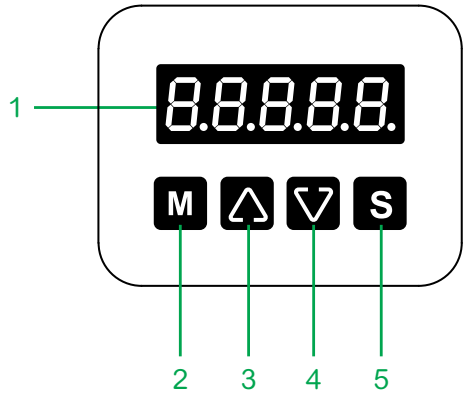

The front panel contains:

Key	Designation
1	5-digit 7-segment LED with 5 decimal points
2	M key
3	Page Up key
4	Page Down key
5	S key

Here is the status of the characters on the 5-digit 7-segment LED display:

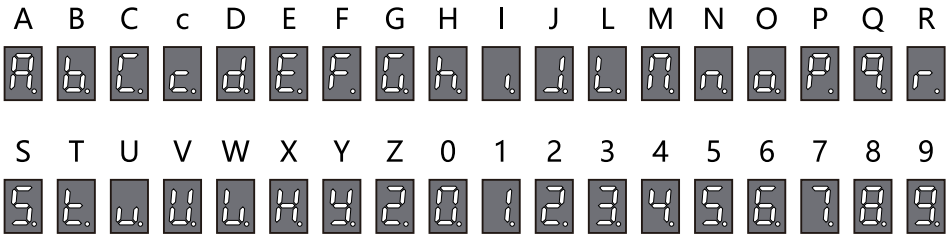

Composition of Each Parameter Set on the Front Panel

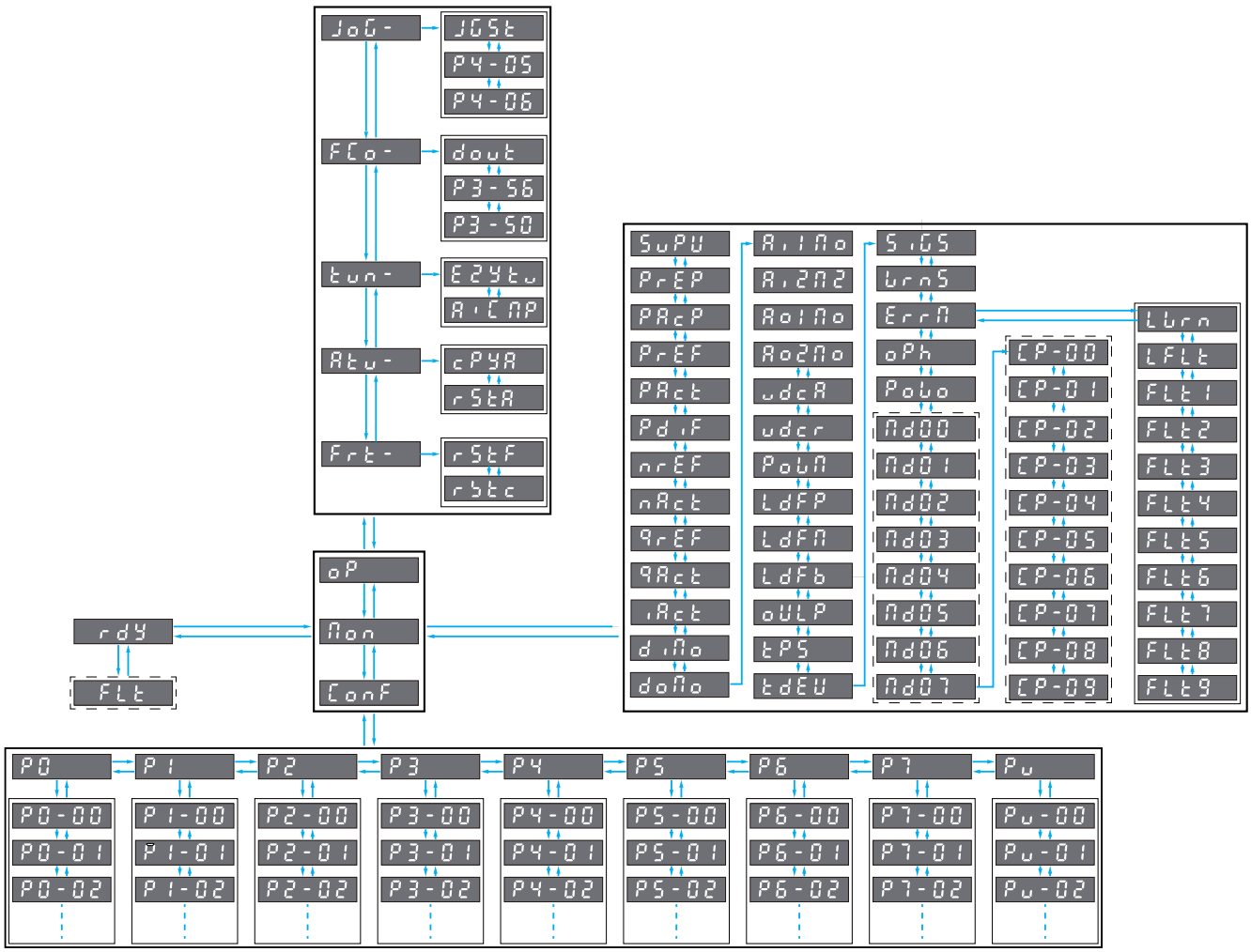

Operation of the Front Panel

Key name	Function description
M key	Click the M key to enable switching between the error message and parameter tree when the drive triggers an alarm.
	Click the M key to return to the upper parameter structure and invalidate unsaved parameter edits.
Page Up key	In the parameter structure, click the Page Up key to navigate through the parameters at the current parameter structure.
	When you are editing a parameter, click the Page Up key to increase the current set value.
Page Down key	In the parameter structure, click the Page Down key to navigate through the parameters at the current parameter structure.
	When you are editing a parameter, click the Page Down key to decrease the current set value.
S key	In the parameter structure, click the S key to go to the next level of the current parameter structure.
	After entering the parameter setting, click the S key to start editing the current parameter.
	While you are editing a parameter, click the S key to move the cursor one character to the left.
	While you are editing a parameter, press and hold the S key for more than 1.5 seconds to save the current parameter setting and stop editing the current parameter.

7-segment LED Display

The information on the display can indicate the current status of the device:

HMI display	Operation state	Description
init	1 - Initiate	Initiate the initialization of the device.
nrdy	2 - Not Ready to Switch On	The device enable is not ready to switch on.
dis	3 - Disable	The device enable is disabled.
rdy	4 - Ready to Switch On	The device enable is ready
son	5 - Switch On	The device enable is switching on.
run	6 - Device Enable	The device is enabled / operating mode set is active.
stop	7 - Quick Stop Active	“Quick Stop” is active.
flt	8 - Error Response Active	The device is Error Response active.
flt	9 - Error	Error response is done / power enable is disabled.

When the user attempts to perform an action by clicking the S key, or pressing and holding the S key for more than 1.5 seconds to save a new parameter value, feedback will be given on the display as to whether the current action is successful:

Display	Function description
Flash three times	The new parameter value is saved successfully.
buSy	Drive access rights are busy (e.g. commissioning software).
Rd-oL	This parameter is a read-only parameter and does not support modification.
outr	The new parameter value is beyond the range allowed by this parameter, and saving of the new parameter value is disabled.
Prot	The parameter is locked, and saving of the new parameter value is disabled.
Sv-on	The new parameter value can only be saved if the drive power stage output is not enabled (disabled), and the saving of the new parameter value is disabled.
AdPon	The control loop adjustment mode is adaptive and easy tuning cannot be activated.
noPoW	The drive mains supply is not energized and saving of the new parameter value is disabled.
dEnid	Saving of the new parameter value is denied.

A 5-digit value can be displayed directly on the display. Values exceeding 5 digits can be toggled between 5 displayed digits higher and lower than the value by using the Page Up or Page Down key. When the parameter is in Editing mode, each digit of the value can be selected one by one by clicking the S key.

The display indicates when the value is positive or negative by the first decimal point. A decimal point indicates a negative number.

Example:

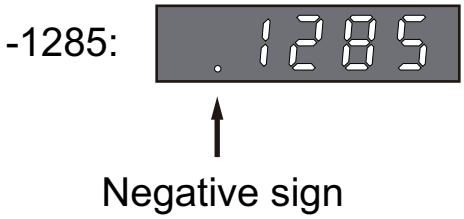

The display indicates the high and low positions of the current display by using the last two decimal points, the last decimal point indicating the low position and the penultimate decimal point indicating the high position.

Example:

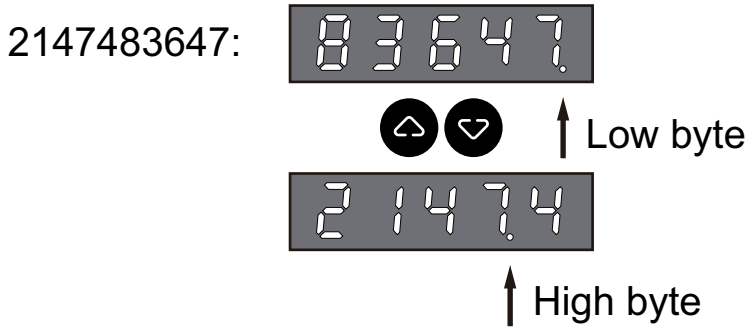

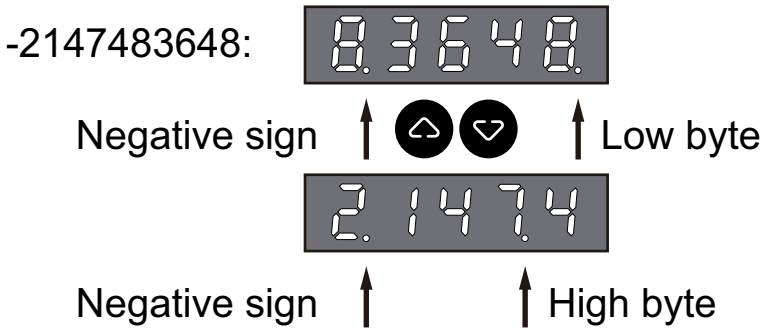

Front Panel Locking

To prevent accidental operation from changing the parameter value settings, the front panel can be placed in a locked state.

P5-00	Lock HMI	Minimum value	0	Unit	Related control mode		
		Factory setting	0	–	P	V / Vz	T / Tz
		Maximum value	1		MS	S	–

Parameter function:	MODBUS address: 14850

Lock HMI

0 / Not Locked / nLoc: HMI not locked

1 / Locked / Loc: HMI locked

The following functions can no longer be started when the HMI is locked:

- Parameter change
- JOG
- Easy Tuning
- Fault Reset

Modified settings become active immediately.

Operation of the Parameter Set OP on the Front Panel

The OP parameter set can be accessed by clicking the S key in the rdy state, or the M key in the Flt state. This parameter set allows manual operation of the drive, including the JOG operation, easy tuning, adaptive control loop parameter operation, and factory reset of the drive.

JOG Operation

The parameter set JOG on the panel allows you to edit and select the velocity and direction of JOG movement, and operate the motor.

- **To set JOG velocity:**

Step	Current display content on the panel	Key used	Operation
0	rdY	M S	Click the S key and the panel displays OP.
1	oP	M S	Click the S key and the panel displays JOG.
2	JGSt	M S	Click the S key and the panel displays JGSt.
3	JoG	M S	Click the Page Up or Page Down key to select the drive's JOG operation or configure JOG parameters.
4	P4-05	M S	Click the S key and the panel displays the current value of the parameter P4-05.
	P4-06		Click the S key and the panel displays the current value of the parameter P4-06.
5	00100.	M S	Click the S key to start editing the parameter, and the first character of the parameter value starts flashing to indicate that it gets the cursor.
6	00100.	M S	Click the Page Up or Page Down key to edit the value of the character that gets the cursor. Each time you click the Page Up key, the value is added by 1, and each time you click the Page Down key, the value is subtracted by 1.
7	00105.	M S	Click the S key to move the cursor from right to left. Each time you click, the cursor is moved to left by 1 character.
8	00105.	M S	Click the Page Up or Page Down key to edit the value of the character that gets the cursor. Each time you click the Page Up key, the value is added by 1, and each time you click the Page Down key, the value is subtracted by 1.
9	00305.	M S >1.5s	Press and hold the S key for more than 1.5 seconds, and then the current parameter value flashes once before fixing, indicating that the current parameter value is saved.
10	00305.	M S	Click the M key to exit the current parameter.
11	P4-05	M S	The panel displays P4-05 and the editing of the parameter value is done.
	P4-06		The panel displays P4-06 and the editing of the parameter value is done.

- **Activate the JOG operation, and run the motor in this step:**

Step	Current display content on the panel	Key used	Operation
0	rdY	M S	Click the S key and the panel displays OP.
1	oP	M S	Click the S key and the panel displays JOG.
2	JoG	M S	Click the S key and the panel displays JGSt.
3	JGSt	M S	Click the S key to activate JOG operation. Now, the drive power stage is on and the drive enters the Enable state.
4	JG- JG= -JG =JG	M S	Click the Page Up or Page Down key to select JOG velocity and direction.
5	JG-	M S	Press and hold the S key and the motor moves in the positive direction at the velocity set in the parameter P4-05. Release the S key to stop the motor movement.
	JG=		Press and hold the S key and the motor moves in the positive direction at the velocity set in the parameter P4-06. Release the S key to stop the motor movement.
	-JG		Press and hold the S key and the motor moves in the positive direction at the velocity set in the parameter P4-05. Release the S key to stop the motor movement.
	=JG		Press and hold the S key and the motor moves in the positive direction at the velocity set in the parameter P4-06. Release the S key to stop the motor movement.
6	JG- JG= -JG =JG	M S	Click the M key at any moment to exit the JOG operation.
7	JoG	–	Current display JOG Now, the drive power stage is off and the drive exits the Enable state.

- **Related parameters**

P4-05	JOG velocity for slow movement.	Minimum value	1	Unit	Related control mode		
		Factory setting	100	usr_v	P	V / Vz	T / Tz
		Maximum value	2147483647		–	S	–
Parameter function:			**MODBUS address: 10504**				
JOG velocity for slow movement. The adjustable value is internally limited to the parameter setting in P4-01. **Modified settings become active immediately.**							

P4-06	JOG velocity for fast movement.	Minimum value	1	Unit	Related control mode		
		Factory setting	200	usr_v	P	V / Vz	T / Tz
		Maximum value	2147483647		–	S	–
Parameter function:			**MODBUS address: 10506**				
JOG velocity for fast movement. The adjustable value is internally limited to the parameter setting in P4-01. **Modified settings become active immediately.**							

Force Output Operation (FCo)

The following operations can be performed with the FCo parameter set:

- Force DO output
- Force analog output

The force output operation method is shown in the following table:

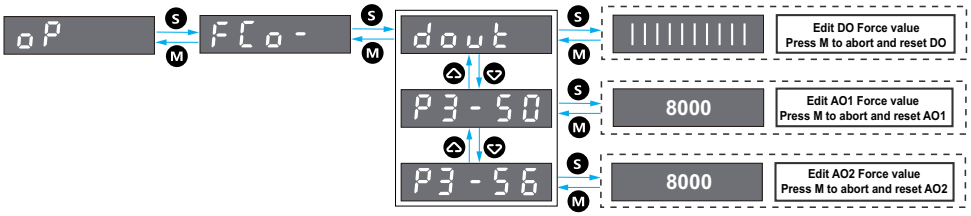

–	IO_LO_ForceMsk	Minimum value	0	Unit	Related control mode		
		Factory setting	0	–	P	V/Vz	T/Tz
		Maximum value	65535		–	S	–
Parameter function:			**MODBUS address: 2106**				
Forced DO picking bit							

–	IO_LO_ForceVal	Minimum value	0	Unit	Related control mode		
		Factory setting	0	–	P	V/Vz	T/Tz
		Maximum value	65535		–	S	–
Parameter function:			**MODBUS address: 2110**				
Forced DO output value							

Easy Tuning

The easy tuning operation of the servo control loop can be active via the parameter set tun on the panel.

Step	Current display content on the panel	Key used	Operation
0	rdY	M ⌃ ⌄ **S**	Click the S key and the panel displays OP.
1	oP	M ⌃ ⌄ **S**	Click the S key and the panel displays JOG.
2	JoG	M **⌃** **⌄** S	Click the Page Up or Page Down key to select tun.
3	tun	M ⌃ ⌄ **S**	Click the S key and the panel displays tuSt.
4	EZYtu	M ⌃ ⌄ **S**	Click the S key and the panel displays EZYtu.
5	tuSt	M ⌃ ⌄ **S**	Click the S key to activate easy tuning. Now, the drive power stage is on and the drive enters the Enable state. The servo motor will make several forward and reverse movements according to the preset program and try to measure the optimal control loop parameters.
6	t 45	–	During the easy tuning operation, the panel will display the auto-tuning progress, expressed as a percentage figure. After the auto-tuning is done, the panel displays donE.
7	donE	M ⌃ ⌄ **S**	Click the S key to save the auto-tuning result. At the same time, the drive power stage is off and the drive exits the Enable state.
8	tun	–	The panel displays tun and the auto-tuning is done.

Operation of the Adaptive Control Loop Parameters

The parameter set Atu displayed on the panel allows you to map the adaptive control loop parameters to the PID control loop parameters in < P1– Gain Setting>. It is also possible to reset the adaptive control loop parameters to their factory settings.

- **To map the adaptive control loop parameters**

Step	Current display content on the panel	Key used	Operation
0	rdY	M ⌃ ⌄ S	Click the S key and the panel displays OP.
1	oP	M ⌃ ⌄ S	Click the S key and the panel displays JOG.
2	JoG	M ⌃ ⌄ S	Click the Page Up and Page Down keys to select Atu.
3	Atu	M ⌃ ⌄ S	Click the S key, and the panel displays cPYA.
4	cPYA	M ⌃ ⌄ S	Click the S key and the panel displays that the characters flash once. Now, the adaptive control loop parameters is mapped to the PID control loop parameters in < P1 - Gain Setting>.
5	cPYA	–	–

- **To reset the adaptive control loop parameters**

Step	Current display content on the panel	Key used	Operation
0	rdY	M ⌃ ⌄ S	Click the S key and the panel displays OP.
1	oP	M ⌃ ⌄ S	Click the S key and the panel displays JOG.
2	JoG	M ⌃ ⌄ S	Click the Page Up and Page Down keys to select Atu.
3	Atu	M ⌃ ⌄ S	Click the S key, and the panel displays cPYA.
4	cPYA	M ⌃ ⌄ S	Click the Page Up or Page Down key to select rStA.
5	rSEA	M ⌃ ⌄ S	Click the S key and the panel displays that the characters flash once. Now, the adaptive control loop parameters is reset to the factory settings.
6	rSEA	–	–

Drive Factory Reset

The drive can be factory reset through the parameter set Frt on the panel:

Step	Current display content on the panel	Key used	Operation
0	rdY	M S	Click the S key and the panel displays OP.
1	oP	M S	Click the S key and the panel displays JOG.
2	JoG	M ▲ ▼ S	Click the Page Up or Page Down key to select Frt.
3	Frt	M S	Click the S key and the panel displays rStF.
4	rStF	M S	Click the S key and the panel displays no.
5	no	M S	Click the S key and the panel displays that the characters begin to flash.
6	no	M ▲ S	Click the Page Up key and the panel displays YES and that the character flashes.
7	YES	M S >1.5s	Press and hold the S key for more than 1.5 seconds, the panel display that the character flashes once and then exits, and the panel displays RESET. Now the drive is restored to factory settings.
8	LArN	M S	Click the S key to put the drive into rdy state.

Restoring Control Loop Parameters to Factory Settings

The control loop parameters of the drive can be restored to factory settings through the parameter set Frt on the panel:

Step	Current display content on the panel	Key used	Operation
0	rdy	M ⌃ ⌄ S	Click the S key and the panel displays OP.
1	oP	M ⌃ ⌄ S	Click the S key and the panel displays JOG.
2	JoG	M ⌃ ⌄ S	Click the Page Up or Page Down key to select Frt.
3	Frt	M ⌃ ⌄ S	Click the S key and the panel displays rStc.
4	rStc	M ⌃ ⌄ S	Click the S key and the panel displays no.
5	no	M ⌃ ⌄ S	Click the S key and the panel displays that the characters begin to flash.
6	no	M ⌃ ⌄ S	Click the Page Up key and the panel displays YES and that the character flashes.
7	YES	M ⌃ ⌄ S >1.5s	Press and hold the S key for more than 1.5 seconds, the panel display that the character flashes once and then exits, and the panel displays rStc. Now the control loop parameters of the drive is restored to factory settings.

Operation of the Parameter Set MON on the Front Panel

When the drive is powered on, status information can be displayed via the display. In addition to the information displayed by default, specific parameter values can be displayed via the parameter set MON. It is also possible to set the content of the information displayed by default at power-up through the parameters.

Displayable Drive Status Information

Current display content	Parameter name	Function description
SuPV	**SuPV**	The default message displayed on the front panel after the drive is powered on.
StAt	**StAt**	The current status of the drive (only appears in SuPV).
PrEP	**PrEP**	Command position, with the unit of the external input pulse used (Inc).
PAcP	**PAcP**	Actual position, with the unit of the external input pulse used (Inc).
PrEF	**PrEF**	Command position, use of internal position computing unit (usr_p)
PAct	**PAct**	Actual position,use of internal position computing unit (usr_p)
Pd.F	**Pdif**	Position deviation, use of internal position computing unit (usr_p)
nrEF	**nrEF**	Command velocity of the motor.
nAct	**nAct**	Actual velocity of the motor.
qrEF	**qrEF**	Command current of the motor (“Q” current for producing torque) (0.01 Arms).
qAct	**qAct**	Actual current of the motor (“Q” current for producing torque) (0.01 Arms).
iAct	**iAct**	Actual total current of the motor (0.01 Arms).
diMo	**diMo**	Drive input point status.
doMo	**doMo**	Drive output point status.
Ai1Mo	**Ai1Mo**	State of analog input channel 1 (mV)
Ai2Mo	**Ai2Mo**	State of analog input channel 2 (mV)
Ao1Mo	**Ao1Mo**	State of analog output channel 1 (mV)

Current display content	Parameter name	Function description
Ao2Mo	**Ao2Mo**	State of analog output channel 2 (mV)
udcA	**udcA**	Current voltage of the drive DC bus (V).
udcr	**udcr**	Usage of the drive DC bus (%) .
PoWM	**PoWM**	Average output power of the drive power stage (W).
LdFP	**LdFP**	Average load factor of the drive power stage (%).
LdFM	**LdFM**	Average load factor of the motor (%).
LdFb	**LdFb**	Average load factor of the braking resistor (%).
oVLP	**oVLP**	Overload rate of the drive power stage (%).
tPS	**tPS**	Temperature of the drive power stage (℃).
tdEV	**tdEV**	Temperature of the drive equipment (℃).
SiGS	**SiGS**	Saved monitoring signal status.
Wrns	**Wrns**	All current warnings grouped in characters (fault level 0).
ErrM	**ErrM**	Drive error history.
oPh	**oPh**	Operation hours of the drive (s).
PoWo	**PoWo**	The power-on number of the drive.
Md00	**Md0**	The value of the internal variable MD0 in S mode.
Md01	**Md1**	The value of the internal variable MD1 in S mode.
Md02	**Md2**	The value of the internal variable MD2 in S mode.

Current display content	Parameter name	Function description
Md03	**Md3**	The value of the internal variable MD3 in S mode.
Md04	**Md4**	The value of the internal variable MD4 in S mode.
Md05	**Md5**	The value of the internal variable MD5 in S mode.
Md06	**Md6**	The value of the internal variable MD6 in S mode.
Md07	**Md7**	The value of the internal variable MD7 in S mode.

ErrM status information list

Current display content	Parameter name	Function description
Lwrn	**Lwrn**	A warning that the current fault level is 0.
LFLt	**LFlt**	An error that the current fault level is 1...4.
Flt1	**Flt1**	A historical error that the level of the first fault stored is 1...4.
Flt2	**Flt2**	A historical error that the level of the second fault stored is 1...4.
Flt3	**Flt3**	A historical error that the level of the third fault stored is 1...4.
Flt4	**Flt4**	A historical error that the level of the fourth fault stored is 1...4.
Flt5	**Flt5**	A historical error that the level of the fifth fault stored is 1...4.
Flt6	**Flt6**	A historical error that the level of the sixth fault stored is 1...4.
Flt7	**Flt7**	A historical error that the level of the seventh fault stored is 1...4.
Flt8	**Flt8**	A historical error that the level of the eighth fault stored is 1...4.
Flt9	**Flt9**	A historical error that the level of the ninth fault stored is 1...4.

P7 - User-defined monitoring parameters

The user can monitor user-defined monitoring parameters in the parameter set MON -> CP-XX:

There are 10 user-defined monitoring parameters CP-00 ... CP-09 available.

By assigning the desired user-defined monitoring parameter address in P7-08 ... P7-17, the desired user-defined monitoring address can be read in MON -> CP-00...CP-09.

Current display content	Parameter name	Modbus address	Function description
CP-00	**CP-00**	7790	User-defined monitoring parameter address 0
CP-01	**CP-01**	7792	User-defined monitoring parameter address 1
CP-02	**CP-02**	7794	User-defined monitoring parameter address 2
CP-03	**CP-03**	7796	User-defined monitoring parameter address 3
CP-04	**CP-04**	7798	User-defined monitoring parameter address 4
CP-05	**CP-05**	7800	User-defined monitoring parameter address 5
CP-06	**CP-06**	7802	User-defined monitoring parameter address 6
CP-07	**CP-07**	7804	User-defined monitoring parameter address 7
CP-08	**CP-08**	7806	User-defined monitoring parameter address 8
CP-09	**CP-09**	7808	User-defined monitoring parameter address 9

Selecting and Displaying Drive Status Information

Select and display the drive status information via the parameter set MON.

Step	Current display content on the panel	Key used	Operation
0	rdy	M S	Click the S key and the panel displays OP.
1	oP	M S	Click the S key and the panel displays MON.
2	Mon	M S	Click the S key and the panel displays SuPV.
3	SuPV	M S	Click the Page Up or Page Down key to select the drive status information, see Displayable Drive Status Information, page 143.
4	nAct	M S	Click the S key and the panel displays the corresponding drive status information.
5	00 100.	–	–

Setting the Default Status Information Displayed after Drive Power-on

Set the default status information displayed after drive power-on via the parameter set **MON > StAt** on the panel.

Step	Current display content on the panel	Key used	Operation
0	rdY	M ⌃ ⌄ **S**	Click the S key and the panel displays OP.
1	oP	M ⌃ ⌄ **S**	Click the S key and the panel displays MON.
2	Mon	M ⌃ ⌄ **S**	Click the S key and the panel displays SuPV.
3	SuPV	M ⌃ ⌄ **S**	Click the S key and the panel displays StAt.
4	StAt	M ⌃ ⌄ **S**	Click the S key to edit the parameter. Now the panel displays that the character begins to flash.
5	StAt	M **⌃** **⌄** S	Click the Page Up or Page Down key to select the drive status information, seeDisplayable Drive Status Information, page 143.
6	mAct	M ⌃ ⌄ **S** >1.5s	Press and hold the S key for more than 1.5 seconds, the panel displays that the character flashes once before fixing, indicating that the current parameter value is saved.
7	mAct	**M** ⌃ ⌄ S	Click the S key multiple times to return to the previous menu till the panel displays the corresponding drive status information.
8	00100.	–	The drive status information selected in step 6 is also displayed by default when the drive is powered on.

Displaying the Drive's Current/Historical Fault Records

The parameter set **MON > ErrM** on the panel allows to display the drive's current/historical fault information:

- Run the parameter **MON > ErrM > LWrn** to display a warning that the fault level is 0.
- Run the parameter **MON > ErrM > LFlt** to display an error that the fault level is 1...4.
- Run the parameter **MON > ErrM > Fltn** to display a historical error that a fault level displayed dynamically in the order of the occurrence of the fault is 1...4. Up to the first 9 historical errors are recorded, and the historical errors with higher n-number appear earlier.

Step	Current display content on the panel	Key used	Operation
0	rdy	M ⌃ ⌄ **S**	Click the S key and the panel displays OP.
1	oP	M ⌃ ⌄ **S**	Click the S key and the panel displays MON.
2	Mon	M ⌃ ⌄ **S**	Click the S key and the panel displays SuPV.
3	SuPV	M **⌃** **⌄** S	Click the Page Up or Page Down key to select the drive status information till the panel displays ErrM.
4	ErrM	M ⌃ ⌄ **S**	Click the S key to go to the fault record parameter set.
5	LWrn LFLt FLt1 FLt2 FLt9	M **⌃** **⌄** S	Click the Page Up or Page Down key to select the drive's current/historical fault records.
6	FLt1	M ⌃ ⌄ **S**	Click the S key and the panel displays the content of the drive's selected current/historical fault records.
7	A320	–	–

Monitoring the Drive’s I/O Point Status Information

This device comes with functionally configurable input and output points.

The signal status of the input and output points can be monitored via the device's integrated HMI, but only the monitoring function is provided, and the status of the input and output points cannot be modified.

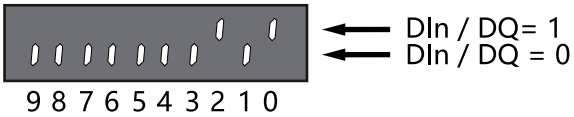

Input point:

- Go to the parameter set **MON > diMo** on the panel.

  The status of the input points is presented in bit-coded form.

Bit	Input point
0	DI0
1	DI1
2	DI2
3	DI3
4	DI4
5	DI5
6	DI6
7	DI7
8	DI8
9	DI9

Output point:

- Go to the parameter set **MON > doMo** on the panel.

  The status of the output points is presented in bit-coded form.

Bit	Output point
0	DQ0
1	DQ1
2	DQ2
3	DQ3
4	DQ4
5	DQ5

Operation of the Parameter Set Conf on the Front Panel

Setting and Operating Numeric Parameters

When setting numeric parameters, you can edit the parameter value separately for each digit of the parameter.

Here is an example of setting numeric parameter P1-00:

Step	Current display content on the panel	Key used	Operation
0	rdy	M ⌃ ⌄ **S**	Click the S key and the panel displays OP.
1	oP	M **⌃** **⌄** S	Click the Page Up or Page Down key to select Conf.
2	ConF	M ⌃ ⌄ **S**	Click the S key and the panel displays P0.
3	P0	M **⌃** **⌄** S	Click the Page Up or Page Down key to select P1.
4	P1	M ⌃ ⌄ **S**	Click the S key and the panel displays Parameter P1-00.
5	P1-00	M ⌃ ⌄ **S**	Click the S key and the panel displays the current value of the parameter P1-00.
6	00212	M ⌃ ⌄ **S**	Click the S key to start editing the parameter, and the first character of the parameter value starts flashing to indicate that it gets the cursor.
7	00212	M ⌃ ⌄ **S**	Click the S key to move the cursor from right to left. Each time you click, the cursor is moved to left by 1 character.
8	00212	M **⌃** **⌄** S	Click the Page Up or Page Down key to edit the value of the character that gets the cursor. Each time you click the Page Up key, the value is added by 1, and each time you click the Page Down key, the value is subtracted by 1.
9	00312	M ⌃ ⌄ **S** >1.5s	Press and hold the S key for more than 1.5 seconds, and then the current parameter value flashes once before fixing, indicating that the current parameter value is saved.
10	00312	**M** ⌃ ⌄ S	Click the M key to exit the current parameter.
11	P1-00	–	The panel displays P1-00 and the editing of the parameter value is done.

Setting and Operating Selective Parameters

When setting a selective parameter, you need to make a selection in its option list.

Here is an example of setting the selective parameter P0-10:

Step	Current display content on the panel	Key used	Operation
0	rdy	M ⌃ ⌄ **S**	Click the S key and the panel displays OP.
1	oP	M **⌃** **⌄** S	Click the Page Up or Page Down key to select Conf.
2	Conf	M ⌃ ⌄ **S**	Click the S key and the panel displays P0.
3	P0	M ⌃ ⌄ **S**	Click the S key and the panel displays Parameter P0-00.
4	P0-00	M **⌃** **⌄** S	Click the Page Up or Page Down key to select P0-10.
5	P0-10	M ⌃ ⌄ **S**	Click the S key and the panel displays the current value of the parameter P0-10.
6	10000	M ⌃ ⌄ **S**	Click the S key to edit the parameter. Now the current value begins to flash.
7	10000	M **⌃** **⌄** S	Click the Page Up and Page Down key to make a selection in the option list of the current parameter.
8	5000	M ⌃ ⌄ **S** >1.5s	Press and hold the S key for more than 1.5 seconds, and then the current parameter value flashes once before fixing, indicating that the current parameter value is saved.
9	5000	**M** ⌃ ⌄ S	Click the M key to exit the current parameter.
10	P0-10	–	The panel displays P0-10 and the editing of the parameter value is done.

Warm Starting the Drive from the Front Panel

When the drive is not in the Enable state, the drive can be warm-started from the front panel:

Step	Current display content on the panel	Key used	Operation
0	rdy	M S >2.5s	When the drive is not in the Enable state, press and hold both the M and S keys for more than 2.5 seconds. Now the panel displays Warm, indicating that the drive is ready to warm start.
1	WArn	–	Release both the M and S keys to restart the drive.
2	rdy	–	The panel displays rdy, indicating that the drive is ready.

Operation

Access Channels

Overview of the Access Channels

Lexium18 series servo drives have a concept of access channels. They can be accessed via different types of access channels.

Access channels for the product are:

- Integrated HMI front panel:
- Modbus series interface:
- Commissioning software
- Digital input signal

⚠WARNING

UNINTENDED MOVEMENT

- Verify that simultaneous access via multiple access channels cannot cause unintended triggering or blocking of commands.
- Verify that the use of exclusive access cannot cause unintended triggering or blocking of commands.
- Verify that the required access channels are available.

Failure to follow these instructions can result in death, serious injury, or equipment damage.

Exclusive Access Channels

Lexium 18 series servo drives can be accessed via exclusive channels. Only one channel can have access to the product when an exclusive channel is used. Only one access channel can have exclusive access to this product at any one time.

The exclusive access channels for this product include:

- Integrated HMI front panel:

  The JOG operation or easy tuning can be performed via the integrated HMI front panel.
- Modbus series interface:

  Setting specific internal parameters of the drive through the Modbus serial interface allows the Modbus serial interface to gain exclusive access to the device.
- Commissioning software:

  The commissioning software receives exclusive access by setting the control button in position ON.

When the drive is powered on, there is no exclusive access via an access channel.

Operating State of the Device

When the Lexium 18 series servo drives are powered on and a certain operating mode is activated, the product will go through a series of changes in operating state.

State Diagram

The operating states of the product and the transitional relationship between states are plotted in the followingState Diagram (state machine).

The monitoring function monitors and influences the device's operating state internally.

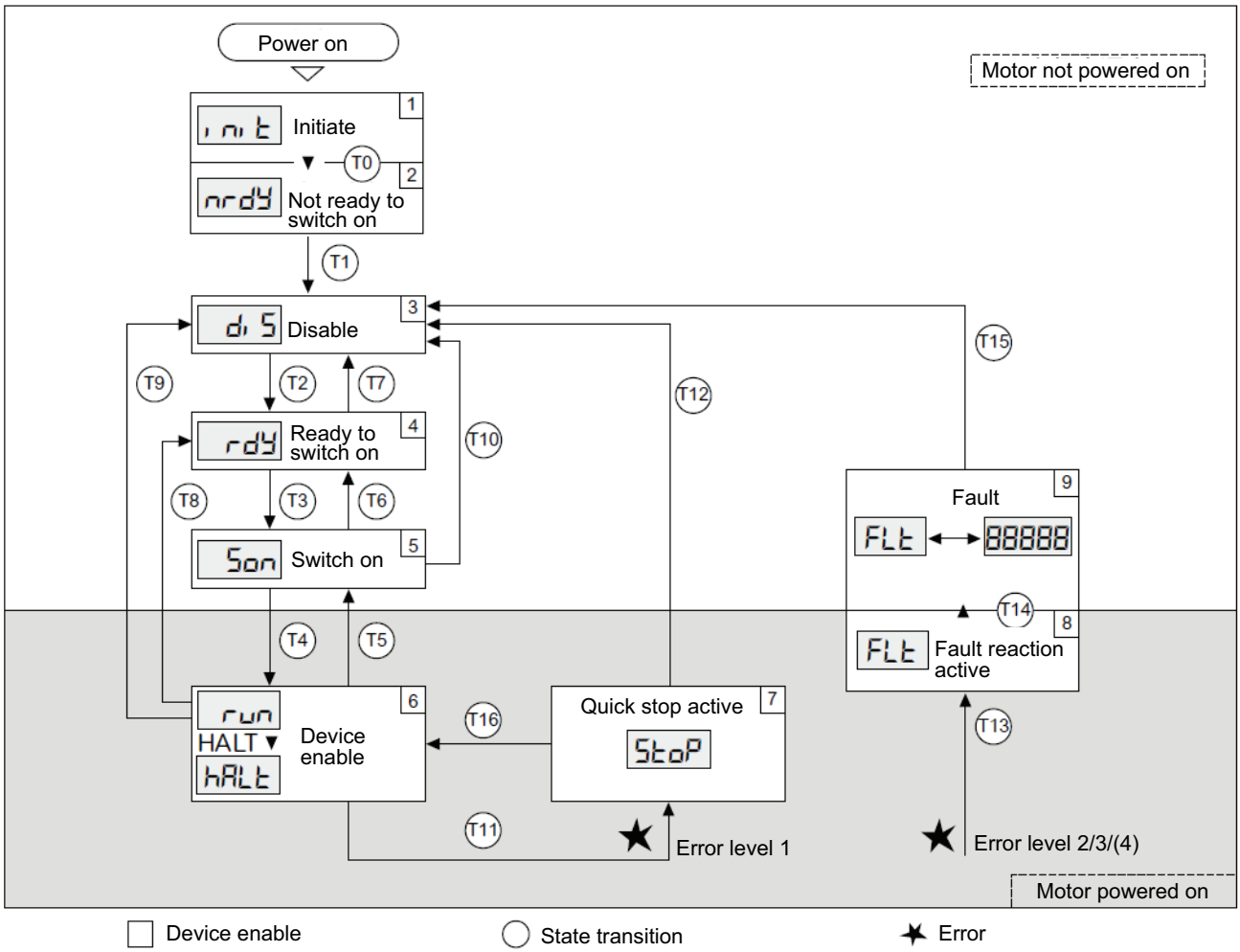

Definition of the Operating State

HMI display	Operation state	Description
init	1 - Initiate	Initiate the initialization of the device
nrdy	2 - Not Ready to Switch On	The device enable is not ready to switch on.
dis	3 - Disable	The device enable is disabled.
rdy	4 - Ready to Switch On	The device enable is ready.
son	5 - Switch On	The device enable is switching on.
run	6 - Device Enable	The device enable is enabled / operating mode set is active.
stop	7 - Quick Stop Active	“Quick Stop” is active.
flt	8 - Error Response Active	The device is error response active
flt	9 - Error	Error response is done / device enable is disabled.

Error class

In the event of an error, the product will respond to it, depending on its severity. The response will be based on the following error levels:

Error class:	Response	Meaning
0	WARNING	The monitoring function recognizes a problem. The operation was not halted.
1	“Quick stop”	Stop the motor through the setting "Quick Stop" and keep the output level enabled.
2	“Quick Stop” by cutting off	Stop the motor through the setting "Quick Stop" and keep the output stage disabled when the operation stops.
3	Fatal failure	Disable the output stage without pre-stopping the motor.
4	Loss of control.	Disable the output stage without pre-stopping the motor. The error can only be reset by shutting down the device.

Definition of State Transitions

A state transition of the device can be triggered via the integrated HMI operator front panel, an input signal or a reaction to a monitoring function.

State transition	Device state	Switching conditions/events*	Response
T0	1→2	• Device initialization successful	
T1	2→3	• Parameter initialization successful	
T2	3→4	• That main input voltage too low doesn't exist • Encoder initialization successful • Motor standstill	
T3	4→5	• Request for device enable	
T4	5→6	• Automatic transition	• Request for device enable • Check user parameters • Switch on the motor holding brake (if any)
T5	6→5	N/A	
T6	5→4	N/A	
T7	4→3	• Main input voltage too low • Actual speed of rotation of the motor > 1000 rpm (e.g. driven by external force)	
T8	6→4	N/A	
T9	6→3	• Request for switching off device enable	• Cancel movements via a "Halt" command or immediately switch off the device enable • Switch off the motor holding brake (if any)
T10	5→3	• Request for switching off device enable	• Request for switching off device enable
T11	6→7	• Faults of error class 1 • The commissioning software gives a "Quick Stop" command.	• Cancel motion via "Quick Stop"
T12	7→3	• Request for switching off device enable	• Switch off the power stage immediately even if the device's "Quick Stop" is still enabled.
T13	x→8	• Faults of error class 2, 3, and 4	• Error response to be made
T14	8→9	• End of error response (error class 2) • Faults in error classes 3 and 4	
T15	9→3	• "Reset fault" operation	• Attempt to reset fault (the cause of the fault must be eliminated first)
T16	7→6	• "Reset fault" operation	• If the "Quick Stop" is triggered by a fault in error class 1, reset fault allows to return directly to the operating state "6 - Device Enable".
*: Any condition that is met will trigger a state transition.			

Input and Output Settings

The input and output functions of the Lexium18 servo drives can be configured via the parameters.

Connection Methods

When connecting the input points:

- Switch and relay contacts can be used, or transistors with open collector outputs can be used.
- For all input points, use a bidirectional optocoupler structure. Select the mains supply logic connected to the common terminal of the input according to the actual external circuit.
- To ensure sufficient current on the primary side of the optocoupler and protect the primary side of the optocoupler at the same time, ensure that the upper and lower voltage limits of the input points are kept between 12Vdc-15% and 24Vdc+15%.

This is an example of typical input connection:

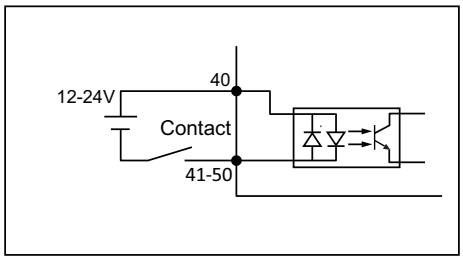

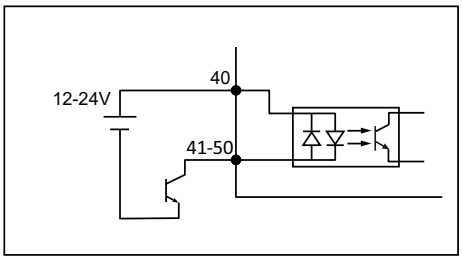

When connecting the output points:

- The point is an open-collector transistor-driven output, which can be connected to a load such as a relay coil or an optocoupler.
- When connecting inductive loads, you can use an appropriate external protection circuit or device (such as a flyback diode) to avoid possible damage to the device.
- When connecting an optocoupler load, take care to select the appropriate current-limiting resistor according to the connected mains supply. For a recommended value of 10mA for the primary side current of the optocoupler, use the formula shown in the figure below to calculate the resistance value.
- All output point transistors are structured with an independent collector and a common emitter. Also, pay attention to the mains supply polarity for connection. The common terminal of the output point should be connected to the negative terminal of the mains supply. Connection with a reverse polarity will damage the device.
- Pay attention to the maximum current load capacity of the output point transistors. Ensure that the output point load current does not exceed 100 mA (at 50°C).

This is an example of typical output connection:

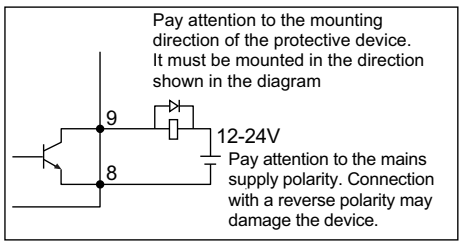

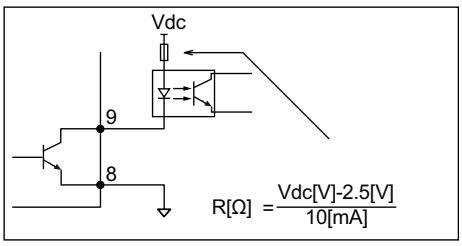

Setting Methods of I/O Parameters

The functions of the input points DI0...DI11 are configured by the parameters P3-00...P3-11, while those of the output points DQ0...DQ6 are configured with the parameters P3-24...P3-30.

An I/O function can be configured to only one I/O point at the same time.

The following diagram shows how the I/O point parameters are set:

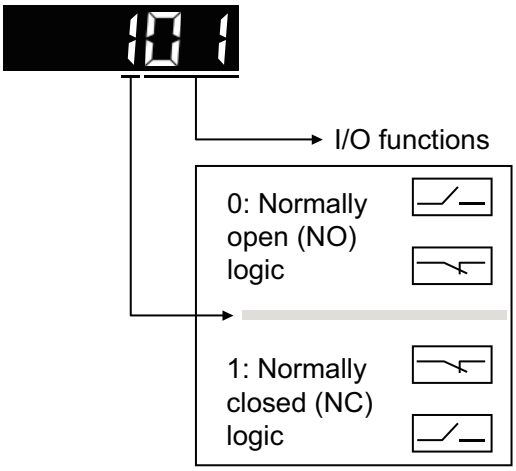

⚠ WARNING

UNINTENDED MOVEMENT

- Start the system only if there is no person or obstruction in the zone of operation.
- Verify that the connection complies with the setting requirements.
- Carefully run tests for all operating states and potential error situations when commissioning, upgrading or otherwise modifying the operation of the drive.

Failure to follow these instructions can result in death, serious injury, or equipment damage.

List of Input Functions

The table below is an overview of available input functions:

Input point name	CN1 pin no.	Parameters
IOfunct_DI0	41	P3-00
IOfunct_DI1	42	P3-01
IOfunct_DI2	43	P3-02
IOfunct_DI3	44	P3-03
IOfunct_DI4	45	P3-04
IOfunct_DI5	46	P3-05
IOfunct_DI6	47	P3-06
IOfunct_DI7	48	P3-07
IOfunct_DI8	49	P3-08
IOfunct_DI9	50	P3-09
DI_COM	40	-
(IOfunct_DI10)*	16	P3-10
	20	
(IOfunct_DI11)*	17	P3-11
	21	

* DI10 and DI11 multiplex two 24Vdc open collector pulse input channels, and the functions need to be parameterized.

Function name	Function description	Function value		Related control mode				
		Normally open	Normally closed	P	S	V / Vz	T / Tz	MS
Freely Available	Not assigned	1	–	√	√	√	√	√
Fault Reset	Fault reset	2	102	√	√	√	√	√
Enable	Driver is enabled	3	103	√	√	√	√	√
Halt	Halt	4	104	√	√	√	√	√
Current Limitation	Starting current limitation	6	106	√	√	√	√	√
Zero Clamp	Zero clamp	7	107	–	√	√	–	√
Velocity Limitation	Starting velocity limitation	8	108	√	√	√	√	√
JOG Positive	Jog positive	9	109	√	–	–	–	√
JOG Negative	Jog negative	10	110	√	–	–	–	√
JOG Fast/Slow	JOG velocity switching:	11	111	√	–	–	–	–
Gear Ratio Switch	Electronic gear ratio switch	12	112	√	–	–	–	–
Start Single Data Set	Start single data set	13	113	–	–	–	–	√
Data Set Select	Select target data set	14	114	–	–	–	–	√
Data Set Bit 0	Select data set Bit 0	15	115	–	–	–	–	√
Data Set Bit 1	Select data set Bit 1	16	116	–	–	–	–	√
Data Set Bit 2	Select data set Bit 2	17	117	–	–	–	–	√
Data Set Bit 3	Select data set Bit 3	18	118	–	–	–	–	√
Gear Offset 1	First electronic gear offset	19	119	√	–	–	–	–
Gear Offset 2	Second electronic gear offset	20	120	√	–	–	–	–
Reference Switch (REF)	Reference switch	21	121	√	√	–	–	√
Positive Limit Switch (LIMP)	Positive limit switch	22	122	√	√	√	√	√
Negative Limit Switch (LIMN)	Negative limit switch	23	123	√	√	√	√	√
Switch Controller Parameter Set	Switch of controller parameter set	24	124	√	√	√	√	√
Operating Mode Switch	Operating mode switch	27	127	√	–	√	√	–
Velocity Controller Integral Off	Deactivate the velocity controller integral	28	128	√	√	√	–	√
Start Motion Sequence	Start motion sequence	29	129	–	–	–	–	√
Start Signal of RMAC	Start signal of RMAC	30	130	√	–	√	√	–
Active RMAC	Enable RMAC	31	131	√	–	√	√	–
Active Operating Mode	Enable the operating mode	32	132	√	–	√	√	–
Data Set Bit 4	Select data set Bit 4	35	135	–	–	–	–	√
Inversion AI1	Turn on Inversion AI1	25	125	–	–	√	√	–
Inversion AI2	Turn on Inversion AI2	26	126	–	–	√	√	–
Homing	Homing function	42	142	√	√	√	√	√
CCLR	Clear position deviation	43	143	√	–	–	–	–
INTVCM0	Selection of velocity with internal command 0	44	144	–	–	√	–	–

Function name	Function description	Function value		Related control mode				
		Normally open	Normally closed	P	S	V / Vz	T / Tz	MS
INTVCM1	Selection of velocity with internal command 1	45	145	–	–	√	–	–
INTVCM2	Selection of velocity with internal command 2	46	146	–	–	√	–	–
INTTCM0	Selection of torque with internal command 0	47	147	–	–	–	√	–
INTTCM1	Selection of torque with internal command 1	48	148	–	–	–	√	–
INTTCM2	Selection of torque with internal command 2	49	149	–	–	–	√	–
INHP	Input pulse suppression	50	150	√	–	–	–	–

List of Output Functions

The table below is an overview of available output functions:

Output point name	CN1 pin no.	Parameters
IOfunct_DQ0	8	P3-24
	9	
IOfunct_DQ1	10	P3-25
	11	
IOfunct_DQ2	12	P3-26
	13	
IOfunct_DQ3	14	P3-27
	15	
IOfunct_DQ4	36	P3-28
	37	
IOfunct_DQ5	38	P3-29
	39	
IOfunct_DQ6(OCZ)*	34	P3-30
	35	

*: By default, DQ6 is used for motor zero signal open collector outputs, but it can also be configured to other output functions by the parameter P3-30.

Function name	Function description	Function value		Related control mode				
		Normally open	Normally closed	P	S	V / Vz	T / Tz	MS
Freely Available	Not assigned	1	–	√	√	√	√	√
No Error	Driver has no fault	2	102	√	√	√	√	√
Active	Driver is enabled	3	103	√	√	√	√	√
RMAC Active or Finished	RMAC mode is active or finished	4	104	√	–	√	√	–
In Position Deviation Window	In position deviation window	5	105	√	√	–	–	√
In Velocity Deviation Window	In velocity deviation window	6	106	–	√	√	–	√
Velocity Below Threshold	Velocity is below threshold	7	107	√	√	√	√	√
Torque Below Threshold	Torque is below threshold	8	108	√	√	√	√	√
Halt Acknowledge	Halt is acknowledged	9	109	√	√	√	√	√
Motion Sequence: Start Acknowledge	Motion Sequence: Start is acknowledged	11	111	–	–	–	–	√
Motor Standstill	Motor at a standstill state (actual velocity < 9 rpm)	13	113	√	√	√	√	√
Selected Error	There is one of the errors specified in Error Class 1...4	14	114	√	√	√	√	√
Valid Reference (ref_ ok)	Reference is set (ref_ok)	15	115	√	√	√	√	√
Selected Warning	There is one of the warnings specified in Error Class 0	16	116	√	√	√	√	√
Motion Sequence: Done	Motion Sequence is completed	17	117	–	–	–	–	√
Motor Moves Positive	Motor moves in a positive direction	22	122	√	√	√	√	√
Motor Moves Negative	Motor moves in a negative direction	23	123	√	√	√	√	√
Release Brake	Holding brake control	24	124	√	√	√	√	√
Torque Below Threshold	Motor torque is above threshold	25	125	√	√	√	√	√
Motor Index	Motor Z-phase pulse	26	126	√	√	√	√	√
In Position Deviation Window2	Within position deviation range	27	127	√	√	–	–	√
Target Position Reached	Target position is reached	28	128	–	√	–	–	√
Target Velocity Reached	Target velocity is reached	29	129	√	√	√	–	√
Target Torque Reached	Target torque is reached	30	130	–	–	–	√	–
Velocity Over Threshold	Motor velocity is above threshold	31	131	√	√	√	√	√
Setting can only be modified if power stage is disabled. **Modified settings become active the next time the product is powered on.**								

Factory Settings for I/O Functions

The Lexium 18 servo drives are delivered from the factory with default I/O functions assigned to them, or the user can reassign them at will to suit their needs.

The table below shows the factory settings for the input functions:

Input point	Related control mode				
	P	V / Vz	T / Tz	MS	S
DI0	3 Driver is enabled	3 Driver is enabled	3 Driver is enabled	3 Driver is enabled	3 Driver is enabled
DI1	2 Fault reset	2 Fault reset	2 Fault reset	2 Fault reset	2 Fault reset
DI2	122 Positive limit switch	122 Positive limit switch	122 Positive limit switch	122 Positive limit switch	122 Positive limit switch
DI3	123 Negative limit switch	123 Negative limit switch	123 Negative limit switch	123 Negative limit switch	123 Negative limit switch
DI4	104 Halt	104 Halt	104 Halt	104 Halt	104 Halt
DI5	12 Electronic gear ratio switch	7 Zero clamp	7 Zero clamp	7 Zero clamp	1 Not assigned
DI6	6 Inrush current limitation	6 Inrush current limitation	8 Velocity limitation	13 Start single data set	1 Not assigned
DI7	24 Switch of controller parameter set	44 Selection of velocity with internal command 0	47 Selection of torque with internal command 0	15 Select data set Bit 0	1 Not assigned
DI8	43 Clears the position error	45 Selection of velocity with internal command 1	48 Selection of torque with internal command 1	16 Select data set Bit 1	1 Not assigned
DI9	27 Operating mode switch	46 Selection of velocity with internal command 2	49 Selection of torque with internal command 2	17 Select data set Bit 2	1 Not assigned
DI10	1 Not assigned	1 Not assigned	1 Not assigned	1 Not assigned	1 Not assigned
DI11	1 Not assigned	1 Not assigned	1 Not assigned	1 Not assigned	1 Not assigned

The table below shows the factory settings for the output functions:

Output point	Related control mode				
	P	**V / Vz**	**T / Tz**	**MS**	**S**
DQ0	2 Driver has no fault	2 Driver has no fault	2 Driver has no fault	2 Driver has no fault	2 Driver has no fault
DQ1	3 Driver is enabled	3 Driver is enabled	3 Driver is enabled	3 Driver is enabled	3 Driver is enabled
DQ2	13 Motor standstill	13 Motor standstill	13 Motor standstill	13 Motor standstill	13 Motor standstill
DQ3	5 In position deviation window	6 In velocity deviation window	6 In velocity deviation window	11 Motion Sequence: Start is acknowledged	5 In position deviation window
DQ4	25 Motor torque is above threshold	25 Motor torque is above threshold	25 Motor torque is above threshold	17 Motion Sequence is completed	25 Motor torque is above threshold
DQ5	24 Holding brake control	24 Holding brake control	24 Holding brake control	24 Holding brake control	24 Holding brake control
DQ6	26 Motor Z-phase pulse	26 Motor Z-phase pulse	26 Motor Z-phase pulse	26 Motor Z-phase pulse	26 Motor Z-phase pulse

Parameterization of Software Filtering for Signal Inputs

Signal input filtering comprises hardware filtering and software filtering. Hardware filtering time is permanently set, while software filtering time can be parameterized.

When a set signal function is modified, software filtering is reset to the factory setting on the next power cycle.

P3-12 … P3-23	Debounce time of DIx	Minimum value	0	Unit	Related control mode		
		Factory setting	6	-	P	V / Vz	T / Tz
		Maximum value	22		MS	S	-

Parameter function:	MODBUS address: -

Debounce time of DI0

0 / No: No software Filtering

1 / 0.25 ms

2 / 0.50 ms

3 / 0.75 ms

4 / 1.00 ms

5 / 1.25 ms

6 / 1.50 ms

14 / 1.75 ms

15 / 2 ms

16 / 4 ms

17 / 6 ms

18 / 8 ms

19 / 10 ms

20 / 12 ms

21 / 14 ms

22 / 16 ms

Setting can only be modified if power stage is disabled.

Modified settings become active immediately.

Setting of Basic Operating Functions

Incorrect parameter settings will cause unexpected equipment operation, signal triggering, component damage, or monitoring functions to be disabled. The setting of some parameters must be powered down and restarted before the device will take effect.

⚠ WARNING

UNINTENDED MOVEMENT

- Start the system only if there is no person or obstruction in the zone of operation.
- Do not operate the drive system with undetermined parameter values or data.
- Never modify a parameter value unless you fully understand the parameter and all effects of the modification.
- Restart the drive and verify the saved operational data and/or parameter values after modifications.
- Carefully run tests for all operating states and potential error situations when commissioning, upgrading or otherwise modifying the operation of the drive.
- Verify the functions after replacing the product and also after making modifications to the parameter values and/or other operational data.

Failure to follow these instructions can result in death, serious injury, or equipment damage.

Servo Enable

You can set the method used to control the servo drive's power stage activation / deactivation.

When a servo enable request is given by a signal that meets the setting requirements, the power stage of the device is activated and the device is in the enable state. When a request to deactivate servo enable is given, the power stage of the device is deactivated and the device is disabled.

When there are faults in error classes 2, 3, and 4, the device automatically enables the power stage and disables the Enable function.

With the factory settings, the input terminal IOfunc_DI0 on CN1 pin 41 is set to the Enable function (NO logic). It is also possible to assign the Enable function to other input terminals via the parameters P3-00...P3-11.

P3-00 … P3-11	Function of the input point DIx	Minimum value	1	Unit	Related control mode		
		Factory setting	–	–	P	V / Vz	T / Tz
		Maximum value	150		MS	S	–

Parameter function: **MODBUS address: -**

Function of the input point DIx

Function description	Function value		Related control mode				
	Normally open	Normally closed	P	S	V / Vz	T / Tz	MS
Driver is enabled	3	103	√	√	√	√	√

Setting can only be modified if power stage is disabled.

Modified settings become active the next time the product is powered on.

The Enable signal logic of the device can be set via the parameter P3-57: the rising edge of the signal or the high level of the signal is used to activate the device enable.

It is also possible to use the parameter P3-57 to keep the device in the Enable state.

With the factory settings, the device enable is activated using the rising edge of the signal.

P3-57	Enabling the power stage at PowerOn.	Minimum value	0	Unit	Related control mode		
		Factory setting	0	–	P	V / Vz	T / Tz
		Maximum value	2		MS	S	–

Parameter function: **MODBUS address: 1292**

Enabling the power stage at PowerOn.

0 / RisingEdge /: A rising edge with the signal input function "Enable" enables the power stage.

1 / HighLevel /: An active signal input with signal input function "Enable" enables the power stage.

2 / AutoOn /: The power stage is automatically enabled.

Modified settings become active the next time the motor moves.

The parameter P3-58 can be used to set the drive to restart the power stage after resetting a device fault.

When the parameter P3-58 is set to 1, the device's Auto On set in P3-57 is valid after both device power-on and fault reset. Even though the device automatically disables the power stage due to a resettable fault, it will automatically restart the power stage and return it to the operating state as soon as the fault reset is performed.

⚠ WARNING

UNINTENDED MOVEMENT

- Do not perform a fault reset with a position command input.
- Before performing a fault reset, be sure to check and take the necessary safety precautions.

Failure to follow these instructions can result in death, serious injury, or equipment damage.

P3-58	Enabling the power stage as set via IO_ AutoEnable even after error.	Minimum value	0	Unit	Related control mode		
		Factory setting	0	–	P	V / Vz	T / Tz
		Maximum value	1		MS	S	–

Parameter function: **MODBUS address: 1288**

Enabling the power stage as set via IO_ AutoEnable even after error.

0 / Off /: Setting in parameter IO_ AutoEnable is only used after start-up.

1 / On /: Setting in parameter IO_AutoEnable is used after start-up and after detected error.

Modified settings become active the next time the motor moves.

NOTE: If the device is set to be always enabled, it will enable the power stage and enter the operable state as soon as the mains supply is powered on. Now, in the state with a position command input, it may cause an unexpected equipment operation. Therefore, before powering on the device, be sure to check and take the necessary safety precautions.

⚠ WARNING

UNINTENDED MOVEMENT

- Start the system only if there is no person or obstruction in the zone of operation.
- Do not operate the drive system with undetermined parameter values or data.
- Never modify a parameter value unless you fully understand the parameter and all effects of the modification.
- Restart the drive and verify the saved operational data and/or parameter values after modifications.
- Carefully run tests for all operating states and potential error situations when commissioning, upgrading or otherwise modifying the operation of the drive.
- Verify the functions after replacing the product and also after making modifications to the parameter values and/or other operational data.

Failure to follow these instructions can result in death, serious injury, or equipment damage.

Selection of the Direction of Rotation of the Motors

The direction of rotation of the servo motor can be reversed without changing the wiring of the position command input or the polarity of the position command (command direction) by modifying the setting value of the parameter P0-06. In this case, although the direction of rotation of the servo motor is reversed, the polarity of the output signal from the device, such as the analog encoder pulse output of the servo drive, is not changed.

With the factory settings, the positive direction of rotation is set to “counterclockwise rotation (CCW)” of the shaft of the servo motor when viewed from the output shaft of the servo motor.

P0-06	**Motor rotation direction setting**	**Minimum value**	**0**	**Unit**	**Related control mode**		
		Factory setting	**0**	**–**	**P**	**V / Vz**	**T / Tz**
		Maximum value	**1**		**MS**	**S**	**–**
Parameter function:			**MODBUS address: 1560**				
Motor rotation direction setting 0 / Inversion Off: Disable the inversion of the direction of rotation of the motor. 1 / Inversion On: Enable the inversion of the direction of rotation of the motor. **Setting can only be modified if power stage is disabled.** **Modified settings become active immediately.**							

Absolute System

NOTE: Absolute encoders require a battery compartment.

Absolute system configuration

The absolute encoder detects both the position of the motor within one revolution and counts the number of revolutions, with a single-turn resolution of 8,388,608 (2^{23}) and the capability to store 16-bit multi-turn data.

Absolute mode is available in position, velocity, and torque control modes. When the servo drive is powered off, the encoder data is backed up by a battery. Upon power-up, the servo drive calculates the mechanical absolute position based on the encoder's absolute position data, eliminating the need for repeated mechanical origin reset operations.

NOTICE

- When modifying P0-06 (Rotation Direction Selection), P6-47 (Encoder Reset), or the mechanical gear ratio, the mechanical position undergoes abrupt changes, necessitating an origin return operation.
- When using the servo drive's internal origin return function, upon completion of the origin return, the servo drive automatically calculates the deviation between the mechanical absolute position and the encoder absolute position, and stores this value in the servo drive's EEPROM.

- Absolute system configuration

  When connecting the drive to an absolute value motor, check the P6-40 setting to determine whether it is a single-turn or multi-turn application.

  Related parameters:

P6-40	Fault masking	Minimum value	0	Unit	Related control mode		
		Factory setting	4224	–	P	V / Vz	T / Tz
		Maximum value	4294967295		MS	S	–

Parameter function: **MODBUS address: 16148**

Fault masking

Parameter value	Bit	Description	Related error number	Function	
L XXXX[]	0	Reserved	–	–	–
	1	Reserved	–	–	–
	2	Reserved	–	–	–
	3	Reserved	–	–	–
L XXX[]X	4	Reserved	–	–	–
	5	Reserved	–	–	–
	6	Reserved	–	–	–
	7	Drive power stage or motor overload (I^2T)	4102 4302	0	The current output of the drive power stage is limited in the event of an overload (I^2T)
				1	The error 4102 or error 4302 of error class 3 is triggered in the event of an overload (I^2T)
L XX[]XX	8	Reserved	–	–	–
	9	DC bus under-voltage	3201 3202	0	The error number 3201 or the error number 3202 is not stored in the failure history storage area of the device
				1	The error number 3201 or the error number 3202 is stored in the failure history storage area of the device
	10	Reserved	–	–	–
	11	Reserved	–	–	–
L X[]XXX	12	Multi-turn absolute encoder undervoltage warning	7634 7635	0	Connect the battery, and the connected motor functions as a multi-turn absolute encoder motor.
			–	1	Shield the battery, and the connected motor functions as an incremental motor.
	13	Input phase loss alarm	3207	0	Input phase loss alarm activated
			–	1	Input phase loss alarm suppression
	14	Reserved	–	–	–

P6-40	Fault masking	Minimum value	0	Unit	Related control mode		
		Factory setting	4224	–	P	V / Vz	T / Tz
		Maximum value	4294967295		MS	S	–

Parameter function: **MODBUS address: 16148**

Parameter value	Bit	Description	Related error number	Function	
	15	Reserved	–	–	–
L []XXXX	16	Reserved	–	–	–
	17	Reserved	–	–	–
	18	Reserved	–	–	–
	19	Reserved	–	–	–
H XXXX[]	20	Reserved	–	–	–
	21	Reserved	–	–	–
	22	Reserved	–	–	–
	23	Reserved	–	–	–
H XXX[]X	24	Reserved	–	–	–
	25	Reserved	–	–	–
	26	Reserved	–	–	–
	27	Reserved	–	–	–
H XX[]XX	28	Reserved	–	–	–
	29	Reserved	–	–	–
	30	Reserved	–	–	–
	31	Reserved	–	–	–

For example:

For P6-33= 0x0080, the error 4102 or error 4103 of Error Class 3 is triggered in the event of an overload (I^2T).

For P6-33= 0x0200, the error number 3201 or the error number 3202 is stored in the failure history storage area of the device.

Setting can only be modified if power stage is disabled.

Modified settings become active the next time the motor moves.

- For single-turn applications, bit 12 must be set to 1. Select motors equipped with single-turn encoders and encoder cables without battery compartments; no battery supply is required.
- For multi-turn applications, bit 12 must be set to 0. Select motors equipped with multi-turn encoders. Use encoder cables with battery compartments and provide batteries.

- Encoder feedback data

  Absolute encoder feedback data can be categorized into encoder rotation count data and the encoder's position within one revolution. Incremental position mode does not provide feedback on encoder rotation count data.

  Related parameters:

Address index	Name	Range	Factory setting	Unit	Data type	Modify method	Effective date
0x3052:0F	Encoder multi-turn information low 32 bits	-2147483648~214-7483647	0	P	Uint32	-	Effective immediately
0x3052:10	Encoder multi-turn information high 32 bits	-2147483648~214-7483647	0	P	Uint32	-	Effective immediately
0x3052:11	Encoder single-turn position information	-2147483648~214-7483647	0	P	Uint32	-	Effective immediately
0x3052:12	Encoder multi-turn position information	0~65536	0	Rev.	Uint32	-	Effective immediately

Setting the Limit Switches

Movements can be monitored using limit switches. A positive limit switch and a negative limit switch can be used for monitoring. When the movement exceeds the safe range, the servo motor can be forced to stop the movement via the input signal from the limit switches.

If the positive or negative limit switch is tripped, the movement stops. An error message is generated and the operating state switches to 7 Quick Stop Active.

NOTE: The use of limit switches can help protect against some hazards (for example, collision caused by incorrect command). To prevent accidents caused by poor contact or broken wires, use “NC logic” for the functions of the limit switches.

⚠ WARNING

LOSS OF CONTROL

- Ensure that limit switches are installed as determined by your risk assessment.
- Verify correct connection of the limit switches.
- Verify that the limit switches are sufficiently distant from the mechanical end to allow an adequate stopping distance.
- Verify correct parameterization and function of the limit switches.

Failure to follow these instructions can result in death, serious injury, or equipment damage.

With the factory settings, the input terminal Iofunc_DI2 on CN1 pin 43 is set to the positive limit function (NC logic), while the input terminal Iofunc_DI3 on CN1 pin 44 is set to the negative limit function (NC logic).

It is also possible to assign the LIMP/LIMN functions to other input terminals via the parameters P3-00...P3-11.

P3-00 … P3-11	Function of the input point DIx	Minimum value	1	Unit	Related control mode		
		Factory setting	–	–	P	V / Vz	T / Tz
		Maximum value	150		MS	S	–

Parameter function: **MODBUS address: –**

Function of the input point DIx

Function name	Function description	Function value		Related control mode				
		Normally open	Normally closed	P	S	V / Vz	T / Tz	MS
Positive Limit Switch (LIMP)	Positive limit switch	22	122	√	√	√	√	√
Negative Limit Switch (LIMN)	Negative limit switch	23	123	√	√	√	√	√

Setting can only be modified if power stage is disabled.

Modified settings become active the next time the product is powered on.

Reset Limit Error

When a limit error occurs, the lowest bit of the parameter P6-41 can be used to set how to reset the error message:

- When the lowest bit of P6-41 is set to 0, the error message can be resetby a fault reset operation, and the operating state will switch to “6 - Device Enable”. Now, the movement can continue, but only in the opposite direction.
- When the lowest bit of P6-41 is set to 1, the movement command can be sent directly to the device in the opposite direction of the triggered limit, the error message is reset automatically, and the motor moves in the opposite direction directly.

For example, if the positive limit is triggered, an error message E A302 is generated and the operating state switches to “7 - Quick Stop Active”.

- If the lowest bit of P6-41 is set to 0, the error message E A302 can be reset by a fault reset operation, and the operating state switches to “6 - Device Enable”. Now, the movement can continue, but the subsequent movements can only be negative. If the subsequent movements are still positive, the error message E A302 appears again and the operating state switches to “7 - Fast Stop Active”again.
- If the lowest bit of P6-41 is set to 1, the inverse movement command can be sent directly to the drive, the error message E A302 is reset automatically, the operating state switches to “6 - Device Enable”, and at the same time the motor starts to move in the opposite direction.

P6-41	Setting of special functions	Minimum value	0	Unit	Related control mode		
		Factory setting	0	–	P	V / Vz	T / Tz
		Maximum value	65535		MS	S	–

Parameter function: **MODBUS address: 1686**

Setting of special functions

Parameter value	Bit	Description	Function	
L XXXX[]	0	Fault reset method after isotropic limit trigger error	0	Fault reset manually after isotropic limit trigger error
			1	Fault reset automatically through reverse motion after isotropic limit trigger error
	1	Options of isotropic limit trigger error	0	Error and halt occur after isotropic limit is triggered
			1	No error or halt after isotropic limit is triggered

P6-41	Setting of special functions	Minimum value	0	Unit	Related control mode		
		Factory setting	0	–	P	V / Vz	T / Tz
		Maximum value	65535		MS	S	–

Parameter function: **MODBUS address: 1686**

Parameter value	Bit	Description	Function	
	2	Reserved	–	–
	3	Speed limit function options in profile torque	Speed limit function options in profile torque • Mode 1 (Bit 3 = 0, Bit 4 = 0): The speed is limited without increasing the negative torque when the torque is limited within the range of the positive and negative torque commands and an external force makes the speed greater than the speed limit. • Mode 2 (Bit 3 = 0, Bit 4 = 0): The speed is limited with increasing the negative torque when the torque is limited within the range of the positive and negative torque commands and an external force makes the speed greater than the speed limit. • Mode 3 (bit 3 = 0, bit 4 = 1): Unidirectional torque limit mode	
L XXX[]X	4			
	5	Reserved	–	–
	6	Reserved	–	–
	7	Reserved	–	–
L XX[]XX	8	Reserved	–	–
	9	Reserved	–	–
	10	Reserved	–	–
	11	Reserved	–	–
L X[]XXX	12	Reserved	–	–
	13	Reserved	–	–
	14	Reserved	–	–
	15	Reserved	–	–
L []XXXX	16	Reserved	–	–
	17	Reserved	–	–
	18	Reserved	–	–
	19	Reserved	–	–
H XXXX[]	20	Reserved	–	–
	21	Reserved	–	–
	22	Reserved	–	–
	23	Reserved	–	–
H XXX[]X	24	Reserved	–	–
	25	Reserved	–	–
	26	Reserved	–	–
	27	Reserved	–	–
H XX[]XX	28	Reserved	–	–
	29	Reserved	–	–
	30	Reserved	–	–
	31	Reserved	–	–

Setting can only be modified if power stage is disabled.

Modified settings become active the next time the motor moves.

P6-49	OverRangeSetup	Minimum value	0	Unit	Related control mode		
		Factory setting	0	–	P	V / Vz	T / Tz
		Maximum value	2		MS	S	–

Parameter function: **MODBUS address: 1722**

- When P6-49 = 0
  P6-41 = 0: Isotropic limit alarm, error reported, need to clear limit error before reversing
  P6-41 = 1: Isotropic limit alarm, reverse and automatically clear limit errors
  P6-41 = 2: Anisotropic limit alarm, error and halt occur
  P6-41 = 3: Anisotropic limit alarm, no error or halt
- When P6-49 = 1
  P6-41 = 3: When stopping at the limit point, no error is reported and the servo state remains unchanged.

Modified settings become active immediately.

Motor Holding Brake

A motor holding brake is a built-in component of a servo motor with a holding brake. When the power stage of the servo drive is disabled, the motor brake secures the motor position so that the moving part of the machine will not move by its own gravity or by external force.

Use the motor holding brake in the following situations as shown in the figure:

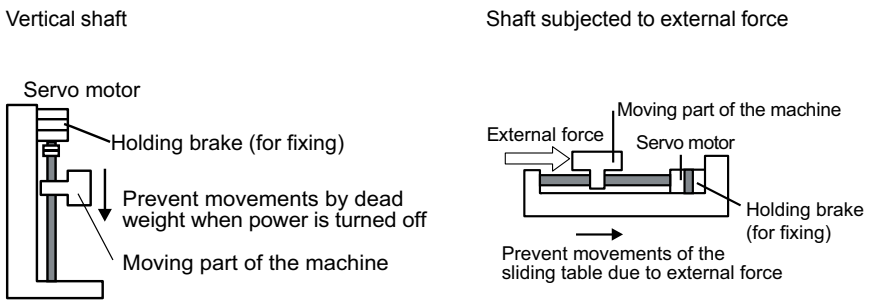

When using the motor holding brake, note the following:

- The motor holding brake is not a safety-related measure.
- The motor holding brake is used only to maintain the position of the motor in the Stop state and cannot be used to brake the motor.

⚠ WARNING

UNINTENDED AXIS MOVEMENT

- Do not use the internal holding brake as a safety-related measure.
- Only use certified external brakes as safety-related measures.

Failure to follow these instructions can result in death, serious injury, or equipment damage.

The operation of the motor holding brake is normally-closed logically. When the brake is energized, the holding brake will be excited and then opened. When the holding brake current is disconnected, the brake will be closed. There is a time delay for releasing the holding brake, and the time for releasing and applying the brake is shown in the following table:

Motor model	Holding brake voltage	Time delay for releasing (ms)	Time delay for applying (ms)
BCH18*B**F*	24Vdc	20	50
BCH18*D**F*		20	50

Motor model	Holding brake voltage	Time delay for releasing (ms)	Time delay for applying (ms)
BCH18*F**F*		20	60
BCH18*H**F*		20	60
BCH18*M**F*		60	120
BCH18*R**F*		80	200

It is possible to be set by the parameters P3-24...P3-30. The Release Brake function is assigned to one output terminal. Now, the device can automatically control the opening and closing of the motor holding brake, namely, to open the brake when the power stage is enabled and close the brake when the power stage is disabled.

NOTE: The function setting of the output points will be changed when restoring the factory settings, which may cause the brake to be released accidentally.

⚠WARNING

UNINTENDED MOVEMENT

- Ensure that the wiring and setting of the output assigned to the Release Brake signal output function of the brake are correct.
- Verify the output assigned to the Release Brake signal output function prior to restoring the factory settings to prevent accidental load movements caused by the opening of the brake. Or reassign it according to the machine requirements prior to starting the machine after restoring the factory settings.
- In all cases, the necessary measures must be taken to prevent accidental load movements caused by the opening of the brake.

Failure to follow these instructions can result in death, serious injury, or equipment damage.

P3-24 … P3-30	Function of the output point DQx	Minimum value	1	Unit	Related control mode		
		Factory setting	–	–	P	V / Vz	T / Tz
		Maximum value	131		MS	S	–

Parameter function: **MODBUS address: –**

Function of the output point DQx

Function name	Function description	Function value		Related control mode				
		Normally open	Normally closed	P	S	V / Vz	T / Tz	MS
Release Brake	Holding brake control	24	124	√	√	√	√	√

Setting can only be modified if power stage is disabled.

Modified settings become active the next time the product is powered on.

If the Lexium 18 servo drive is connected to a motor with a holding brake, when the machine is enabled, the machine is automatically delayed for a period of time until the holding brake is released and the machine's operating state switches to “6 - Device Enable”, during which the motor remains energized. It is possible to add an additional time delay for releasing the holding brake via the parameter P5-20, where the device switches to “6-Device Enable” only when the full time delay is completed.

Similarly, if the Lexium 18 servo drive is connected to a motor with a holding brake, when the device is enabled, the device is automatically delayed for a period of time, during which the motor remains energized. It is possible to add an additional time delay for applying the holding brake via the parameter P5-21, where the motor remains energized until the entire time delay is completed.

The time sequence of the brake releasing and applying is shown in the figure:

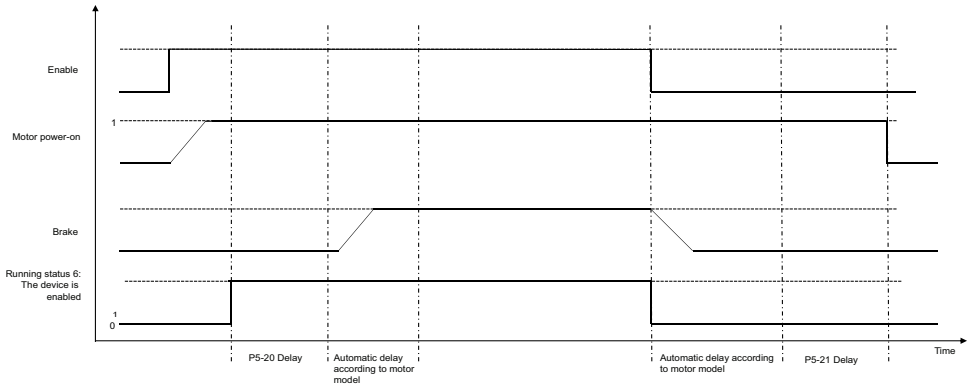

P5-20	Additional time delay for releasing the holding brake	Minimum value	0	Unit	Related control mode		
		Factory setting	0	1 ms	P	V / Vz	T / Tz
		Maximum value	400		MS	S	–

Parameter function: **MODBUS address: 1294**

Additional time delay for releasing the holding brake

The overall time delay for releasing the holding brake is the mechanical time for releasing the brake plus the time value set via this parameter.

Setting can only be modified if power stage is disabled.

Modified settings become active the next time the motor moves.

P5-21	Additional time delay for applying the holding brake.	Minimum value	0	Unit	Related control mode		
		Factory setting	0	1 ms	P	V / Vz	T / Tz
		Maximum value	1000		MS	S	–

Parameter function: **MODBUS address: 1296**

Additional time delay for applying the holding brake

The total time of applying the motor holding brake is the mechanical time of releasing the brake plus the time value set in this parameter.

Setting can only be modified if power stage is disabled.

Modified settings become active the next time the motor moves.

Here is the standard wiring for motor holding brake control:

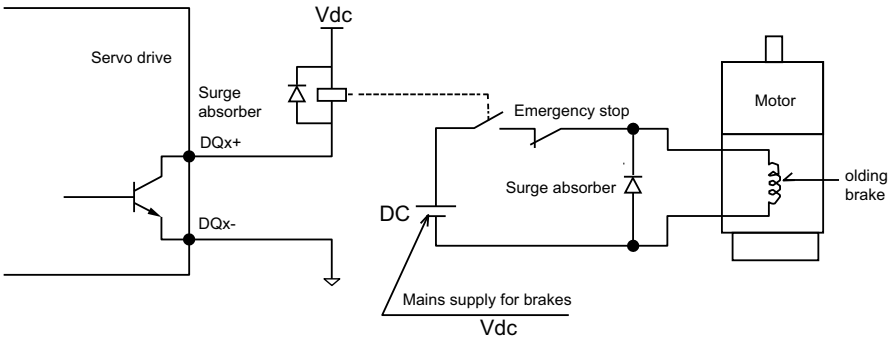

NOTICE

UNINTENDED MOVEMENT

- The motor holding brake coil is non-polarized.
- Design a relay circuit to control the motor holding brake. Do not connect the motor holding brake directly to the output points of the device, as this may cause damage to the device.
- Design an emergency stop switch so that the holding brake will be applied when the emergency stop is triggered.
- To suppress the surge voltage caused by the releasing/applying operation of the motor holding brake, design a surge protection unit in accordance with the standard wiring diagram. Note that the releasing time of the motor holding brake will be slightly longer than that in the situations where a surge protection unit is used if a flyback diode is used.
- Be sure to separate the 24Vdc mains supply used for the holding brake from the mains supply used for the I/O signals (CN1) of the device, otherwise the I/O signals may operate unintentionally.

Failure to follow these instructions can result in equipment damage.

Braking Resistors

The Lexium18 servo drive has a built-in braking resistor (above 750w). An external braking resistor is required when the device does not come with enough handling capacity for regeneration energy.

When selecting the rating of the external braking resistor, note the following conditions:

Drive specification	Minimum resistance value of the external braking resistor in Ω
LXM18P*U01 / 02 / 04	40
LXM18P*U07 / 10 / 15	20
LXM18P*U20/30	15

Method of connecting the external braking resistor is as below:

Remove the short-circuit jumper between the PB+ / PBi terminals on the servo drive plug-in connector, and connect an external braking resistor between the PB+ / PBe terminals on the plug-in connector.

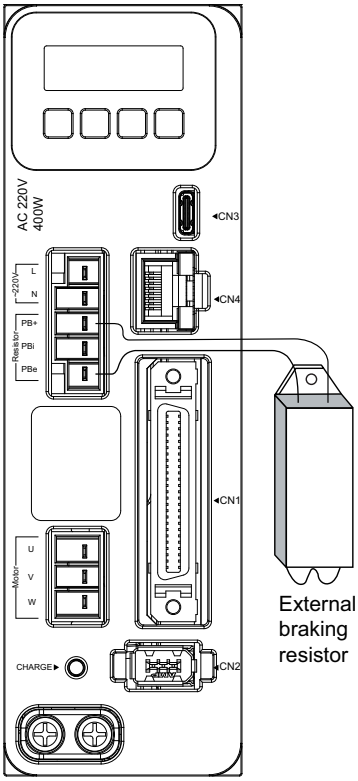

After the external braking resistor is connected, you canSet its capacity, resistance values, and protection parameters via parameters and enable the external braking resistor.

P0-22	Nominal power of external braking resistor	Minimum value	S1: 400 S2: 600 S3: 1500	Unit	Related control mode		
		Factory setting	10	W	P	V / Vz	T / Tz
		Maximum value	32767		MS	S	–
Parameter function:			**MODBUS address: 1316**				
P0-22(MAX)=P0-23(current value)*A A: S1 is 10, S2 is 30, S3 is 100 It is recommended not to exceed the drive power. **Setting can only be modified if power stage is disabled.** **Modified settings become active the next time the motor moves.**							

P0-23	Resistance value of external braking resistor	Minimum value	S1: 40 S2: 20 S3: 15	Unit	Related control mode		
		Factory setting	10000	0.01 Ohm	P	V / Vz	T / Tz
		Maximum value	32767		MS	S	–

Parameter function: **MODBUS address: 1318**

Resistance value of external braking resistor

In increments of 0.01 Arms

Setting can only be modified if power stage is disabled.

Modified settings become active the next time the motor moves.

P0-24	Maximum permissible switch-on time of external braking resistor	Minimum value	1	Unit	Related control mode		
		Factory setting	100	1 ms	P	V / Vz	T / Tz
		Maximum value	30000		MS	S	–

Parameter function: **MODBUS address: 1314**

Maximum permissible switch-on time of external braking resistor

Setting can only be modified if power stage is disabled.

Modified settings become active the next time the motor moves.

P0-25	Enabling the external braking resistor	Minimum value	0	Unit	Related control mode		
		Factory setting	0	–	P	V / Vz	T / Tz
		Maximum value	1		MS	S	–

Parameter function: **MODBUS address: 1298**

Whether to enable the external braking resistor

0 / Internal Braking Resistor

1 / External Braking Resistor

Setting can only be modified if power stage is disabled.

Modified settings become active the next time the motor moves.

JOG

A jog is a JOG run of a servo motor.

Usually, the purpose of JOG is to verify that the servo drive and servo motor are properly connected and that the servo motor can operate properly.

Inspection and Precautions Prior to a JOG

To perform the JOG run safely and correctly, check and verify the following items prior to the JOG run:

- Servo drive:

  Is the wiring and setting of the servo drive correct?

  Is the input mains voltage of the servo drive normal?
- Servo motor:

  Is the wiring from the servo motor to the servo driver correct?

  Are the connection fasteners secure?

If it is a servo motor with the holding brake, you should apply the specified voltage (24Vdc) to the servo motor holding brake to release it before starting the JOG run.

⚠ WARNING

UNINTENDED MOVEMENT

- Start the system only if there is no person or obstruction in the zone of operation.
- An emergency stop switch must be available within the range of the servo motor.

Failure to follow these instructions can result in death, serious injury, or equipment damage.

Perform JOG via the HMI front panel integrated with the device:

The JOG parameter set on the panel allows you to edit and select the velocity and direction of JOG movement, and operate the motor.

- To set JOG velocity:

Step	Current display content on the panel	Key used	Operation
0	rdY	M S	Click the S key and the panel displays OP.
1	oP	M S	Click the S key and the panel displays JOG.
2	JoG	M S	Click the S key and the panel displays JGSt.
3	JGSt	M S	Click the Page Up or Page Down key to select the drive's JOG operation or configure JOG parameters.
4	P4-05	M S	Click the S key and the panel displays the current value of the parameter P4-05.
	P4-06		Click the S key and the panel displays the current value of the parameter P4-06.
5	00100.	M S	The ones digit of the parameter value starts blinking to indicate that the numerical setting can be modified.
6	00100.	M S	Click the Page Up or Page Down key to edit the value of parameter. Each time you click the Page Up key, the value is added by 1, and each time you click the Page Down key, the value is subtracted by 1.
7	00105.	M S	Click the S key to move the cursor from right to left. Each time you click, the cursor is moved to left by 1 character.
8	00105.	M S	Click the Page Up or Page Down key to edit the value of parameter. Each time you click the Page Up key, the value is added by 1, and each time you click the Page Down key, the value is subtracted by 1.
9	00305.	M S >1.5s	After completing the parameter adjustment, press and hold the S key for more than 1.5 seconds, and then the current parameter value flashes once before fixing, indicating that the current parameter value is saved.
10	00305.	M	Click the M key to exit the current parameter.
11	P4-05	M S	The panel displays P4-05 and the editing of the parameter value is done.
	P4-06		The panel displays P4-06 and the editing of the parameter value is done.

- Activate the JOG operation, and run the motor in this step.

Step	Current display content on the panel	Key used	Operation
0	rdY	M ⌃ ⌄ S	Click the S key and the panel displays OP.
1	oP	M ⌃ ⌄ S	Click the S key and the panel displays JOG.
2	JoG	M ⌃ ⌄ S	Click the S key and the panel displays JGSt.
3	JGSt	M ⌃ ⌄ S	Click the S key to activate the JOG operation. Now, the drive power stage is on and the drive enters the Enable state.
4	JG- JG= -JG =JG	M ⌃ ⌄ S	Click the Page Up or Page Down key to select JOG velocity and direction
5	JG-	M ⌃ ⌄ S	Press and hold the S key and the motor moves in the positive direction at the velocity set in the parameter P4-05. Release the S key to stop the motor movement.
	JG=		Press and hold the S key and the motor moves in the positive direction at the velocity set in the parameter P4-06. Release the S key to stop the motor movement.
	-JG		Press and hold the S key and the motor moves in the positive direction at the velocity set in the parameter P4-05. Release the S key to stop the motor movement.
	=JG		Press and hold the S key and the motor moves in the positive direction at the velocity set in the parameter P4-06. Release the S key to stop the motor movement.

Step	Current display content on the panel	Key used	Operation
6	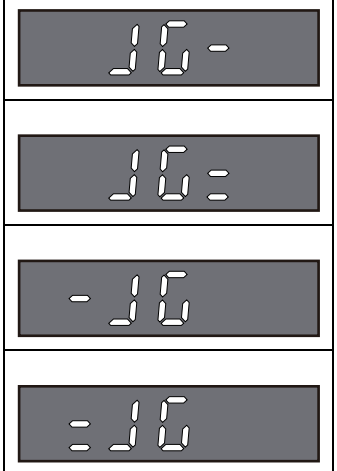	M	Click the M key at any moment to exit the JOG operation.
7			The panel displays JOG. Now, the drive power stage is off and the drive exits the Enable state.

- Related parameters

P4-05	JOG velocity for slow movement.	Minimum value	1	Unit	Related control mode		
		Factory setting	100	usr_v	P	V / Vz	T / Tz
		Maximum value	2147483647		–	S	–

Parameter function: **MODBUS address: 10504**

JOG velocity for slow movement.

The adjustable value is internally limited to the parameter setting in P4-01.

Modified settings become active immediately.

P4-06	JOG velocity for fast movement.	Minimum value	1	Unit	Related control mode		
		Factory setting	200	usr_v	P	V / Vz	T / Tz
		Maximum value	2147483647		–	S	–

Parameter function: **MODBUS address: 10506**

JOG velocity for fast movement.

The adjustable value is internally limited to the parameter setting in P4-01.

Modified settings become active immediately.

Performing JOG via Input Terminals

It is possible to select the velocity and direction of the JOG by assigning functions to the device's input terminals and via an external input signal, and to start the JOG:

- The Jog Positive/Jog Negative/Jog Fast/Slow functions are assigned to the input terminals via the parameters P3-00...P3-11 for the Start JOG Positive/ Start JOG Negative/Switch JOG between Fast and Slow Velocities respectively.
- Set the slow velocity of the JOG via the parameter P4-05
- Set the fast velocity of the JOG via the parameter P4-06

P3-00 … P3-11	Function of the input point DIx	Minimum value	1	Unit	Related control mode		
		Factory setting	–	–	P	V / Vz	T / Tz
		Maximum value	150		MS	S	–

Parameter function: MODBUS address: –

Function of the input point DIx

Setting can only be modified if power stage is disabled.

Modified settings become active the next time the product is powered on.

P4-05	JOG velocity for slow movement.	Minimum value	1	Unit	Related control mode		
		Factory setting	100	usr_v	P	V / Vz	T / Tz
		Maximum value	2147483647		–	S	–

Parameter function: **MODBUS address: 10504**

JOG velocity for slow movement.

The adjustable value is internally limited to the parameter setting in P4-01.

Modified settings become active immediately.

P4-06	JOG velocity for fast movement.	Minimum value	1	Unit	Related control mode		
		Factory setting	200	usr_v	P	V / Vz	T / Tz
		Maximum value	2147483647		–	S	–

Parameter function: **MODBUS address: 10506**

JOG velocity for fast movement.

The adjustable value is internally limited to the parameter setting in P4-01.

Modified settings become active immediately.

Setting of Velocity Profile During a JOG

The velocity profile of JOG movements can be modified by the parameters.

The target position and target velocity of the servo drive are given by external position pulses, and the profile control function recalculates the movement profile based on these inputs.

P4-00	Activation of the motion profile for velocity.	Minimum value	0	Unit	Related control mode		
		Factory setting	1	–	P	V / Vz	–
		Maximum value	1		–	S	–

Parameter function: **MODBUS address: 1622**

Activation of the motion profile for velocity.

0 / Profile Off: Profile off

1 / Profile On: Profile on

Setting can only be modified if power stage is disabled.

Modified settings become active immediately.

P4-01	Maximum velocity of the motion profile for velocity.	Minimum value	1	Unit	Related control mode		
		Factory setting	13200	usr_v	P	V / Vz	–
		Maximum value	2147483647		–	S	–

Parameter function: **MODBUS address: 1554**

Maximum velocity of internal motion of the drive

If a greater reference velocity is set in one of these operating modes, it is automatically limited to this parameter.

Setting can only be modified if power stage is disabled.

Modified settings become active immediately.

P4-02	Acceleration of the motion profile for velocity.	Minimum value	1	Unit	Related control mode		
		Factory setting	6000	usr_a	–	V / Vz	–
		Maximum value	2147483647		MS	S	–

Parameter function: **MODBUS address: 1556**

Acceleration of the motion profile for velocity.

In any motion profile for velocity, the acceleration set via this parameter will be used.

If the acceleration of the velocity command is greater than the value set via this parameter when the analog input voltage is used as the velocity command, the acceleration of the actual motion will be automatically limited to the acceleration set via this parameter

Modified settings become active the next time the motor moves.

P4-03	Deceleration of motion profile of the drive	Minimum value	1 or 120	Unit	Related control mode		
		Factory setting	6000	usr_a	–	V / Vz	–
		Maximum value	2147483647		MS	S	–

Parameter function:	MODBUS address: 1558

Deceleration of motion profile of the drive

In any mode motion profile for velocity, the deceleration set in this parameter is used.

If the deceleration of the velocity command is greater than the value set in this parameter when the analog input voltage is used as a velocity command, the deceleration of the actual movements is automatically limited to the deceleration set in this parameter.

Operating mode with a minimum value of 1:

- Gear
- Profile Velocity
- MS (Move Velocity)

Operating mode with a minimum value of 120:

- Jog
- Profile Position
- Homing
- MS (Move absolute / Move additive / Move relative / Reference movement)

Modified settings become active the next time the motor moves.

Electronic Gear Control

The position of the pulse position control movements depends on the internal pulse. The Lexium 18 servo drives have an internal position count unit of 131072 internal count/turn. For the drives, the command pulses received by the pulse input channels are converted into internal position command increments via the electronic gear ratio parameters.

Electronic Gear Control Block Diagram

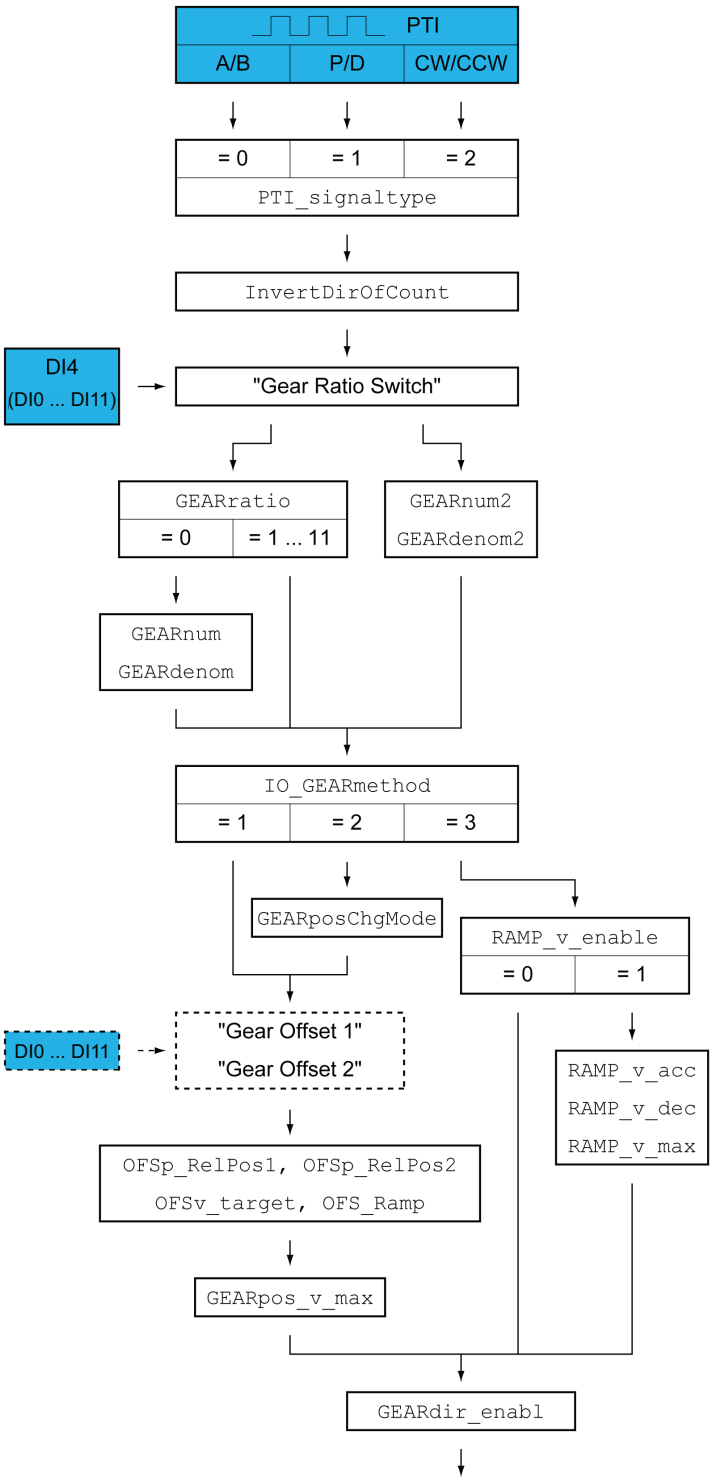

Pulse Input Signal Processing

Selection of Pulse Input Channels

When external pulses are used as position command inputs, the drive can receive external pulse inputs from either a low-speed open collector channel (24Vdc@200kHz or 5Vdc@500kHz) or a differential high-speed channel (RS422@16 MHz), while the user can select the pulse input channels by parameter.

P0-07	High/Low velocity PTI pulse input channel	Minimum value	0	Unit	Related control mode		
		Factory setting	0	–	P	–	–
		Maximum value	1		–	–	–

Parameter function: **MODBUS address: 1398**

0 / Low velocity PTI input.

1 / High velocity PTI input.

Setting can only be modified if power stage is disabled.

Modified settings become active immediately.

Selection of the Pulse Type

When external pulses are used as position command inputs, the drive can receive three types of external pulse inputs: A/B phase quadrature (with 4x frequency), pulse + direction, and clockwise direction + counter-clockwise direction. The user can select the pulse type by parameter.

P0-08	Type of reference value signal for PTI interface	Minimum value	0	Unit	Related control mode		
		Factory setting	1	–	P	–	–
		Maximum value	3		–	–	–

Parameter function: **MODBUS address: 1284**

Type of reference value signal for PTI interface

0 / A / B signals: Signals ENC_A and ENC_B (quadruple evaluation).

1 / P / D signals

2 / Signals clockwise / counter-clockwise

3 / Reservation.

Setting can only be modified if power stage is disabled.

Modified settings become active the next time the product is powered on.

Selection of the Pulse Input Filter

To remove the high frequency interference coupled to the pulse input signals, a set of low-pass filters can be set on the pulse inputs to filter out the high frequency interference.

To prevent the distortion of the pulse input signals, it is recommended that the cut-off frequency of the low-pass filter is more than twice the maximum frequency of the command pulse inputs.

P0-09	Setting of PTI pulse low-pass filter	Minimum value	0	Unit	Related control mode		
		Factory setting	0	–	P	–	–
		Maximum value	8000		–	–	–

Parameter function: **MODBUS address: 1374**

Setting of PTI pulse low-pass filter

0 / Without filter: Invalid low-pass filter.

8000 / 8000 kHz: The low-pass filter has a cutoff frequency of 8000 kHz.

2000 / 2000 kHz: The low-pass filter has a cutoff frequency of 2000 kHz.

1000 / 1000 kHz: The low-pass filter has a cutoff frequency of 1000 kHz.

500 / 500 kHz: The low-pass filter has a cutoff frequency of 500 kHz.

250 / 250 kHz: The low-pass filter has a cutoff frequency of 250 kHz.

125 / 125 kHz: The low-pass filter has a cutoff frequency of 125 kHz.

50 / 50 kHz: The low-pass filter has a cutoff frequency of 50 kHz.

When the PTI signal type set in the parameter P0-08 is [0 / A / B Signals], the minimum value of this parameter should start from [250/250 kHz] because the A/B Signals carry 4 times the frequency.

Setting can only be modified if power stage is disabled.

Modified settings become active the next time the product is powered on.

Input Pulse Inhibition Functions

Position Deviation Clear (CCLR) Function

The position deviation clear function clears the position deviation signals accumulated inside the drive. While the position deviation clear function is active, the drive position loop is always given 0 because the position deviation is always 0.

The position deviation clear function is activated via the input points and this function is only allowed to be configured on the high-speed input points. The user can configure whether the position error clear function is active at the rising edge of the input signal or at the high level by parameter.

P3-62	Pulse Clear (CCLR) mode	Minimum value	0	Unit	Related control mode		
		Factory setting	0	–	P	–	–
		Maximum value	1		–	–	–
Parameter function:			MODBUS address: 1688				

Pulse Clear (CCLR) mode

0 / Rising Edge: A rising edge with the signal input function [Clear Position Deviation] enables the power stage.

1 / HighLevel: An active signal input with signal input function [Clear Position Deviation] enables the power stage.

Setting can only be modified if power stage is disabled.

Modified settings become active immediately.

Input Pulse Inhibition (INHP) Functions

The input pulse inhibition functions inhibit the external pulse input counting functions. The drive does not receive external pulse inputs while the input pulse inhibition functions are active.

The input pulse inhibition functions are activated via input points and require that the functions be assigned to an input point, which are only supported for level activation.

Electronic Gear Control

In Electronic Gear Control mode, the servo drive controls motor movements based on given pulse signals from external inputs and converts the pulse signals to position commands based on the electronic gear ratio. The given pulse signals can be Pulse/direction signalsClockwise / counter-clockwise signals or Reservation.

Selection of the Electronic Gear Ratio

There are two ways to set the electronic gear ratio parameters:

- Select an electronic gear ratio directly in the list via the parameter P0-10.
- Calculate the electronic gear ratio by means of the proportional relationship of the parameters P0-12/P0-11 or P0-14/P0-13.

The setting of the parameter P0-10 takes precedence over the calculation of the ratio of the parameters P0-12/P0-11 or P0-14/P0-13. If the list of the parameter P0-10 does not contain an electronic gear ratio suitable for the application, the value of the parameter P0-10 is set to 0, and then the electronic gear ratio is calculated by the proportional relationship of the parameters P0-12/P0-11 or P0-14/P0-13.

The calculation of the electronic gear ratio using the numerator/denominator setting is as follows.

PTI x (numerator / denominator) = motor position (in turns) x 131072

For example: When it is desired that 10,000 PTI inputs receive command pulses to make the motor turn once:

- Select 10000 in the parameter P0-10.
- Or, select 0 in the parameter P0-10, then according to the calculation equation to get:

10000 × (numerator / denominator) = 1 (turn) × 131072

Therefore the electronic gear ratio = numerator / denominator = 131072 / 10000

So, set the parameter P0-11 to 10000 and the parameter P0-12 to 131072. Or, set the parameter P0-13 to 10000 and the parameter P0-14 to 131072.

P0-10	Selection of gear ratio	Minimum value	0	Unit	Related control mode		
		Factory setting	8	–	P	–	–
		Maximum value	11		–	–	–

Parameter function: **MODBUS address: 9740**

Select the electronic gear ratio directly

0 / Calculation by numerator / denominator: calculation of electronic gear ratio by numerator / denominator

1 / 200

2 / 400

3 / 500

4 / 1000

5 / 2000

6 / 4000

7 / 5000

8 / 10000

9 / 4096

10 / 8192

11 / 16384

Modified settings become active immediately.

P0-11	Denominator of gear ratio number 1	Minimum value	1	Unit	Related control mode		
		Factory setting	10000	–	P	–	–
		Maximum value	2147483647		–	–	–

Parameter function: **MODBUS address: 9734**

Denominator of gear ratio number 1

Electronic gear ratio = P0-12 / P0-11.

The internal calculation pulse equivalent of the servo drive is 131072 counts per turn

Actual number of turns* 131072 = number of input PTI pulses * P0-12 / P0-11.

Modified settings become active immediately.

P0-12	Numerator of gear ratio number 1	Minimum value	-2147483648	Unit	Related control mode		
		Factory setting	131072	–	P	–	–
		Maximum value	2147483647		–	–	–

Parameter function: **MODBUS address: 9736**

Numerator of gear ratio number 1

See parameters P0-11.

Modified settings become active immediately.

P0-13	Denominator of gear ratio number 2	Minimum value	1	Unit	Related control mode		
		Factory setting	10000	–	P	–	–
		Maximum value	2147483647		–	–	–

Parameter function: **MODBUS address: 9752**

Denominator of gear ratio number 2

See parameters P0-11.

Modified settings become active immediately.

P0-14	Numerator of gear ratio number 2	Minimum value	-2147483648	Unit	Related control mode		
		Factory setting	131072	–	P	–	–
		Maximum value	2147483647		–	–	–

Parameter function: **MODBUS address: 9754**

Numerator of gear ratio number 2

See parameters P0-11.

Modified settings become active immediately.

Electronic Gear Ratio Switching

When external pulses are used as position command inputs, the servo drive switches between two sets of electronic gear ratios calculated by dividing the numerator by the denominator using input points assigned with the “Electronic Gear Ratio Switching” function.

Smoothing function

Smoothing Filters

The use of smoothing filter functions allows to inhibit rapid changes in the position command and to smooth out the operation of the motor.

The Lexium18 provides two types of smoothing filter functions in position control mode: position command smoothing filters and position command low-pass smoothing filters.

Position command averaging filter

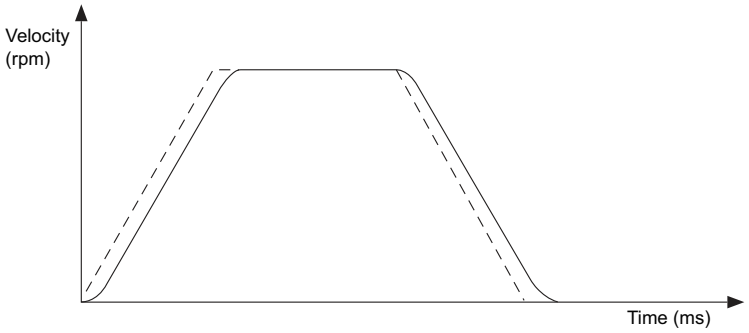

P1-26	Position command averaging filter	Minimum value	0	Unit	Related control mode		
		Factory setting	1	–	P	–	–
		Maximum value	1		–	S	–

Parameter function:

MODBUS address: 9742

0/ Disable: Disable the position command averaging filter.

1/ Enable: Enable the position command averaging filter

Setting can only be modified if power stage is disabled.

Modified settings become active the next time the motor moves.

P1-27	Time constant of position command averaging filter	Minimum value	0	Unit	Related control mode		
		Factory setting	0	1 ms	P	–	–
		Maximum value	128		MS	S	–

Parameter function:

MODBUS address: 1562

Time constant of position command averaging filter

Modified settings become active immediately.

Position loop command low-pass filter:

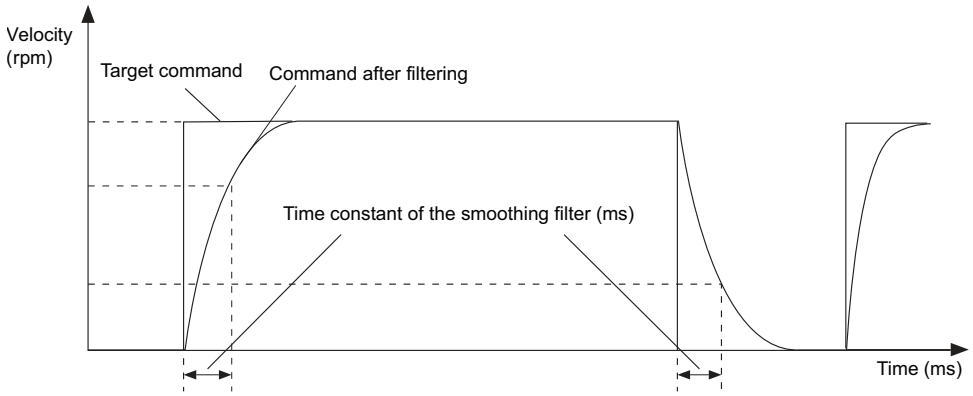

P1-28	Time constant of the position loop command low-pass filter	Minimum value	0	Unit	Related control mode		
		Factory setting	0	0.01 ms	P	–	–
		Maximum value	25600		MS	S	–

Parameter function: **MODBUS address: 4448**

Time constant of the position loop command low-pass filter

This parameter is active for both velocity loop feed-forward and acceleration feed-forward.

In increments of 0.01 ms.

Modified settings become active immediately.

Direction of Operation Control

Motor Inversion

The user can inverse the direction of rotation of the motor by parameter.

P0-06	Motor rotation direction setting	Minimum value	0	Unit	Related control mode		
		Factory setting	0	–	P	V / Vz	T / Tz
		Maximum value	1		MS	S	–

Parameter function: **MODBUS address: 1560**

Motor rotation direction setting

0 / Inversion Off: Disable the inversion of the direction of rotation of the motor.

1 / Inversion On: Enable the inversion of the direction of rotation of the motor.

Setting can only be modified if power stage is disabled.

Modified settings become active immediately.

Permissible direction of motor operation

The user can parameterize the permissible direction of motor operation, so that the one-way movement cannot be reversed.

P5-25	Permissible direction of motor operation	Minimum value	1	Unit	Related control mode		
		Factory setting	3	–	P	V / Vz	T / Tz
		Maximum value	3		MS	S	–
Parameter function:			MODBUS address: 9738				

Permissible direction of motor operation

1 / Both: The motor is allowed to run in both positive and negative directions.

2 / Negative: The motor is allowed to run in the negative direction only.

3 / Both: The motor is allowed to run in both positive and negative directions.

Modified settings become active immediately.

Setting Pulse Following Modes

Pulse Following Modes

The Lexium18 servo drives support three pulse following modes, which can be set by the parameter P0-15.

- 1 - Position synchronization without compensation movement:

  When the servo drive is in the operating state “6 - Device Enable”, the actual movements are synchronized with the position of the pulse signals received at the PTI inputs. The pulse commands received during the process when movements are interrupted by Halt or by a detected error of error class 1 are ignored the servo drive.
- 2 - Position synchronization with compensation movement:

  When the servo drive is in the operating state “6 - Device Enable”, the actual movements are synchronized with the position of the pulse signals received at the PTI inputs. For the pulse signals received during the process when movements are interrupted by Halt or by a detected error of error class 1, the servo drive save and compensate for them when it is in the operating state “6-Device Enable”.
- 3 - Velocity synchronization:

  The actual movements are synchronized with the velocity of the pulse signals received at the PTI inputs when the servo drive is in the operating state “6-Device Enable”.

P0-15	Processing mode for operating mode Electronic Gear.	Minimum value	1	Unit	Related control mode		
		Factory setting	1	–	P	–	–
		Maximum value	3		–	–	–
Parameter function:			MODBUS address: 1326				

Processing mode for operating mode Electronic Gear.

1 / Position synchronization without compensation movement

2 / Position synchronization with compensation movement

Velocity synchronization

Modified settings become active the next time the motor moves.

Methods of Compensation of the Pulse Signals Received when Disabled

When the parameter P0-15 is set to “2 - Position Synchronization with Compensation Movement”, it can be further set by the parameter P0-16 whether to ignore or compensate for the pulses received at the PTI inputs when disabled when the servo drive is in the operating state “6 - Device Enable”.

P0-16	**Treatment of position changes with inactive power stage.**	**Minimum value**	**0**	**Unit**	**Related control mode**		
		Factory setting	**0**	**–**	**P**	**–**	**–**
		Maximum value	**1**		**–**	**–**	**–**

Parameter function: **MODBUS address: 9750**

Treatment of position changes with inactive power stage.

0 / Off: Position changes in states with disabled power stage are ignored.

1 / On: Position changes in states with disabled power stage are taken into account.

This setting has an effect only if gear processing is started in the mode 'Synchronization with compensation movement'.

Modified settings become active the next time the motor moves.

Special Functions

Pulse Offset Movement (Offset Gear)

It is possible to perform a pulse offset movement with a settable movement distance via the input point function.

This function is available only when P0-15 is set to “1 - Position Synchronization without Compensation Movement” and “2 - Position Synchronization with Compensation Movement”.

The pulse offset movement function is activated via the input points of the drive. To use this function, the user needs to set the input point function, as well as the distance, velocity, and acceleration/deceleration of offset movements.

P5-10	Offset motion distance 1	Minimum value	-2147483648	Unit	Related control mode		
		Factory setting	0	usr_p	P	–	–
		Maximum value	2147483647		MS	S	–
Parameter function:			MODBUS address: 10000				
Relative offset position of offset movement 1 **Modified settings become active immediately.**							

P5-11	Offset motion distance 2	Minimum value	-2147483648	Unit	Related control mode		
		Factory setting	0	usr_p	P	–	–
		Maximum value	2147483647		MS	S	–
Parameter function:			MODBUS address: 10004				
Relative offset position of offset movement 2 **Modified settings become active immediately.**							

P5-12	Target velocity of offset movements	Minimum value	1	Unit	Related control mode		
		Factory setting	60	usr_v	P	–	–
		Maximum value	2147483647		MS	S	–
Parameter function:			MODBUS address: 9992				
Target offset motion velocity **Modified settings become active immediately.**							

P5-13	Acceleration and deceleration of offset movement	Minimum value	1	Unit	Related control mode		
		Factory setting	600	usr_a	P	–	–
		Maximum value	2147483647		MS	S	–
Parameter function:			MODBUS address: 9996				
Acceleration and deceleration of offset movement **Setting can only be modified if power stage is disabled.** **Modified settings become active the next time the motor moves.**							

Relative Movement After Capture (RMAC) of the Input Signals

With the hardware capture function of high-speed input points, an additional relative movement can be executed after the input signal capture, while the movement currently being executed is interrupted. This method makes it possible to perform high-precision positioning.

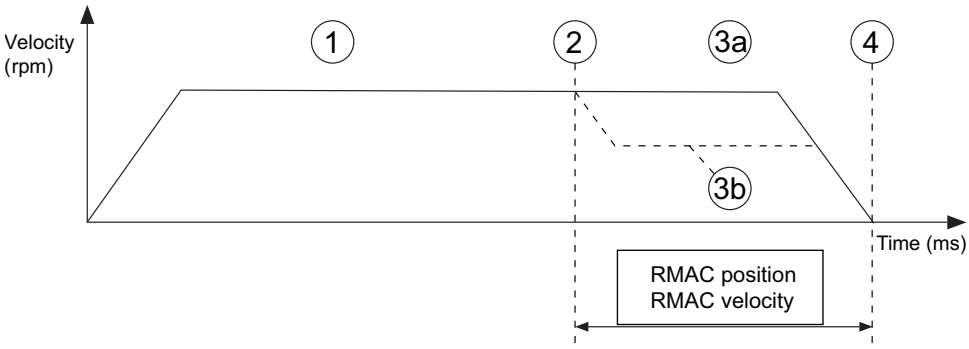

1: Movement mode with setting (e.g. Velocity control mode)
2: Relative movement is active after the signal input function "RMAC Active" is captured.
3a: Execution of RMAC at a constant velocity
3b: Execution of RMAC at the velocity set by parameter
4: Target position reached

The RMAC is active via the signals at the high-speed input points of the drive. When using this function, the user needs to set the input point function, the edge mode in which the input capture signals work, and the distance and velocity of relative movements.

Combined with the target velocity, target position, and the deceleration active currently, the target position may be overshot and the user can set the method of reaction to it.

The drive can indicate whether the movement is done or not through an output terminal.

When the movement is done, it is necessary to trigger another input point defined as the “Operating Mode On” function to exit the motion capture mode, otherwise the drive will stay in the current capture trigger movement mode and will not move again.

P5-26	RMAC movement: target position	Minimum value	-2147483648	Unit	Related control mode		
		Factory setting	0	usr_p	P	V / Vz	T / Tz
		Maximum value	2147483647		–	–	–
Parameter function:			MODBUS address: 8986				
RMAC: Target position of relative movement after capture.							
Modified settings become active immediately.							

P5-27	RMAC: target velocity	Minimum value	0	Unit	Related control mode		
		Factory setting	0	usr_v	P	V / Vz	T / Tz
		Maximum value	2147483647		–	–	–
Parameter function:			MODBUS address: 8988				
RMAC movement: target velocity of RMAC.							
Modified settings become active immediately.							

P5-28	RMAC: reaction when over-travel of target position	Minimum value	0	Unit	Related control mode		
		Factory setting	0	–	P	V / Vz	T / Tz
		Maximum value	2		–	–	–
Parameter function:			MODBUS address: 8990				
0 / Error Class 1 1 / No Movement To Target Position 2 / Movement To Target Position **Modified settings become active immediately.**							

P5-29	RMAC movement: triggering the edge mode of signals	Minimum value	0	Unit	Related control mode		
		Factory setting	0	–	P	V / Vz	T / Tz
		Maximum value	1		–	–	–
Parameter function:			MODBUS address: 8992				
0 / Falling Edge: Falling edge 1 / Rising Edge: Rising edge **Modified settings become active immediately.**							

Backlash Compensation

In servo system applications, the backlash generated by gear transmission negatively impacts equipment positioning accuracy, operational stability, and dynamic response, leading to machining errors and equipment vibration. By appropriately configuring parameters and optimizing operational procedures, the adverse effects of gear backlash can be effectively eliminated or minimized, thereby enhancing overall equipment performance and operational efficiency.

By setting backlash compensation, mechanical backlash can be compensated.

An example of mechanical backlash is shown below:

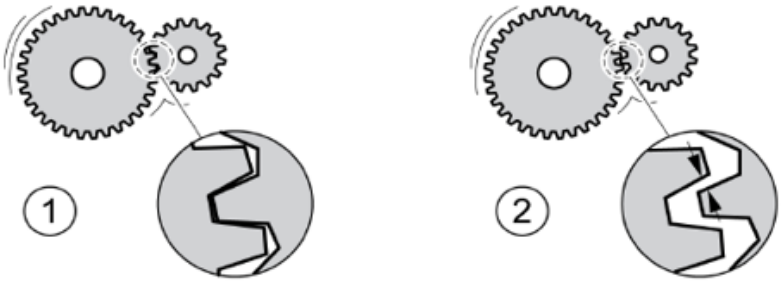

1: The tooth-tooth clearance is relatively small.

2: The tooth-tooth clearance is relatively large.

When reverse backlash compensation is activated, the driver automatically compensates for mechanical backlash during each movement. Reverse backlash compensation is available in the following operating modes:

- Jog
- Profile Position
- Homing

You can compensate for mechanical backlash by making the motor move an additional distance when it is running negative.

P5-22	Backlash compensation mode	Minimum value	0	Unit	Related control mode		
		Factory setting	0	–	P	–	–
		Maximum value	3		MS	S	–

Parameter function: **MODBUS address: 1666**

Backlash compensation mode

0 / Off: Backlash compensation is off.

1 / OnAfterPositiveMovement: Backlash compensation is on, last movement was in positive direction.

2 / OnAfterNegativeMovement: Backlash compensation is on, last movement was in negative direction.

3 / OnAfterPositiveOrNegativeMovement: Backlash compensation is on, last movement was in positive or negative direction.

Modified settings become active immediately.

P5-23	Backlash compensation value	Minimum value	0	Unit	Related control mode		
		Factory setting	0	usr_p	P	–	–
		Maximum value	2147483647		MS	S	–

Parameter function: **MODBUS address: 1668**

Backlash compensation value

Setting can only be modified if power stage is disabled.

Modified settings become active the next time the motor moves.

P5-24	Backlash compensation processing time	Minimum value	0	Unit	Related control mode		
		Factory setting	0	1 ms	P	–	–
		Maximum value	16383		MS	S	–

Parameter function: **MODBUS address: 1672**

Processing time for backlash compensation

Value 0: Immediate backlash compensation.

Value > 0: Processing time for backlash compensation.

Setting can only be modified if power stage is disabled.

Modified settings become active the next time the motor moves.

Monitoring Functions

Monitoring Position Following Status

When external pulses are used as position command inputs, the user can monitor the position following status of the motor by monitoring whether the position following error is within the error window. The drive provides 2 sets of such monitoring.

The position following error is the difference between the external pulse position command and the current position.

The position following error monitoring window range consists of a window threshold and a stabilization time. The user can select the output conditions for the position deviation monitoring status via parameters P6-23 and P6-25:

- 0 – External position commands are followed accurately, provided that the following condition is met:
  1. The position following error is within the in-position deviation window
- 1 – External target positions are located, provided that both of the following two conditions are met:
  1. No more external pulses are received
  2. The position following error is within the in-position deviation window
- 2 – External target positions are located and the output state is released after a period of latching, provided that both of the following conditions are met:
  1. No more external pulses are received
  2. The position following error is within the in-position deviation window

  The output state will be released after a period of latching.
- 3 – External position commands are followed accurately and stay stable for a period of time, provided that both of the following two conditions are met:
  1. The position following error is within the in-position deviation window
  2. The position following error is within the position deviation window and needs to stay stable for a period of time
- 4 – External target positions are located and stay stable for a period of time, provided that all of the following three conditions are met:
  1. No more external pulses are received
  2. The position following error is within the in-position deviation window
  3. The position following error is within the position deviation window and needs to stay stable for a period of time
- 5 – The overall positioning is done, provided that all of the following three conditions are met:
  1. No more external pulses are received
  2. The position following error is within the in-position deviation window
  3. The motor is at standstill

The drive can mark the monitoring status through an output terminal.

P6-22	Position monitoring: position following error range 1	Minimum value	0	Unit	Related control mode		
		Factory setting	128	usr_p	P	–	–
		Maximum value	2147483647		MS	S	–

Parameter function: **MODBUS address: 1662**

Monitoring of position deviation 1

The system verifies whether the drive is within the defined deviation during the period set with P6-26.

The status can be output via a parameterizable output.

Modified settings become active immediately.

P6-23	Position monitoring: Output mode 1 of position deviation monitoring	Minimum value	0	Unit	Related control mode		
		Factory setting	0	–	P	–	–
		Maximum value	5		MS	S	–

Parameter function: **MODBUS address: 1706**

0 / Position reached

1 / Command reached

2 / Command reached with output latched

3 / Position reached with time window

4 / Command reached with time window

5 / Motion finished

Modified settings become active immediately.

P6-24	Position monitoring: position following error range 2	Minimum value	0	Unit	Related control mode		
		Factory setting	128	usr_p	P	–	–
		Maximum value	2147483647		MS	S	–

Parameter function: **MODBUS address: 1700**

Monitoring of position deviation 2

The system verifies whether the drive is within the defined deviation during the period set with P6-29.

The status can be output via a parameterizable output.

Modified settings become active immediately.

P6-25	Position monitoring: Output mode 2 of position deviation monitoring	Minimum value	0	Unit	Related control mode		
		Factory setting	0	–	P	–	–
		Maximum value	5		MS	S	–

Parameter function: **MODBUS address: 1708**

0 / Position reached

1 / Command reached

2 / Command reached with output latched

3 / Position reached with time window

4 / Command reached with time window

5 / Motion finished

Modified settings become active immediately.

P6-26	Position monitoring: time window.	Minimum value	0	Unit	Related control mode		
		Factory setting	0	1 ms	P	–	–
		Maximum value	9999		MS	S	–

Parameter function: **MODBUS address: 1594**

Monitoring of time window.

Adjustment of a time for monitoring of position deviation. If the monitored value is in the permissible range during the adjusted time, the monitoring function delivers a positive result.

Modified settings become active immediately.

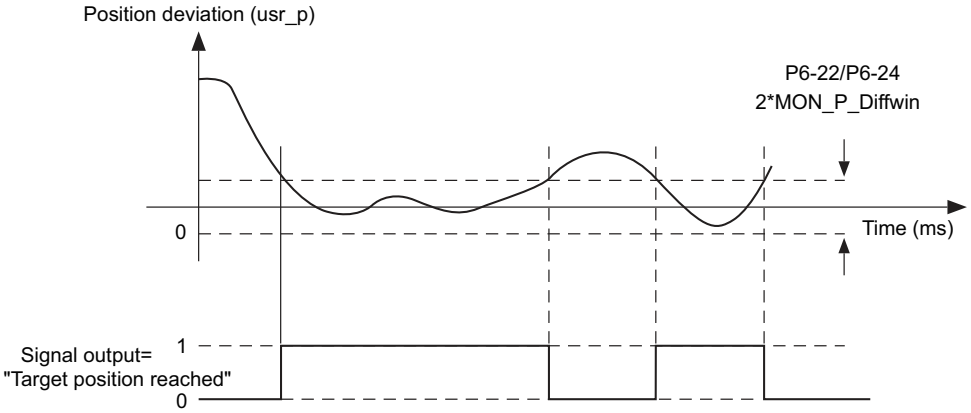

MON_P_Mode = 0 (P6-23/P6-25): Target position reached
When the position deviation of the target position reached is within the window, the signal output is set to on

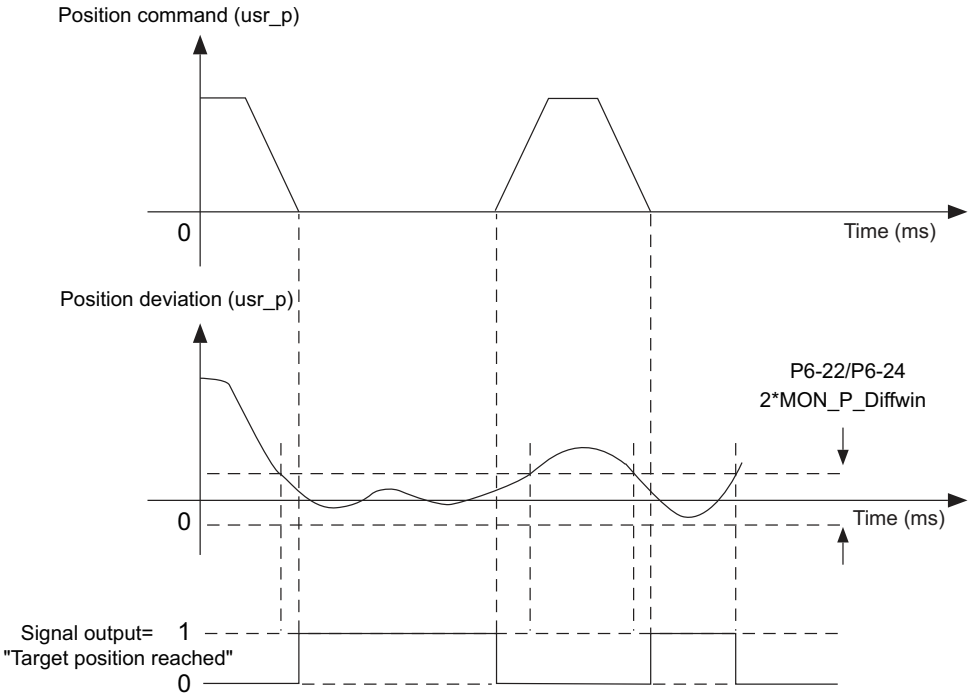

MON_P_Mode = 1 (P6-23/P6-25): No new command is received at the command position reached with output latched + position deviation within the window

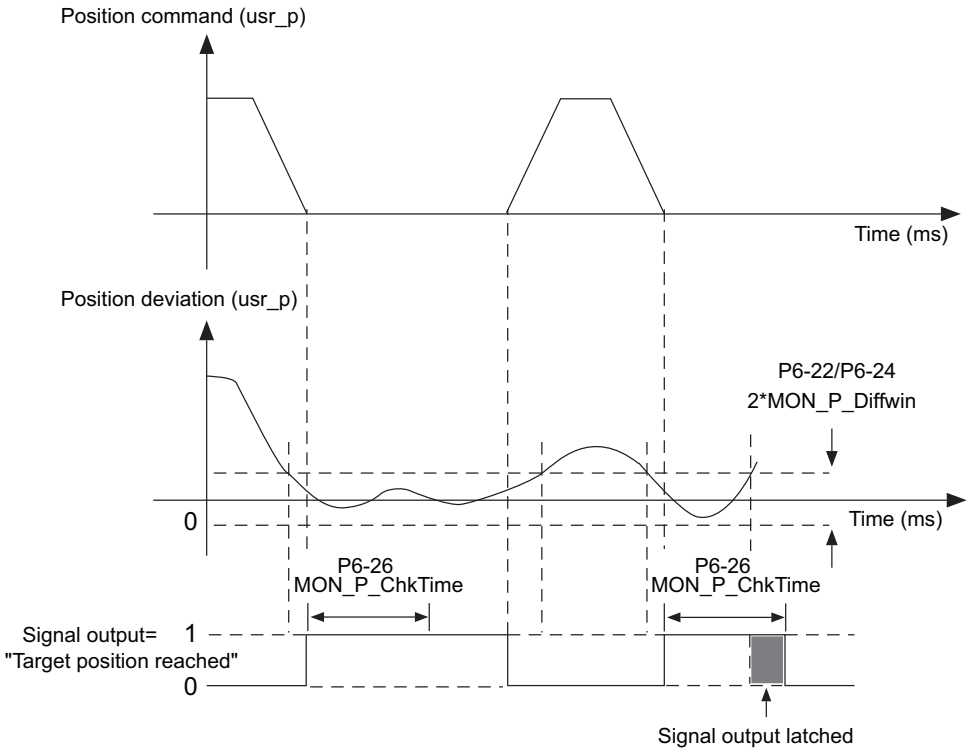

MON_P_Mode = 2 (P6-23/P6-25): The output signal will retain the time set by parameter when no new position command is received at the command position reached with output latched + position deviation within the window

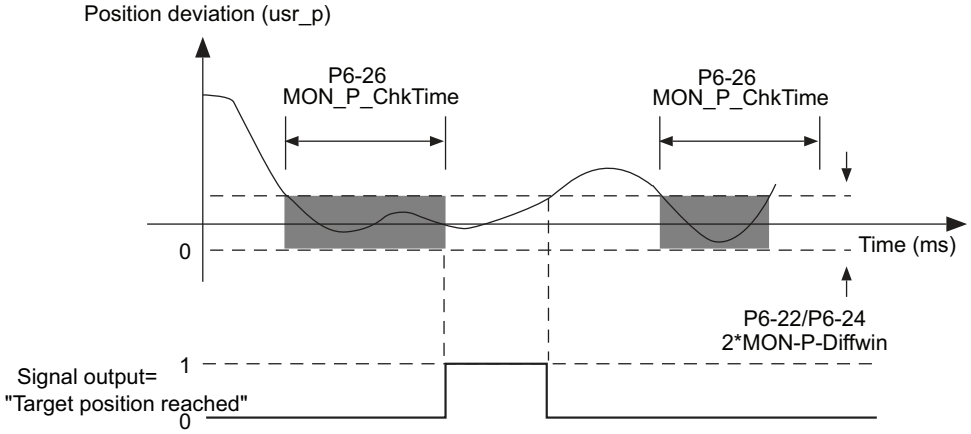

MON_P_Mode = 3 (P6-23/P6-25): The error of command position reached with time window is within the window, and the time set by parameter is retained

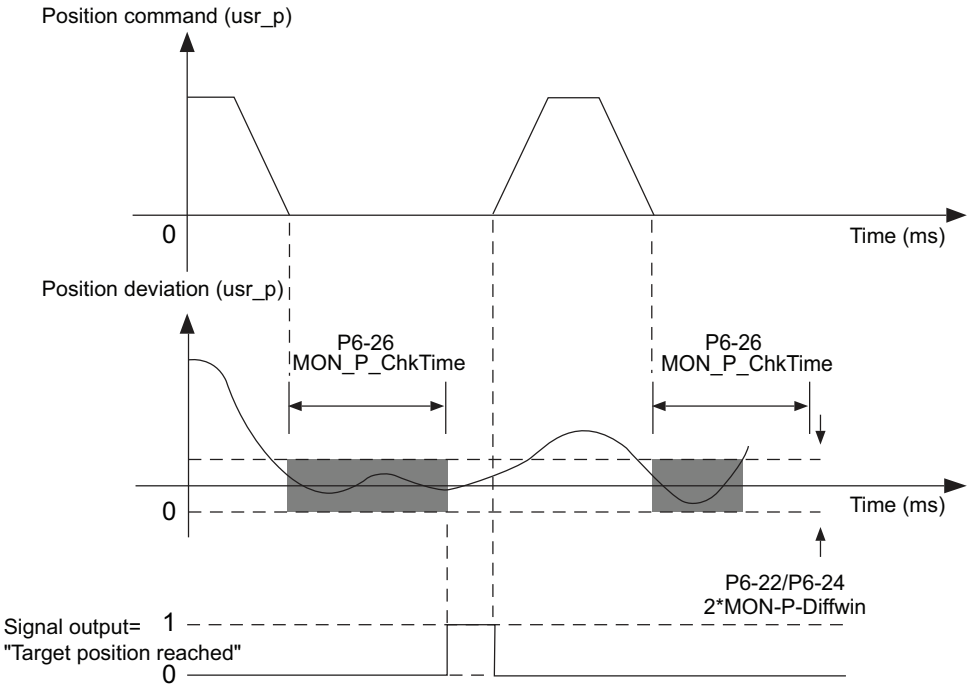

MON_P_Mode = 4 (P6-23/P6-25): No new position command is received by command position reached with time window + position error is within the window, and the time set by parameter is retained

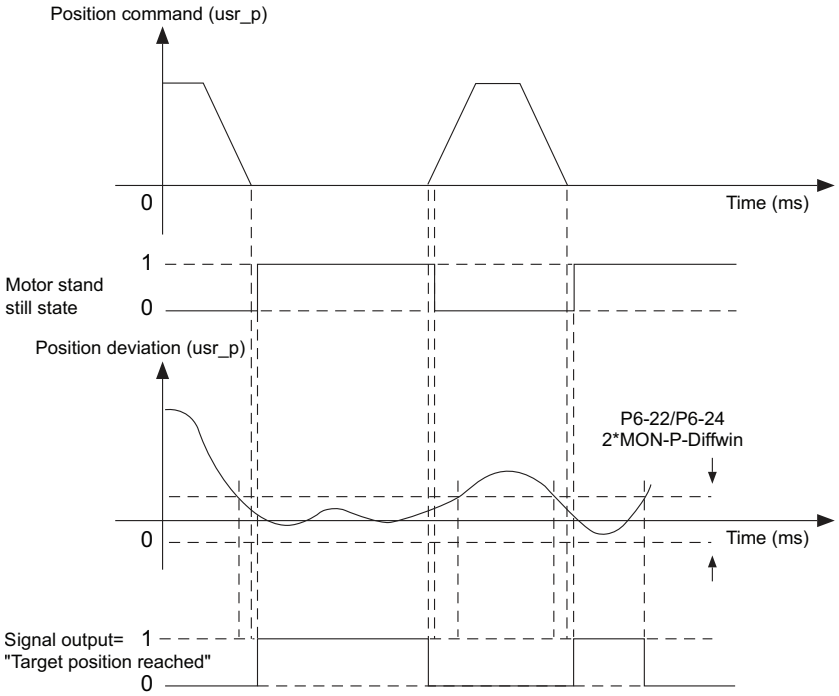

MON_P_Mode = 5 (P6-23/P6-25): Motion task completed
No new position command is received + motor is at standstill + position deviation is within the window

Velocity Control

In the velocity control mode, the servo drive controls the motor velocity according to the external input analog command or the internal preset velocity command of the drive.

Velocity Control Block Diagram

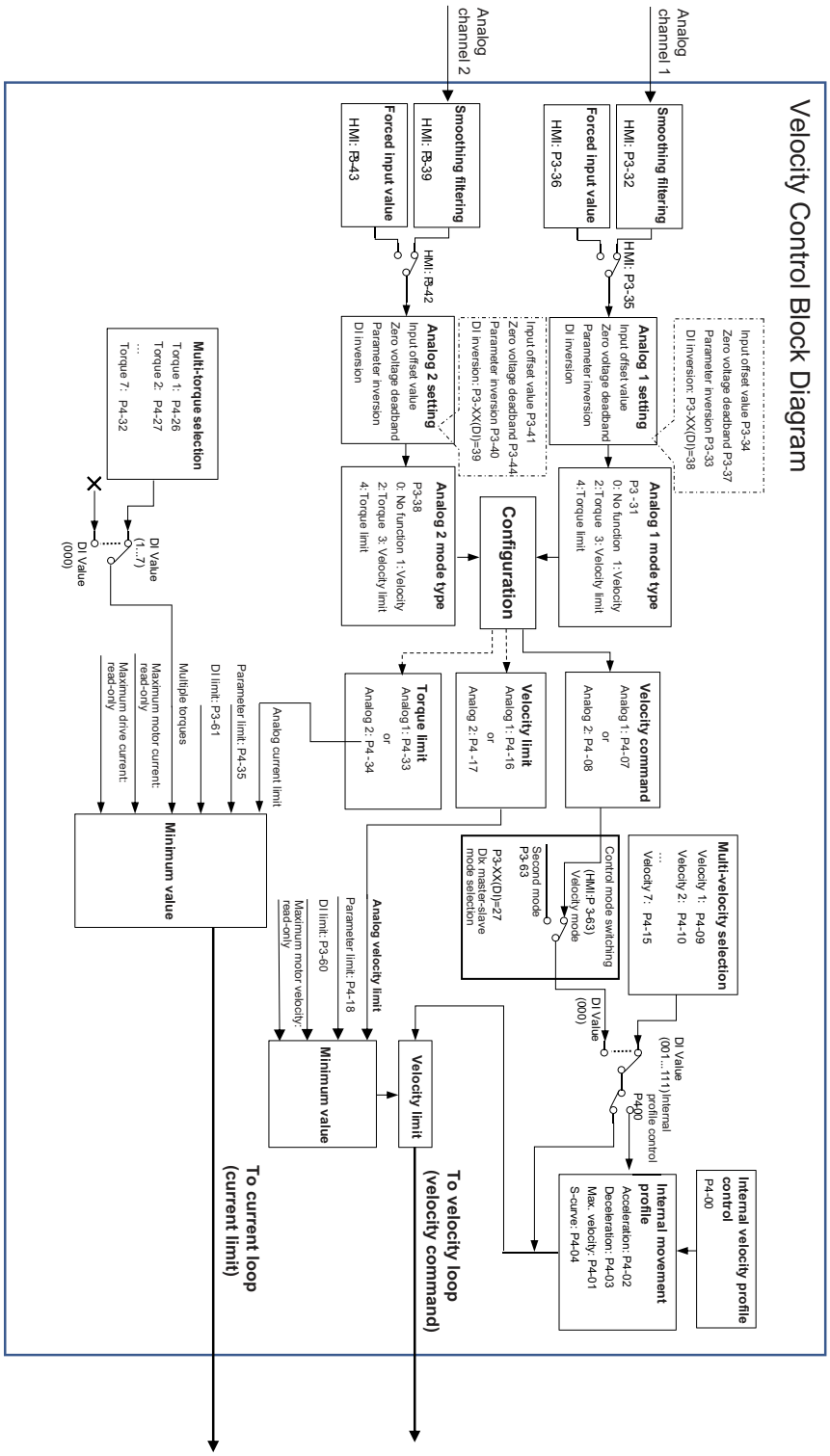

Command Selection for Velocity Control

The source of velocity commands consists of two categories: one is the analog voltages of external inputs and the other is internal parameters. The mode of selection is based on the DI signals of CN1, as shown in the following table:

Velocity command number	DI signals of CN1			Source of velocity commands			Description	Range
	INTVC-M2	INTVC-M1	INTVC-M0					
–	0	0	0	Mode	V	External analog	**Voltage difference between** V_REF and AGND	-10V ~+10V
					Vz	–	The velocity command is 0.	0
VELPRF_multi_vel_val1	0	0	1	Internal velocity command			P4-09	-2147483648~ 2147483647
VELPRF_multi_vel_val2	0	1	0				P4-10	-2147483648~ 2147483647
VELPRF_multi_vel_val3	0	1	1				P4-11	-2147483648~ 2147483647
VELPRF_multi_vel_val4	1	0	0				P4-12	-2147483648~ 2147483647
VELPRF_multi_vel_val5	1	0	1				P4-13	-2147483648~ 2147483647
VELPRF_multi_vel_val6	1	1	0				P4-14	-2147483648~ 2147483647
VELPRF_multi_vel_val7	1	1	1				P4-15	-2147483648~ 2147483647

- State of INTVCM0~INTVCM2: 0 means no inputs at the DI point, while 1 means inputs at the DI point.
- When INTVCM0 & INTVCM1 & INTVCM2= 0:
  - If the mode is Vz, the velocity command is 0. Therefore, when the user does not need to use external analog voltage as the velocity command source, the use of Vz mode can avoid the zero-drift problem of analog voltage.
  - If the mode is V, the velocity command is the external analog voltage difference between V_REF and AGND, the input voltage range is -10V ~ +10V, and the velocity corresponding to the voltage can be adjusted by parameter (P4-07/P4-08).
- When there are other combinations for INTVCM0 & INTVCM1 & INTVCM2, the velocity commands are internal velocity commands INTVCM1~ INTVCM7, with crresponding parameters P4-09~P4-15 The internal veocity command is active immediately after the state of INTVCM0 & INTVCM1& INTVCM2 is changed.

Analog Input Control

The Lexium18 supports two sets of analog input channels.

Analog Input Smoothing Filters

The analog input smoothing filter can be used to inhibit rapid changes in analog input signals or noise interference and provide the smoothing effect of analog commands.

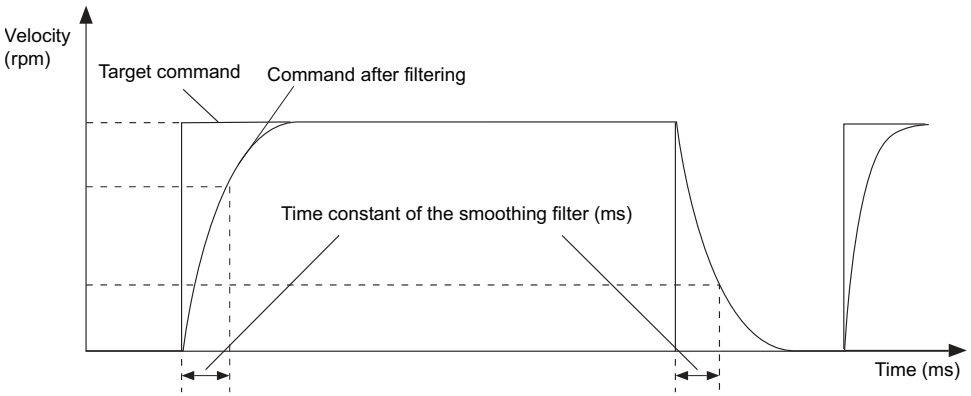

P3-32	Analog input 1: Time constant of input smoothing filter	Minimum value	0	Unit	Related control mode		
		Factory setting	0	0.01 ms	–	V / Vz	T / Tz
		Maximum value	32767		–	–	–

Parameter function: **MODBUS address: 2308**

Time constant of input smoothing filter 1

0: Disable the function.

Other values: Smoothing filter time constant.

In increments of 0.01 ms.

Modified settings become active immediately.

P3-39	Analog input 2: Time constant of input smoothing filter	Minimum value	0	Unit	Related control mode		
		Factory setting	0	0.01 ms	–	V / Vz	T / Tz
		Maximum value	32767		–	–	–

Parameter function: **MODBUS address: 2352**

Time constant of input smoothing filter 2

0: Disable the function.

Other values: Smoothing filter time constant.

In increments of 0.01 ms.

Modified settings become active immediately.

Zero-drift Compensation for Analog Inputs

When analog inputs are used as the velocity command source, the servo motor may rotate at a low speed even if the analog velocity command is 0V. This is due to a minor drift in the velocity command received by the drive through the analog input channel. This minor velocity command drift is called “zero drift”.

This drift can be eliminated by the analog input zero drift compensation function.

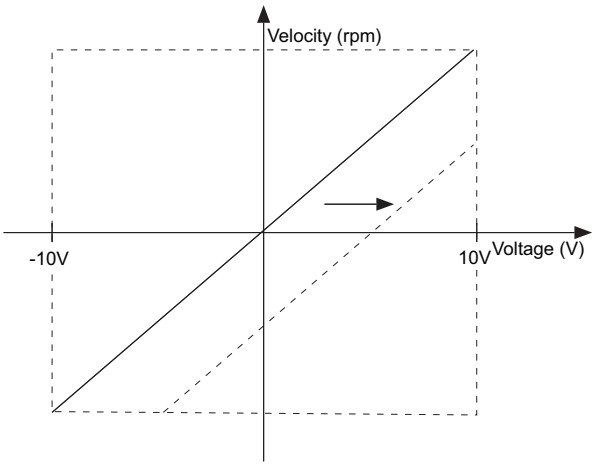

There are two ways to compensate for analog input zero drift: manual compensation and automatic compensation:

- Manually compensate for analog input zero drift
  1. Ensure that the analog voltage command from the host controller output is 0V.
  2. You can read the actual analog input voltage command received at the servo drive side through the monitoring function of the analog input voltage in the parameter set MON of the servo drive, or through the monitoring function of the SoMove commissioning software of the host controller.
  3. Enter the opposite voltage value in the zero-drift offset inhibition parameter (P3-34/P3-41)of the corresponding analog input channel.
- Automatically compensate for analog input zero drift
  1. The servo drive should be in Servo-off state.
  2. Ensure that the analog voltage command from the host controller output is 0V.
  3. Activate automatic zero-drift compensation via the servo drive panel parameter set [OP] - [Tun-] - [AICMP].

Compensation for the analog input zero drift is achieved by modifying the values of the following parameters.

P3-34	**Analog input 1: Input offset value**	**Minimum value**	**-5000**	**Unit**	**Related control mode**		
		Factory setting	**0**	**1 mV**	**–**	**V / Vz**	**T / Tz**
		Maximum value	**5000**		**–**	**–**	**–**
Parameter function:			**MODBUS address: 2326**				
Input offset value of analog input 1 Actual value of analog input 1 = Input voltage of analog input 1 - input offset value of analog input 1. **Modified settings become active immediately.**							

P3-41	Analog input 2: Input offset value	Minimum value	-5000	Unit	Related control mode		
		Factory setting	0	1 mV	–	V / Vz	T / Tz
		Maximum value	5000		–	–	–

Parameter function: **MODBUS address: 2328**

Input offset value of analog input 2

Actual value of analog input 2 = Input voltage of analog input 2 - input offset value of analog input 2.

Modified settings become active immediately.

Setting the Analog Input Deadband

When analog inputs are used as the velocity command source, you can set a threshold for the deadband window of the input voltage. The servo drive will treat the analog input voltage within the threshold of this window as 0V.

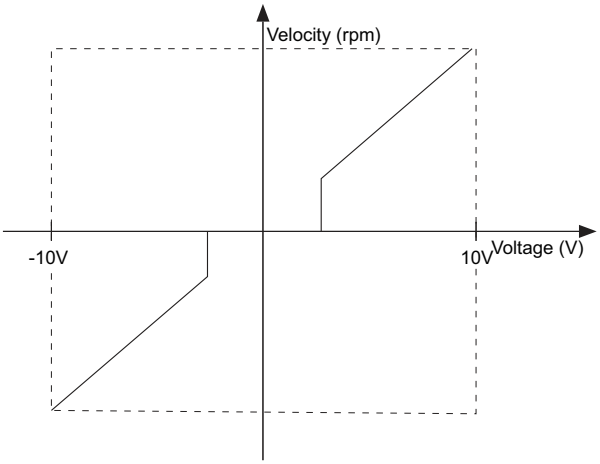

P3-37	Analog input 1: Zero voltage deadband window	Minimum value	0	Unit	Related control mode		
		Factory setting	0	1 mV	–	V / Vz	T / Tz
		Maximum value	1000		–	–	–

Parameter function: **MODBUS address: 2322**

Zero voltage dead zone window of analog input 1

The servo drive will treat the analog input voltage within the threshold of this window as 0V.

Modified settings become active immediately.

P3-44	Analog input 2: Zero voltage deadband window	Minimum value	0	Unit	Related control mode		
		Factory setting	0	1 mV	–	V / Vz	T / Tz
		Maximum value	1000		–	–	–

Parameter function: **MODBUS address: 2324**

Zero voltage dead zone window of analog input 2

The servo drive will treat the analog input voltage within the threshold of this window as 0V.

Modified settings become active immediately.

Forced Analog Input

Instead of a given external voltage input, an analog voltage input value can be forced directly by parameter. Both the analog voltage zero-drift bias and the deadband settings work for the forced analog inputs.

The user can switch between the use of an external analog voltage input value or the use of a forced analog input value via a parameter.

P3-35	Analog input 1: Use forced analog voltage input value	Minimum value	0	Unit	Related control mode		
		Factory setting	0	–	–	V / Vz	T / Tz
		Maximum value	1		–	–	–

Parameter function: **MODBUS address: 2310**

0: No forced value used.

1: Forced value used;

Modified settings become active immediately.

P3-36	Analog input 1: Forced analog voltage input value	Minimum value	-10000	Unit	Related control mode		
		Factory setting	0	1 mV	–	V / Vz	T / Tz
		Maximum value	10000		–	–	–

Parameter function: **MODBUS address: 2312**

Forced analog voltage values are active when P3-35 is 1.

Modified settings become active immediately.

P3-42	Analog input 2: Use forced analog voltage input value	Minimum value	0	Unit	Related control mode		
		Factory setting	0	–	–	V / Vz	T / Tz
		Maximum value	1		–	–	–

Parameter function: **MODBUS address: 2318**

0: No forced value used.

1: Forced value used;

Modified settings become active immediately.

P3-43	Analog input 2: Forced analog voltage input value	Minimum value	-10000	Unit	Related control mode		
		Factory setting	0	1 mV	–	V / Vz	T / Tz
		Maximum value	10000		–	–	–

Parameter function: **MODBUS address: 2320**

Forced analog voltage values are active when P3-42 is 1.

Modified settings become active immediately.

Analog Input Voltage Value Inversion

The analog input voltage value inversion function allows you to inverse the actual value of the analog input voltage. The actual analog voltage value is the actual input voltage after the correction of the analog input offset value and analog input deadband.

P3-33	Analog input 1: Voltage value is inversed	Minimum value	0	Unit	Related control mode		
		Factory setting	0	–	–	V / Vz	T / Tz
		Maximum value	1		–	–	–

Parameter function: **MODBUS address: 2362**

0 / Inversion Off: Voltage value is not inversed.

1 / Inversion On: Voltage value is inversed.

Modified settings become active immediately.

P3-40	Analog input 2: Voltage value is inversed	Minimum value	0	Unit	Related control mode		
		Factory setting	0	–	–	V / Vz	T / Tz
		Maximum value	1		–	–	–

Parameter function: **MODBUS address: 2364**

0 / Inversion Off: Voltage value is not inversed.

1 / Inversion On: Voltage value is inversed.

Modified settings become active immediately.

Analog Input Functions

The user can select analog input functions by parameter.

Selecting Analog Input Functions

In profile velocity, the function selection of analog inputs allows the input value of analog voltage to be assigned as target velocity or torque limitation.

P3-31	Analog input 1: Input function	Minimum value	0	Unit	Related control mode		
		Factory setting	(Related to mode)	–	–	V / Vz	T / Tz
		Maximum value	4		–	–	–

Parameter function: **MODBUS address: 2332**

0 / No function: No function.

1 / Target Velocity: Target velocity in profile velocity.

2 / Target Torque: Target torque in profile torque.

3 / Velocity Limitation: Velocity limitation in profile velocity or profile torque.

4 / Torque Limitation: Torque limitation in profile velocity or profile torque.

Setting can only be modified if power stage is disabled.

Modified settings become active immediately.

P3-38	Analog input 2: Input function	Minimum value	0	Unit	Related control mode		
		Factory setting	(Mode dependent)	–	–	V / Vz	T / Tz
		Maximum value	4		–	–	–

Parameter function: **MODBUS address: 2342**

0 / No function: No function.

1 / Target Velocity: Target velocity in profile velocity.

2 / Target Torque: Target torque in profile torque.

3 / Velocity Limitation: Velocity limitation in profile velocity or profile torque.

4 / Torque Limitation: Torque limitation in profile velocity or profile torque.

Setting can only be modified if power stage is disabled.

Modified settings become active immediately.

In profile velocity, the default function of the analog input channel 1 is 1/target velocity, and the default function of the analog input channel 2 is 0/no function.

The two sets of analog channels cannot be assigned with the same functions.

Setting Analog Input Gains

When the analog input voltage is used as a velocity command, the relationship between the analog voltage command and the velocity command is related by the analog input gain parameter.

This parameter describes the velocity command represented by the 10V analog input voltage in profile velocity, from which the velocity commands represented by other analog input voltages can be linearly derived.

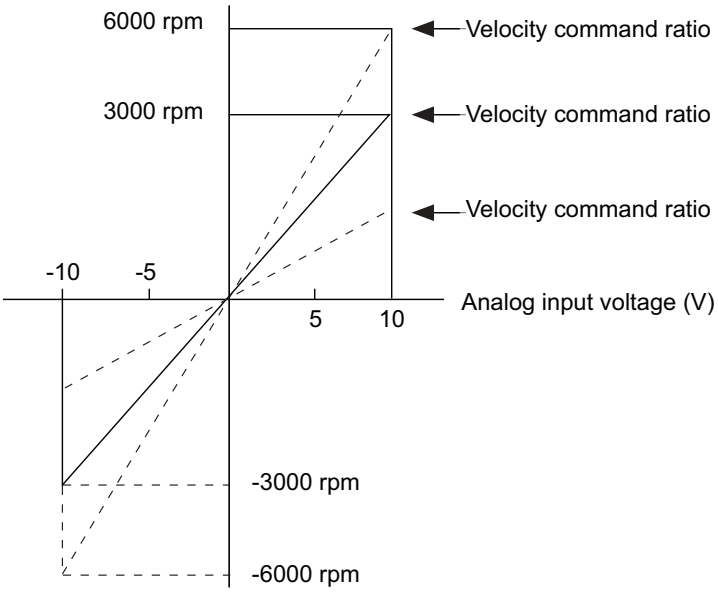

The proportional relation of the velocity command to the analog is set by the parameter of velocity command ratio

P4-07	Analog input 1: Velocity command represented by the 10V analog input in Profile Velocity	Minimum value	-2147483648	Unit	Related control mode		
		Factory setting	6000	usr_v	–	V / Vz	–
		Maximum value	2147483647		–	–	–
Parameter function:			MODBUS address: 2338				

Velocity command represented by 10 V analog input in Profile Velocity and velocity command represented by other analog input voltages can be obtained through the linear calculation.

Modified settings become active immediately.

P4-08	Analog input 2: Velocity command represented by the 10V analog input in Profile Velocity	Minimum value	-2147483648	Unit	Related control mode		
		Factory setting	6000	usr_v	–	V / Vz	–
		Maximum value	2147483647		–	–	–
Parameter function:			MODBUS address: 2348				

Velocity command represented by 10 V analog input in Profile Velocity and velocity command represented by other analog input voltages can be obtained through the linear calculation.

Modified settings become active immediately.

Smoothing function

Velocity Profile Limitation

In profile velocity, the user can limit the velocity profile by parameter:

- When internal parameters are used as velocity commands, the velocity profile can be limited by parameters for acceleration, deceleration, and maximum velocity.
- When the analog input voltage is used as a velocity command, the velocity profile can be limited by parameters for acceleration and deceleration only.

P4-00	Activation of the motion profile for velocity.	Minimum value	0	Unit	Related control mode		
		Factory setting	1	–	P	V / Vz	–
		Maximum value	1		–	S	–

Parameter function: **MODBUS address: 1622**

Activation of the motion profile for velocity.

0 / Profile Off: Profile off

1 / Profile On: Profile on

Setting can only be modified if power stage is disabled.

Modified settings become active immediately.

P4-01	Maximum velocity of the motion profile for velocity.	Minimum value	1	Unit	Related control mode		
		Factory setting	13200	usr_v	P	V / Vz	–
		Maximum value	2147483647		–	S	–

Parameter function: **MODBUS address: 1554**

Maximum velocity of internal motion of the drive

If a greater reference velocity is set in one of these operating modes, it is automatically limited to this parameter.

Setting can only be modified if power stage is disabled.

Modified settings become active immediately.

P4-02	Acceleration of the motion profile for velocity.	Minimum value	1	Unit	Related control mode		
		Factory setting	6000	usr_a	–	V / Vz	–
		Maximum value	2147483647		MS	S	–

Parameter function: **MODBUS address: 1556**

Acceleration of the motion profile for velocity.

In any motion profile for velocity, the acceleration set via this parameter will be used.

If the acceleration of the velocity command is greater than the value set via this parameter when the analog input voltage is used as the velocity command, the acceleration of the actual motion will be automatically limited to the acceleration set via this parameter

Modified settings become active the next time the motor moves.

P4-03	Deceleration of motion profile of the drive	Minimum value	1 or 120	Unit	Related control mode		
		Factory setting	6000	usr_a	–	V / Vz	–
		Maximum value	2147483647		MS	S	–

Parameter function:	MODBUS address: 1558

Deceleration of motion profile of the drive

In any mode motion profile for velocity, the deceleration set in this parameter is used.

If the deceleration of the velocity command is greater than the value set in this parameter when the analog input voltage is used as a velocity command, the deceleration of the actual movements is automatically limited to the deceleration set in this parameter.

Operating mode with a minimum value of 1:

- Gear
- Profile Velocity
- MS (Move Velocity)

Operating mode with a minimum value of 120:

- Jog
- Profile Position
- Homing
- MS (Move absolute / Move additive / Move relative / Reference movement)

Modified settings become active the next time the motor moves.

“S-curve” Function

When internal parameters are used as velocity commands, the user can activate the “S-curve"” filter function to improve the smoothing performance during acceleration and deceleration. The “S-curve” filter function allows you to set the percentage of S-shaped smooth curves during acceleration and deceleration of the drive with internal movements, up to 100%. This function will re-plan the ramp of the acceleration and deceleration ramps to ensure that the total time of the acceleration and deceleration motion profile remain unchanged.

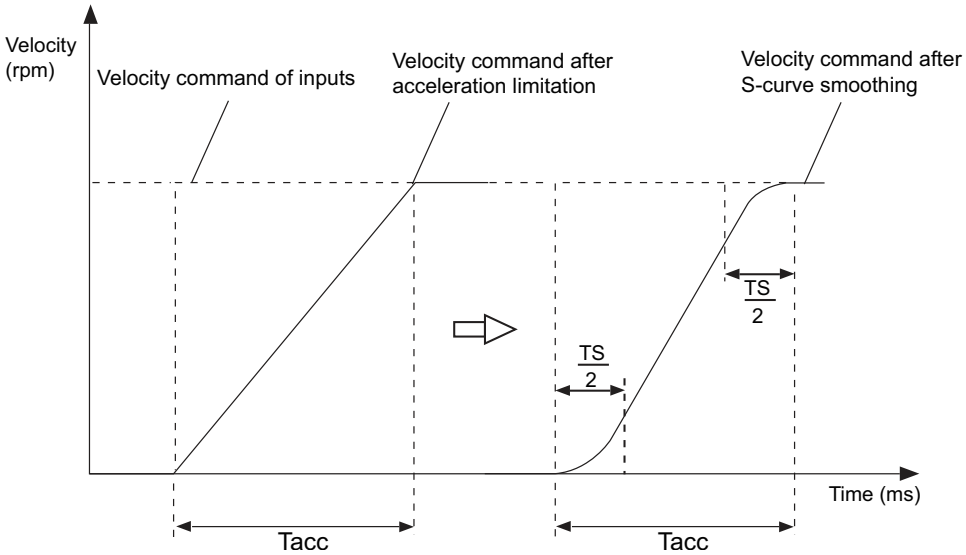

P4-04	S-curve setting of motion profile command for velocity	Minimum value	0	Unit	Related control mode		
		Factory setting	0	1%	P	V / Vz	–
		Maximum value	100		–	S	–

Parameter function: **MODBUS address: 1692**

S-curve setting of motion profile command for velocity

When using an internal curve as the velocity command, the smoothing performance of acceleration and deceleration process is improved by setting the proportion of the S-shaped smooth curve during the acceleration and deceleration of motion profile for velocity.

This function will re-plan the ramp of the acceleration and deceleration ramps to ensure that the total time of the acceleration and deceleration motion profile remain unchanged.

Modified settings become active the next time the motor moves.

Moving Averaging Filter Function

When the analog input voltage is used as the velocity command, fast transformation of the analog input voltage velocity command is smoothed by enabling the moving averaging filter function. For example, a square waveform velocity command is smoothed to a trapezoidal velocity command via a moving average filter.

The use of a moving average filter introduces a hysteresis into the analog input voltage velocity command.

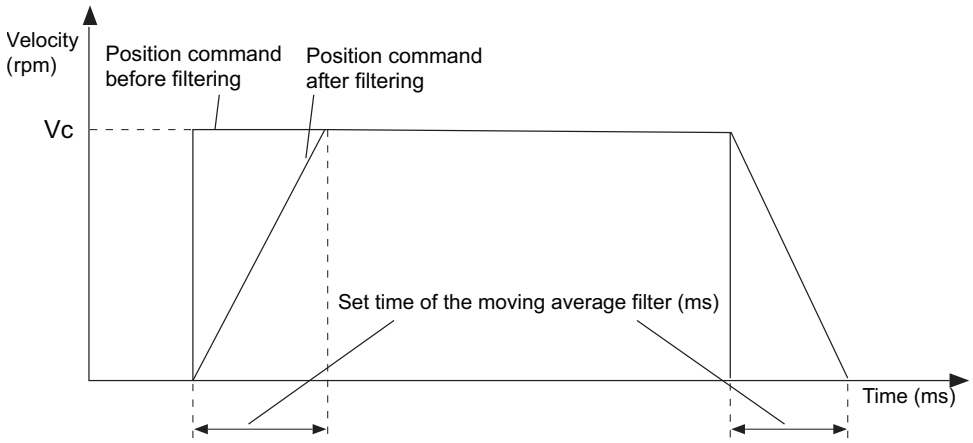

P1-29	Moving average filtering of analog velocity commands	Minimum value	0	Unit	Related control mode		
		Factory setting	0	0.1 ms	–	V / Vz	–
		Maximum value	128		–	–	–

Parameter function: **MODBUS address: 4476**

Moving average filtering of analog velocity commands

When the analog input voltage is used as the velocity command, the fast transformation of the analog input voltage velocity command is smoothed by the moving averaging filter function.

The use of a moving average filter introduces a hysteresis into the analog input voltage velocity command.

Modified settings become active the next time the motor moves.

Velocity Loop Command Low-pass Filters

You can use the velocity loop command low-pass filter to attenuate high-frequency noise on the velocity loop command, thereby reducing velocity fluctuations, and at the same time providing a smoothing effect on the velocity loop command.

The use of a velocity loop command low-pass filter reduces the responsive bandwidth of the velocity loop.

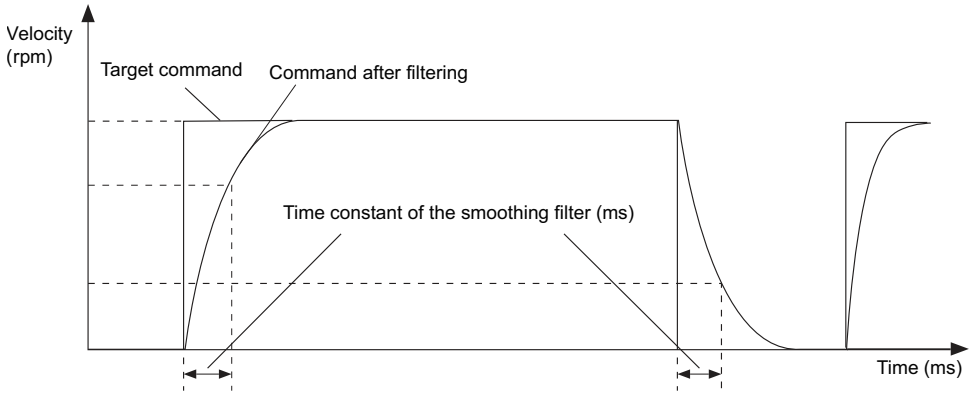

P1-04	Control parameter set 1: Time constant of velocity loop command filter	Minimum value	0	Unit	Related control mode		
		Factory setting	0	0.01 ms	P	V / Vz	–
		Maximum value	32767		MS	S	–

Parameter function: **MODBUS address: 4616**

The low-pass filter of the velocity loop command can be used to attenuate the high-frequency noise on the velocity loop command, thereby reducing the velocity fluctuation.

In increments of 0.01 ms.

Modified settings become active immediately.

P1-11	Control parameter set 2: Time constant of velocity loop command filter	Minimum value	0	Unit	Related control mode		
		Factory setting	0	0.01 ms	P	V / Vz	–
		Maximum value	32767		MS	S	–

Parameter function: **MODBUS address: 4872**

The low-pass filter of the velocity loop command can be used to attenuate the high-frequency noise on the velocity loop command, thereby reducing the velocity fluctuation.

In increments of 0.01 ms.

Modified settings become active immediately.

Special Functions

Zero Clamp Function

The zero clamp function allows the motor velocity command to be forced to 0.

The velocity conditions for the zero clamp function to be activated can be selected by parameter. In addition, it is possible to parameterize whether a velocity loop or a position loop will be constructed inside the drive after the servo motor shaft is locked.

The zero clamp function is activated by the input points with the ZCLAMP function configured and is level triggered.

P4-19	Zero clamp mode	Minimum value	0	Unit	Related control mode		
		Factory setting	0	–	–	V / Vz	T / Tz
		Maximum value	4		MS	S	–

Parameter function: **MODBUS address: 1690**

Zero clamp mode

0 / Clamp invalid

1 / Motor locked when limitation reached in Profile Velocity: After DI is triggered, the motor continues to follow the instructions until the motor velocity is lower than the velocity threshold and the clamp velocity reaches 0 and is locked in the Profile Velocity.

2 / Motor locked when limitation reached in Position Mode: After DI is triggered, the motor continues to follow the instructions until the motor velocity is lower than the velocity threshold and the clamp velocity reaches 0 and is locked in the Position Mode.

3 / Motor locked immediately in Profile Velocity: After DI is triggered, the velocity command is immediately clamped to 0, the velocity command is sent to the velocity loop as a velocity command after being filtered via the parameter P4-21, and the motor is switched to the Profile Velocity when the actual motor velocity is lower than the velocity threshold.

4 / After DI is triggered, the velocity command is immediately clamped to 0, the velocity command is sent to the velocity loop as a velocity command after being filtered via the parameter P4-21, and the motor is switched to the position mode when the actual motor velocity is lower than the velocity threshold.

Setting can only be modified if power stage is disabled.

Modified settings become active immediately.

P4-20	Velocity limit for Zero Clamp.	Minimum value	0	Unit	Related control mode		
		Factory setting	10	usr_v	–	V / Vz	T / Tz
		Maximum value	2147483647		MS	S	–

Parameter function: **MODBUS address: 1616**

Velocity limit for Zero Clamp.

A Zero Clamp operation is only possible if the reference velocity is below the Zero Clamp velocity limit.

Modified settings become active immediately.

Monitoring Functions

Target Velocity Monitoring

When internal parameters are used as velocity commands, the user can monitor whether the motor reaches the target velocity.

The motor is considered to have reached the target velocity when it is in the monitoring window for target velocity reached and stabilizes for a period of time.

The drive can indicate the monitoring status through an output terminal.

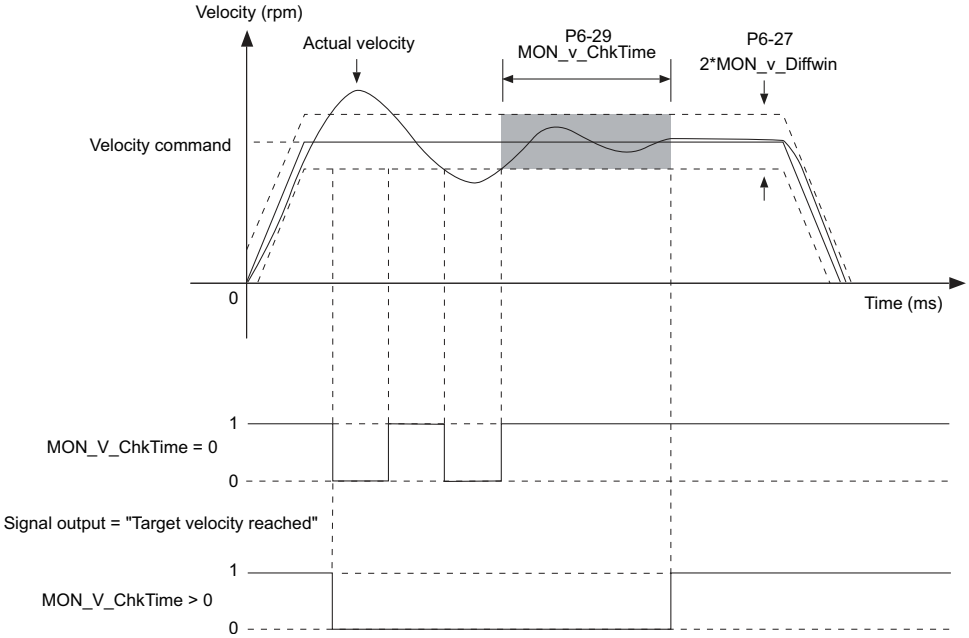

P6-18	Velocity window, permissible deviation	Minimum value	1	Unit	Related control mode		
		Factory setting	10	usr_v	–	V / Vz	–
		Maximum value	2147483647		MS	S	–

Parameter function: **MODBUS address: 1576**

Velocity window, permissible deviation

The control deviation for the standstill window time must be within this range for a standstill of the drive to be detected. Processing of the standstill window must be activated via P6-19.

Modified settings become active immediately.

P6-19	Velocity window, time.	Minimum value	0	Unit	Related control mode		
		Factory setting	0	1 ms	–	V / Vz	–
		Maximum value	16383		MS	S	–

Parameter function: **MODBUS address: 1578**

Velocity window, time.

Value 0: Velocity window monitoring deactivated

Value > 0: Time in ms during which the control deviation must be in the standstill window.

Modified settings become active immediately.

Velocity Following Error Monitoring

The user can monitor whether the velocity following error of the motor is in the deviation window.

When the velocity deviation of the motor is less than the monitoring threshold and remains for a certain period of time, the velocity following error of the motor is considered to be within the range. The drive can indicate the monitoring status through an output terminal.

The velocity deviation of the motor is the difference between the current command velocity and the actual velocity.

The drive can indicate the monitoring status through an output terminal.

P6-27	Monitoring of velocity deviation.	Minimum value	1	Unit	Related control mode		
		Factory setting	10	usr_v	–	V / Vz	–
		Maximum value	2147483647		MS	S	–

Parameter function: **MODBUS address: 1588**

Monitoring of velocity deviation.

The system monitors whether the drive is within the defined deviation during the period set with P6-29.

The status can be output via a parameterizable output.

Modified settings become active immediately.

P6-29	Velocity monitoring: Monitoring window time	Minimum value	0	Unit	Related control mode		
		Factory setting	0	1 ms	–	V / Vz	–
		Maximum value	9999		MS	S	–

Parameter function: **MODBUS address: 1696**

Monitoring of time window.

Adjustment of a time for monitoring of velocity deviation and threshold. If the monitored value is in the permissible range during the adjusted time, the monitoring function delivers a positive result.

Modified settings become active immediately.

Velocity Threshold Monitoring

The user can set a velocity monitoring threshold and monitor whether the motor exceeds or falls below this velocity threshold.

When the motor exceeds or falls below the velocity threshold and remains for a certain period of time, the motor is considered to be exceeding or falling below this threshold.

The drive can indicate the monitoring status through an output terminal.

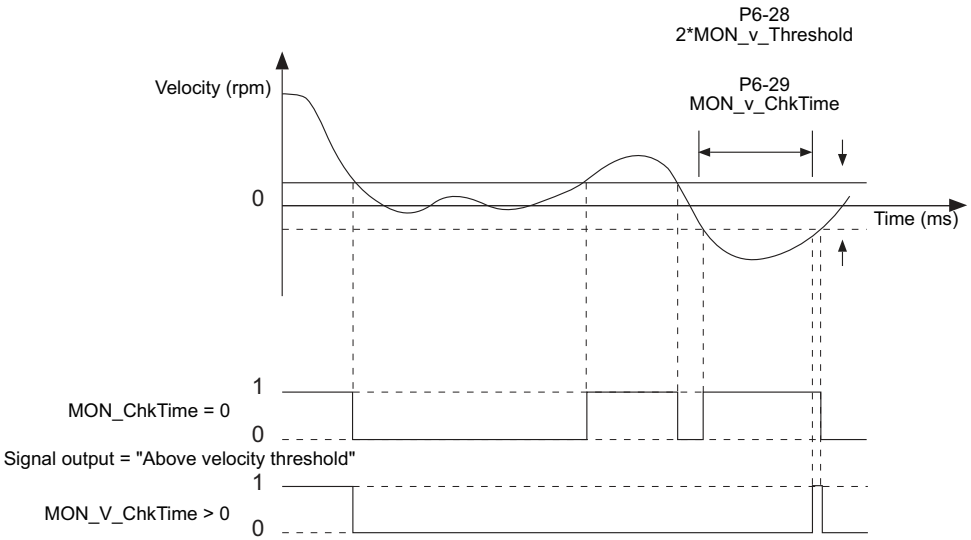

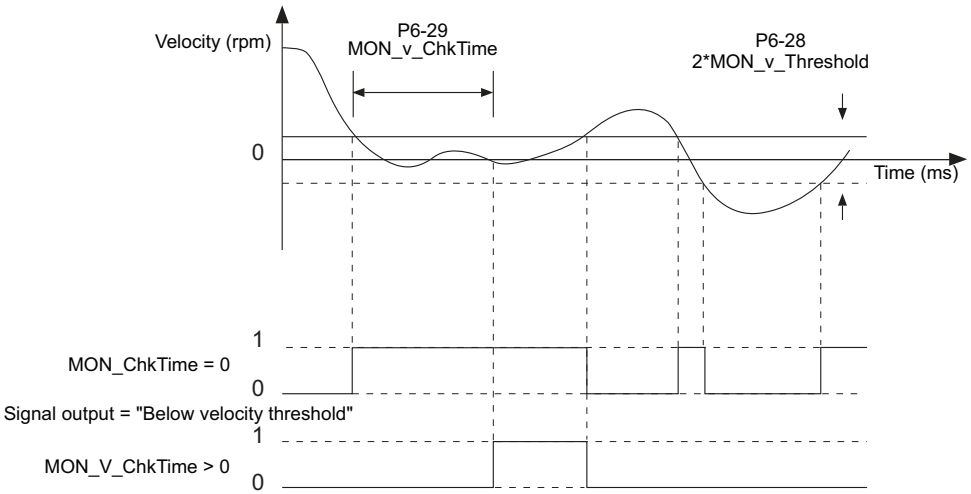

P6-28	Monitoring of velocity threshold	Minimum value	1	Unit	Related control mode		
		Factory setting	10	usr_v	–	V / Vz	–
		Maximum value	2147483647		MS	S	–

Parameter function:	MODBUS address: 1590

Monitoring of velocity threshold

The system monitors whether the drive is below the defined value during the period set with P6-29.

The status can be output via a parameterizable output.

Modified settings become active immediately.

P6-29	Velocity monitoring: Monitoring window time	Minimum value	0	Unit	Related control mode		
		Factory setting	0	1 ms	–	V / Vz	–
		Maximum value	9999		MS	S	–

Parameter function:	MODBUS address: 1696

Monitoring of time window.

Adjustment of a time for monitoring of velocity deviation and threshold. If the monitored value is in the permissible range during the adjusted time, the monitoring function delivers a positive result.

Modified settings become active immediately.

Torque Control

In the torque control mode, the servo drive controls the torque output of the motor according to the external input analog command or the internal preset torque command of the drive.

Torque Control Block Diagram

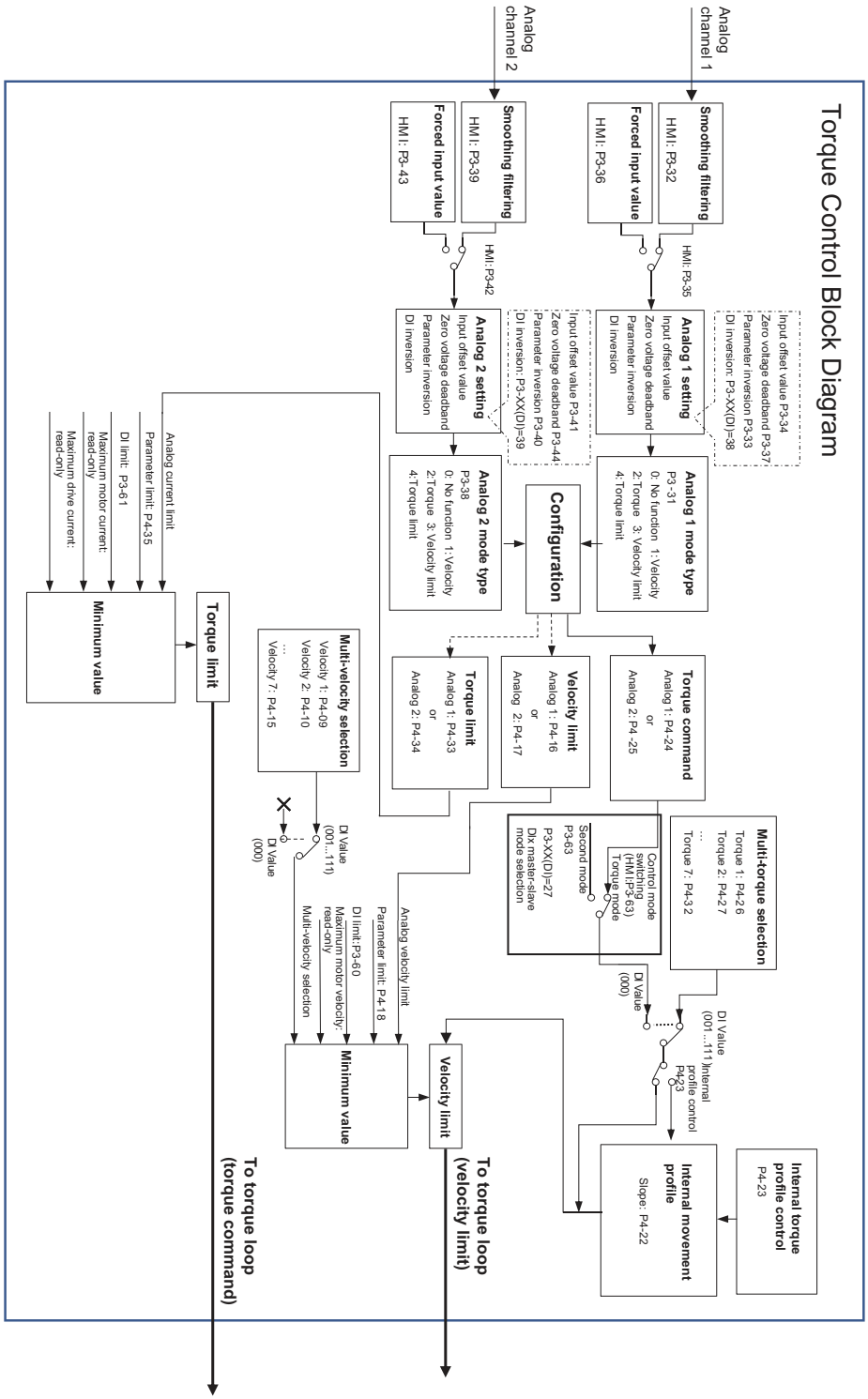

Command Selection for Torque Control

The source of torque commands consists of two categories: one is the analog voltages of external inputs and the other is internal parameters. The mode of selection is based on the DI signals of CN1, as shown in the following table:

Torque command number	DI signals of CN1			Source of torque commands			Description	Range
	INTTCM2	INTTCM1	INTTCM0					
-	0	0	0	Mode	T	External analog	**Voltage difference between** AI and AGND	-10V ~+10V
					Tz	-	The torque command is 0	0
TRQPRF_multi_trq_val1	0	0	1	Internal torque command			P4-26	-30000~ 30000
TRQPRF_multi_trq_val2	0	1	0				P4-27	-30000~ 30000
TRQPRF_multi_trq_val3	0	1	1				P4-28	-30000~ 30000
TRQPRF_multi_trq_val4	1	0	0				P4-29	-30000~ 30000
TRQPRF_multi_trq_val5	1	0	1				P4-30	-30000~ 30000
TRQPRF_multi_trq_val6	1	1	0				P4-31	-30000~ 30000
TRQPRF_multi_trq_val7	1	1	1				P4-32	-30000~ 30000

State of INTTCM0~INTTCM2: 0 means no inputs at the DI point, while 1 means inputs at the DI point.

When INTTCM0 & INTTCM1 & INTTCM2= 0:

- If the mode is Tz, the torque command is 0. Therefore, when the user does not need to use external analog voltage as the torque command source, the use of Tz mode can avoid the zero-drift problem of analog voltage.
- If the mode is T, the torque command is the external analog voltage difference between AI and AGND, the input voltage range is -10V ~ +10V, and the torque corresponding to the voltage can be adjusted by parameter (P4-23/P4-24).

When there are other combinations for INTTCM0 & INTTCM1 & INTTCM2, the torque commands are internal torque commands INTTCM1~ INTTCM7. The internal torque command is active immediately after the state of INTTCM0 & INTTCM1& INTTCM2 is changed.

The internal torque command parameter settings ranges from -30000 to 30000 in 0.1 %.

Analog Input Control

The Lexium18 supports two sets of analog input channels.

Analog Input Smoothing Filters

The analog input smoothing filter can be used to inhibit rapid changes in analog input signals or noise interference and provide the smoothing effect of analog commands.

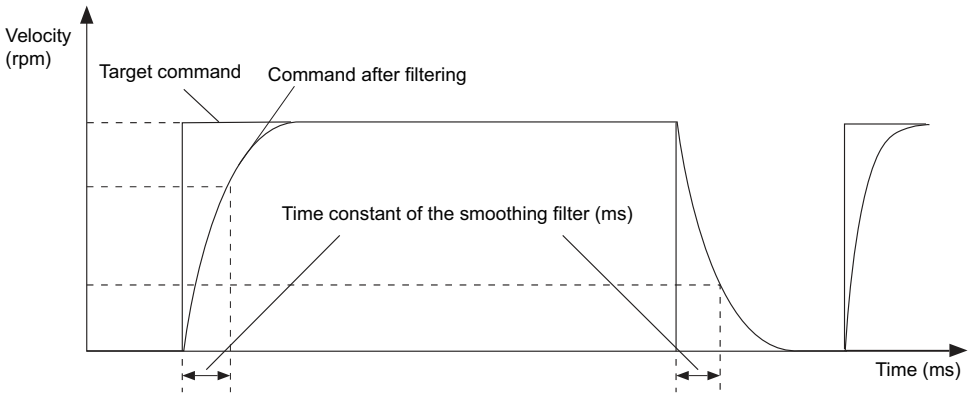

P3-32	Analog input 1: Time constant of input smoothing filter	Minimum value	0	Unit	Related control mode		
		Factory setting	0	0.01 ms	–	V / Vz	T / Tz
		Maximum value	32767		–	–	–

Parameter function: **MODBUS address: 2308**

Time constant of input smoothing filter 1

0: Disable the function.

Other values: Smoothing filter time constant.

In increments of 0.01 ms.

Modified settings become active immediately.

P3-39	Analog input 2: Time constant of input smoothing filter	Minimum value	0	Unit	Related control mode		
		Factory setting	0	0.01 ms	–	V / Vz	T / Tz
		Maximum value	32767		–	–	–

Parameter function: **MODBUS address: 2352**

Time constant of input smoothing filter 2

0: Disable the function.

Other values: Smoothing filter time constant.

In increments of 0.01 ms.

Modified settings become active immediately.

Zero-drift Compensation for Analog Inputs

When analog inputs are used as the velocity command source, the servo motor may rotate at a low speed even if the analog velocity command is 0V. This is due to a minor drift in the velocity command received by the drive through the analog input channel. This minor velocity command drift is called “zero drift”.

This drift can be eliminated by the analog input zero drift compensation function.

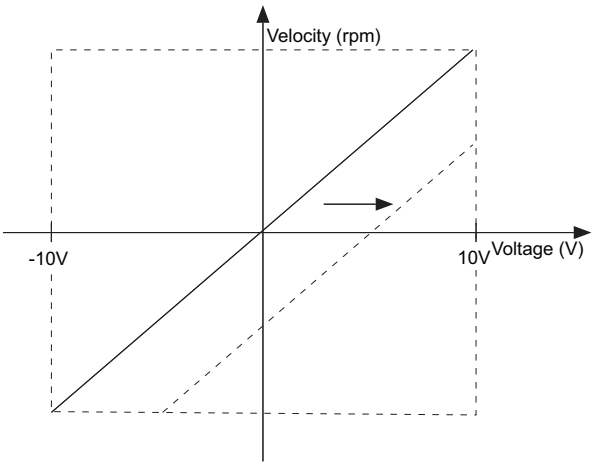

There are two ways to compensate for analog input zero drift: manual compensation and automatic compensation:

- Manually compensate for analog input zero drift
  1. Ensure that the analog voltage command from the host controller output is 0V.
  2. You can read the actual analog input voltage command received at the servo drive side through the monitoring function of the analog input voltage in the parameter set MON of the servo drive, or through the monitoring function of the SoMove commissioning software of the host controller.
  3. Enter the opposite voltage value in the zero-drift offset inhibition parameter (P3-34/P3-41)of the corresponding analog input channel.
- Automatically compensate for analog input zero drift
  1. The servo drive should be in Servo-off state.
  2. Ensure that the analog voltage command from the host controller output is 0V.
  3. Activate automatic zero-drift compensation via the servo drive panel parameter set [OP] - [Tun-] - [AICMP].

Compensation for the analog input zero drift is achieved by modifying the values of the following parameters.

P3-34	**Analog input 1: Input offset value**	**Minimum value**	**-5000**	**Unit**	**Related control mode**		
		Factory setting	**0**	**1 mV**	**–**	**V / Vz**	**T / Tz**
		Maximum value	**5000**		**–**	**–**	**–**
Parameter function:			**MODBUS address: 2326**				
Input offset value of analog input 1 Actual value of analog input 1 = Input voltage of analog input 1 - input offset value of analog input 1. **Modified settings become active immediately.**							

P3-41	Analog input 2: Input offset value	Minimum value	-5000	Unit	Related control mode		
		Factory setting	0	1 mV	–	V / Vz	T / Tz
		Maximum value	5000		–	–	–

Parameter function: **MODBUS address: 2328**

Input offset value of analog input 2

Actual value of analog input 2 = Input voltage of analog input 2 - input offset value of analog input 2.

Modified settings become active immediately.

Setting the Analog Input Deadband

When analog inputs are used as the velocity command source, you can set a threshold for the deadband window of the input voltage. The servo drive will treat the analog input voltage within the threshold of this window as 0V.

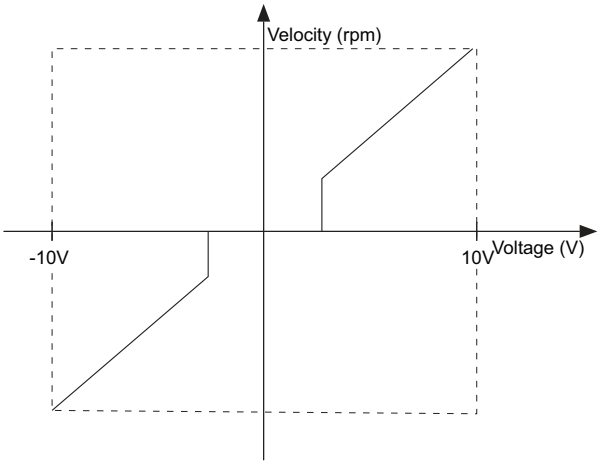

P3-37	Analog input 1: Zero voltage deadband window	Minimum value	0	Unit	Related control mode		
		Factory setting	0	1 mV	–	V / Vz	T / Tz
		Maximum value	1000		–	–	–

Parameter function: **MODBUS address: 2322**

Zero voltage dead zone window of analog input 1

The servo drive will treat the analog input voltage within the threshold of this window as 0V.

Modified settings become active immediately.

P3-44	Analog input 2: Zero voltage deadband window	Minimum value	0	Unit	Related control mode		
		Factory setting	0	1 mV	–	V / Vz	T / Tz
		Maximum value	1000		–	–	–

Parameter function: **MODBUS address: 2324**

Zero voltage dead zone window of analog input 2

The servo drive will treat the analog input voltage within the threshold of this window as 0V.

Modified settings become active immediately.

Forced Analog Input

Instead of a given external voltage input, an analog voltage input value can be forced directly by parameter. Both the analog voltage zero-drift bias and the deadband settings work for the forced analog inputs.

The user can switch between the use of an external analog voltage input value or the use of a forced analog input value via a parameter.

P3-35	Analog input 1: Use forced analog voltage input value	Minimum value	0	Unit	Related control mode		
		Factory setting	0	–	–	V / Vz	T / Tz
		Maximum value	1		–	–	–

Parameter function: **MODBUS address: 2310**

0: No forced value used.

1: Forced value used;

Modified settings become active immediately.

P3-36	Analog input 1: Forced analog voltage input value	Minimum value	-10000	Unit	Related control mode		
		Factory setting	0	1 mV	–	V / Vz	T / Tz
		Maximum value	10000		–	–	–

Parameter function: **MODBUS address: 2312**

Forced analog voltage values are active when P3-35 is 1.

Modified settings become active immediately.

P3-42	Analog input 2: Use forced analog voltage input value	Minimum value	0	Unit	Related control mode		
		Factory setting	0	–	–	V / Vz	T / Tz
		Maximum value	1		–	–	–

Parameter function: **MODBUS address: 2318**

0: No forced value used.

1: Forced value used;

Modified settings become active immediately.

P3-43	Analog input 2: Forced analog voltage input value	Minimum value	-10000	Unit	Related control mode		
		Factory setting	0	1 mV	–	V / Vz	T / Tz
		Maximum value	10000		–	–	–

Parameter function: **MODBUS address: 2320**

Forced analog voltage values are active when P3-42 is 1.

Modified settings become active immediately.

Analog Input Voltage Value Inversion

The analog input voltage value inversion function allows you to inverse the actual value of the analog input voltage. The actual analog voltage value is the actual input voltage after the correction of the analog input offset value and analog input deadband.

P3-33	Analog input 1: Voltage value is inversed	Minimum value	0	Unit	Related control mode		
		Factory setting	0	–	–	V / Vz	T / Tz
		Maximum value	1		–	–	–

Parameter function:

MODBUS address: 2362

0 / Inversion Off: Voltage value is not inversed.

1 / Inversion On: Voltage value is inversed.

Modified settings become active immediately.

P3-40	Analog input 2: Voltage value is inversed	Minimum value	0	Unit	Related control mode		
		Factory setting	0	–	–	V / Vz	T / Tz
		Maximum value	1		–	–	–

Parameter function:

MODBUS address: 2364

0 / Inversion Off: Voltage value is not inversed.

1 / Inversion On: Voltage value is inversed.

Modified settings become active immediately.

Analog Input Functions

The user can select analog input functions by parameter.

Selecting Analog Input Functions

In profile torque, the function selection of analog inputs allows the input value of analog voltage to be assigned as target torque or velocity limitation.

P3-31	Analog input 1: Input function	Minimum value	0	Unit	Related control mode		
		Factory setting	(Related to mode)	–	–	V / Vz	T / Tz
		Maximum value	4		–	–	–

Parameter function: **MODBUS address: 2332**

0 / No function: No function.

1 / Target Velocity: Target velocity in profile velocity.

2 / Target Torque: Target torque in profile torque.

3 / Velocity Limitation: Velocity limitation in profile velocity or profile torque.

4 / Torque Limitation: Torque limitation in profile velocity or profile torque.

Setting can only be modified if power stage is disabled.

Modified settings become active immediately.

P3-38	Analog input 2: Input function	Minimum value	0	Unit	Related control mode		
		Factory setting	(Mode dependent)	–	–	V / Vz	T / Tz
		Maximum value	4		–	–	–

Parameter function: **MODBUS address: 2342**

0 / No function: No function.

1 / Target Velocity: Target velocity in profile velocity.

2 / Target Torque: Target torque in profile torque.

3 / Velocity Limitation: Velocity limitation in profile velocity or profile torque.

4 / Torque Limitation: Torque limitation in profile velocity or profile torque.

Setting can only be modified if power stage is disabled.

Modified settings become active immediately.

In profile torque, the default function of the analog input channel 1 is “1/target torque”, and the default function of the analog input channel 2 is “0/no function”.

The two sets of analog channels cannot be assigned with the same functions.

Setting Analog Input Gains

When the analog input voltage is used as a torque command, the relationship between the analog voltage command and the torque command is related by the analog input gain parameter.

This parameter describes the torque command represented by the 10V analog input voltage in profile velocity, from which the torque commands represented by other analog input voltages can be linearly derived.

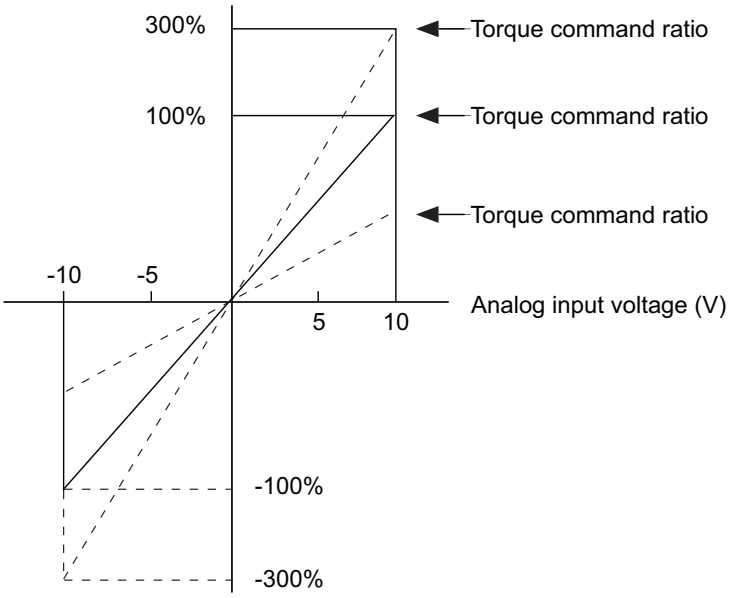

The proportional relation of the torque command to the analog is set by the parameter of torque command ratio

P4-24	Analog input 1: Torque command represented by the 10V analog input in Profile Torque	Minimum value	-30000	Unit	Related control mode		
		Factory setting	1000	0.1%	–	–	T / Tz
		Maximum value	30000		–	–	–
Parameter function:			**MODBUS address: 2340**				

Torque command represented by the 10 V analog input in Profile Torque, which is linearly distributed.

In increments of 0.1%.

Modified settings become active the next time the motor moves.

P4-25	Analog input 2: Torque command represented by the 10V analog input in Profile Torque	Minimum value	-30000	Unit	Related control mode		
		Factory setting	1000	0.1%	–	–	T / Tz
		Maximum value	30000		–	–	–
Parameter function:			**MODBUS address: 2350**				

Torque command represented by the 10 V analog input in Profile Torque, which is linearly distributed.

In increments of 0.1%.

Modified settings become active the next time the motor moves.

Smoothing function

Torque Profile Limitation

In profile torque, the user can limit the acceleration and decelaration slopes of the torque profile by parameter.

P4-22	Slope setting of the motion profile for torque.	Minimum value	0	Unit	Related control mode		
		Factory setting	100000	0.1% / s	–	–	T / Tz
		Maximum value	30000000		–	–	–

Parameter function: **MODBUS address: 1620**

In any internal profile torque of the drive, the slope set via this parameter will be used.

If the acceleration and deceleration slope of the torque command is greater than the value set via this parameter when the analog input voltage is used as the torque command, the acceleration and deceleration slope of the actual motion will be automatically limited to the slope set via this parameter.

Modified settings become active immediately.

P4-23	Activation of the motion profile for torque.	Minimum value	0	Unit	Related control mode		
		Factory setting	1	–	–	–	T / Tz
		Maximum value	1		–	–	–

Parameter function: **MODBUS address: 1624**

Activation of the motion profile for torque.

0 / Profile Off: Profile Off

1 / Profile On: Profile On

Setting can only be modified if power stage is disabled.

Modified settings become active immediately.

Current Loop Command Low-pass Filters

You can use the current loop command low-pass filter to attenuate high-frequency noise on the current loop command, thereby reducing torque fluctuations, and at the same time providing a smoothing effect on the current loop command.

The use of a current loop command low-pass filter reduces the responsive bandwidth of the current loop.

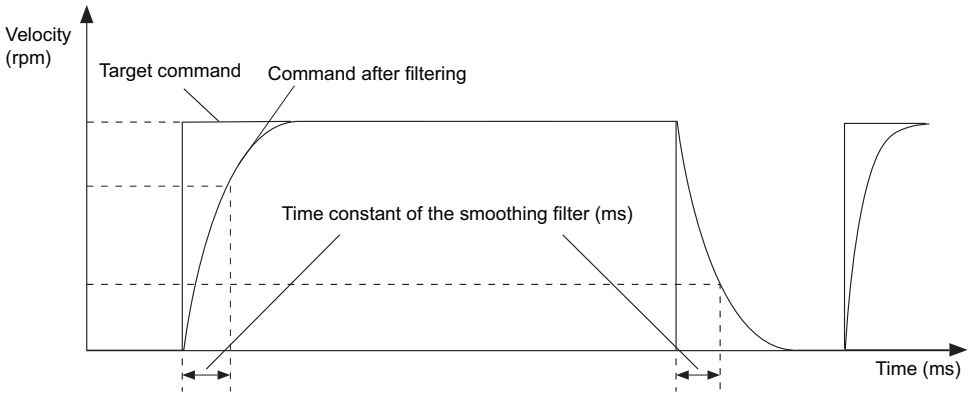

P1-05	Control parameter set 1: Filter time constant of the reference current value filter.	Minimum value	0	Unit	Related control mode		
		Factory setting	10	0.01 ms	P	V / Vz	T / Tz
		Maximum value	400		MS	S	–

Parameter function: **MODBUS address: 4618**

Control parameter set 1 Filter time constant of the reference current value filter.

In increments of 0.01 ms.

Modified settings become active immediately.

P1-12	Control parameter set 2: Filter time constant of the reference current value filter.	Minimum value	0	Unit	Related control mode		
		Factory setting	10	0.01 ms	P	V / Vz	T / Tz
		Maximum value	400		MS	S	–

Parameter function: **MODBUS address: 4874**

Control parameter set 2 Filter time constant of the reference current value filter.

In increments of 0.01 ms.

Modified settings become active immediately.

Special Functions

Velocity Limitation Function

When torque control is performed, the motor is controlled in the form of controlling torque output, but not the motor velocity. If the torque command of the motor is higher than the load-side torque now, the motor continues to accelerate. In this case, the motor velocity must be limited by the velocity limitation function to avoid damage to the motor or the load.

The motor velocity is limited by the following methods:

- Maximum velocity of the motor (read only)

Velocity limitation through the maximum velocity (P4-18)

- Velocity limitation through analog inputs

- Velocity limitation through the internal velocity command table

- Velocity limitation through the drive's input point functions

The actual motor velocity limit is the minimum of the above velocity limitations.

Velocity limitation through the maximum velocity

P4-18	Velocity limitation	Minimum value	1	Unit	Related control mode		
		Factory setting	13200	usr_v	P	V / Vz	T / Tz
		Maximum value	2147483647		MS	S	–
Parameter function:			**MODBUS address: 4384**				

Velocity limitation

During operation, the velocity limit is one of the following values (whichever is lowest):

- Value set via this parameter

- Maximum velocity of motor

– The velocity threshold defined in parameter P3-60 when the velocity limitation is activated via input

Modified settings become active immediately.

Velocity limitation through analog inputs:

By setting the function of the analog input to “3/velocity limitation”, the relationship between the analog voltage command and the velocity limitation is associated via the analog input velocity limitation parameter.

This parameter describes the velocity limitation represented by the 10V analog input voltage in profile velocity, from which the velocity limitations represented by other analog input voltages can be linearly derived.

P3-31	Analog input 1: Input function	Minimum value	0	Unit	Related control mode		
		Factory setting	(Related to mode)	–	–	V / Vz	T / Tz
		Maximum value	4		–	–	–

Parameter function: **MODBUS address: 2332**

0 / No function: No function.

1 / Target Velocity: Target velocity in profile velocity.

2 / Target Torque: Target torque in profile torque.

3 / Velocity Limitation: Velocity limitation in profile velocity or profile torque.

4 / Torque Limitation: Torque limitation in profile velocity or profile torque.

Setting can only be modified if power stage is disabled.

Modified settings become active immediately.

P3-38	Analog input 2: Input function	Minimum value	0	Unit	Related control mode		
		Factory setting	(Mode dependent)	–	–	V / Vz	T / Tz
		Maximum value	4		–	–	–

Parameter function: **MODBUS address: 2342**

0 / No function: No function.

1 / Target Velocity: Target velocity in profile velocity.

2 / Target Torque: Target torque in profile torque.

3 / Velocity Limitation: Velocity limitation in profile velocity or profile torque.

4 / Torque Limitation: Torque limitation in profile velocity or profile torque.

Setting can only be modified if power stage is disabled.

Modified settings become active immediately.

P4-16	Analog input 1: Velocity limitation represented by the 10V analog input	Minimum value	1	Unit	Related control mode		
		Factory setting	3000	usr_v	–	V / Vz	T / Tz
		Maximum value	2147483647		–	–	–

Parameter function: **MODBUS address: 2336**

Velocity limitation represented by 10 V analog input

Please refer to Setting Analog Input Gains, page 216for detailed parameter description.

Setting can only be modified if power stage is disabled.

Modified settings become active immediately.

P4-17	Analog input 2: Velocity limitation represented by the 10V analog input	Minimum value	1	Unit	Related control mode		
		Factory setting	3000	usr_v	–	V / Vz	T / Tz
		Maximum value	2147483647		–	–	–
Parameter function:			MODBUS address: 2346				

Velocity limitation represented by 10 V analog input

Please refer to Setting Analog Input Gains, page 216for detailed parameter description.

Setting can only be modified if power stage is disabled.

Modified settings become active immediately.

Velocity limitation through the internal velocity command table:

In torque control mode, an internal velocity command can be selected as velocity limitation through the input point function INTVCM0/ INTVCM1/ INTVCM2.

P4-09 ~ P4-15	Internal velocity command n / internal velocity limitation n	Minimum value	-2147483648	Unit	Related control mode		
		Factory setting	0	usr_v	–	V / Vz	T / Tz
		Maximum value	2147483647		–	–	–
Parameter function:			MODBUS address: –				

Internal velocity command n / internal velocity limitation n

Modified settings become active immediately.

Velocity limitation through the drive's input point functions:

The user can limit the motor velocity to a preset value through the input point function "8. Velocity Limitation".

P3-60	Velocity limitation via input	Minimum value	0	Unit	Related control mode		
		Factory setting	10	usr_v	P	V / Vz	T / Tz
		Maximum value	2147483647		MS	S	–
Parameter function:			MODBUS address: 1596				

Velocity limitation via input

The input point function limits the velocity below the value set via this parameter.

Modified settings become active immediately.

Monitoring Functions

Target Rorque Monitoring

When internal parameters are used as torque commands, the user can monitor whether the motor reaches the target torque.

The motor torque is considered to have reached the target torque when it enters the monitoring window range of the target torque and stabilizes for a period of time.

The drive can output the monitoring status through an output terminal.

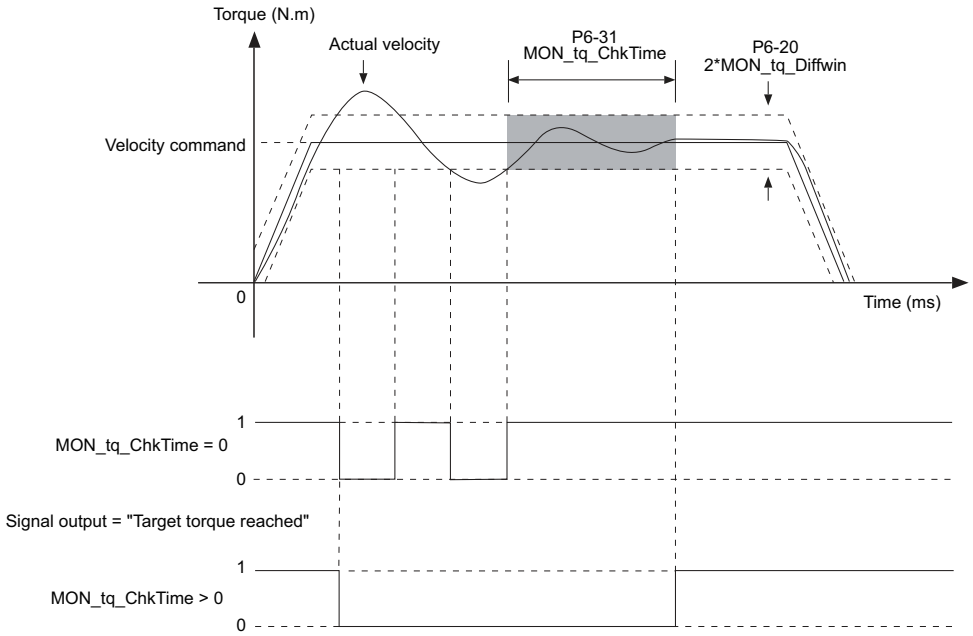

P6-20	Torque window, permissible deviation	Minimum value	0	Unit	Related control mode		
		Factory setting	30	0.1%	–	–	T / Tz
		Maximum value	30000		–	–	–

Parameter function: **MODBUS address: 1626**

Torque window, permissible deviation

The control deviation for the standstill window time must be within this range for a standstill of the drive to be detected. Processing of the standstill window must be activated via P6-21.

Modified settings become active immediately.

P6-21	Torque window, time.	Minimum value	0	Unit	Related control mode		
		Factory setting	0	1 ms	–	–	T / Tz
		Maximum value	16383		–	–	–

Parameter function: **MODBUS address: 1628**

Torque window, time.

Value 0: Torque window monitoring deactivated.

Value > 0: Time in ms during which the control deviation must be in the standstill window.

Modified settings become active immediately.

Torque Threshold Monitoring

The user can set a torque monitoring threshold and monitor whether the motor exceeds or falls below this torque threshold.

When the motor exceeds or falls below the torque threshold and remains for a certain period of time, the motor is considered to be exceeding or falling below this threshold.

The drive can output the monitoring status through an output terminal.

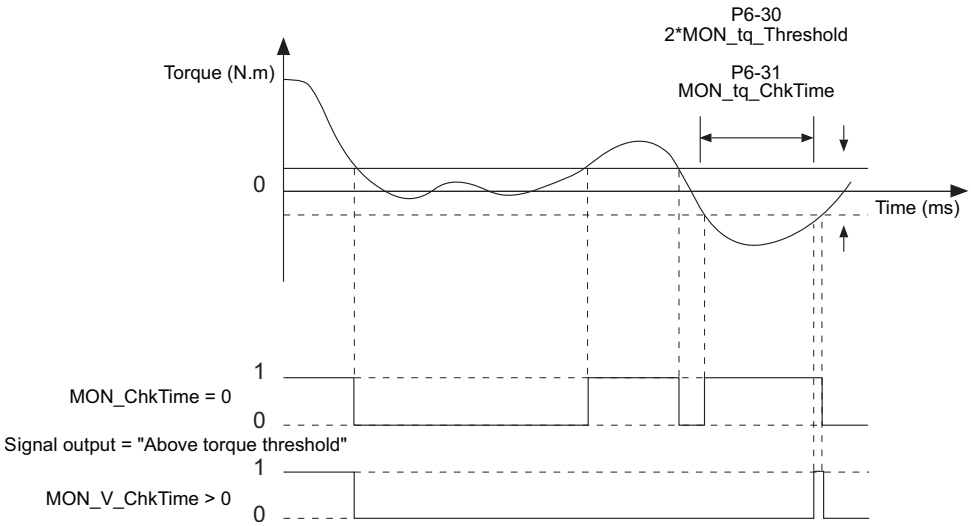

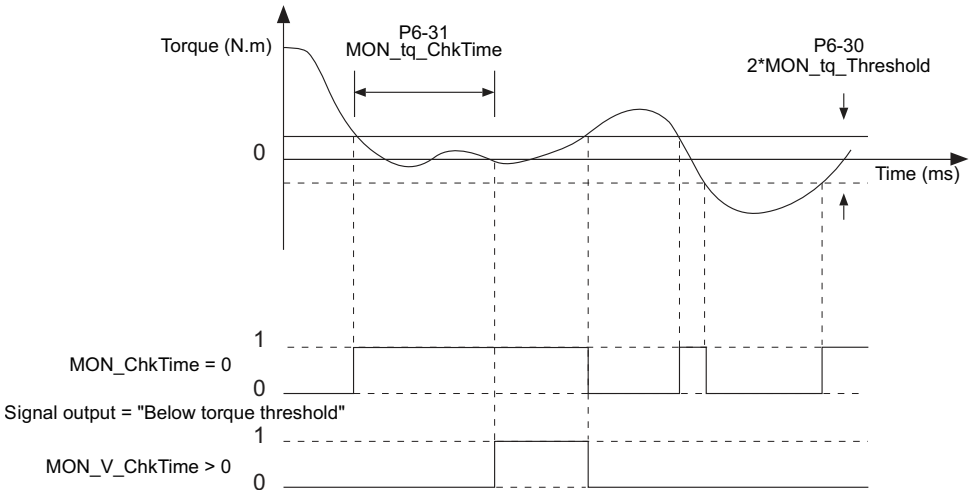

P6-30	Torque monitoring: Torque monitoring threshold	Minimum value	0	Unit	Related control mode		
		Factory setting	600	0.1%	–	V / Vz	–
		Maximum value	30000		–	–	–
Parameter function:			**MODBUS address: 1592**				

Monitoring of current threshold.

The system monitors whether the drive is below the defined value during the period set with P6-31.

In increments of 0.1%.

Modified settings become active immediately.

P6-31	Torque monitoring: Monitoring window time	Minimum value	0	Unit	Related control mode		
		Factory setting	0	1 ms	–	V / Vz	–
		Maximum value	9999		–	–	–

Parameter function:	MODBUS address: 1710

Monitoring of time window.

Adjustment of a time for monitoring of current threshold. If the monitored value is in the permissible range during the adjusted time, the monitoring function delivers a positive result.

Modified settings become active immediately.

Modulo Function

Setting a Modulo Range

Description

The modulo range supports applications with repeating arrangements of target positions (such as rotary indexing tables). The target positions are mapped to a parameterizable movement range.

Availability

The modulo function is available in the following operating modes:

- Cyclic Synchronous Position
- Profile Position
- Profile Velocity
- Profile Torque
- Homing

Direction of Movement

The direction of movement for absolute target positions can be adjusted to meet the requirements of the application.

- Shortest distance
- Positive direction of movement only
- Negative direction of movement only

Multiple Modulo Range

In addition, it is possible to set a multiple modulo range for absolute target positions. A movement with an absolute target position beyond the modulo range is performed in a way as if several modulo ranges had been arranged one after the other.

Example:

- Modulo range
  - Minimum position: 0 usr_p
  - Maximum position: 3600 usr_p
- Actual position: 700 usr_p
- Target positions absolute: 5000 usr_p
- Left: Without multiple modulo range

  Right: With multiple modulo range

Multiple modulo range

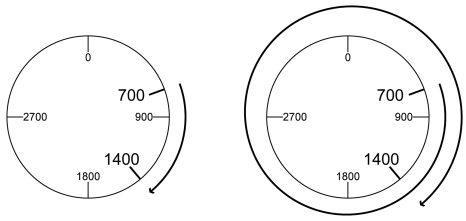

Parameterization

Overview

Overview of parameters

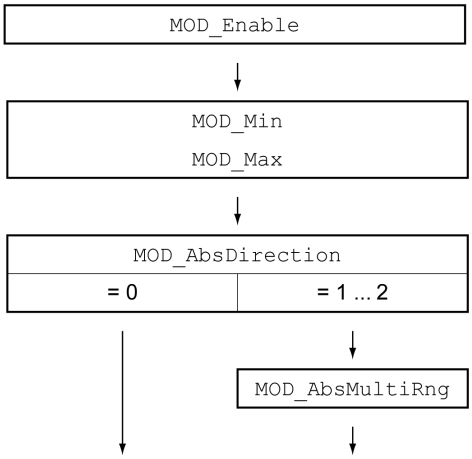

Scaling

Using a modulo range requires the scaling to be adapted. The scaling of the motor must be adapted to the requirements of the application.

Activation

The modulo range is activated with the parameter *MOD_Enable*.

P5-32	MOD_Enable	Minimum value	0	Unit	Related control mode		
		Factory setting	0	–	–	–	–
		Maximum value	1		MS	–	–

Parameter function:	MODBUS address: 1648
Activation of Modulo function **0 / Modulo Off**: Modulo is off **1 / Modulo On**: Modulo is on **Setting can only be modified if power stage is disabled.** **Modified settings become active immediately.**	

Modulo Range

The parameters *MOD_Min* and *MOD_Max* can be used to set the modulo range.

P5-33	MOD_Min	Minimum value	-2147483648	Unit	Related control mode		
		Factory setting	0	usr_p	–	–	–
		Maximum value	2147483647		MS	–	–

Parameter function: **MODBUS address: 1650**

Minimum position of modulo range

The minimum position value of the modulo range must be less than the maximum position value of the modulo range.

Setting can only be modified if power stage is disabled.

Modified settings become active immediately.

P5-34	MOD_Max	Minimum value	-2147483648	Unit	Related control mode		
		Factory setting	3600	usr_p	–	–	–
		Maximum value	2147483647		MS	–	–

Parameter function: **MODBUS address: 1652**

Maximum position of modulo range

The maximum position value of the modulo range must be greater than the minimum position value of the modulo range.

Setting can only be modified if power stage is disabled.

Modified settings become active immediately.

Direction for Absolute Movements

The parameter *MOD_AbsDirection* lets you set the direction of movement for absolute movements.

P5-35	MOD_AbsDirection	Minimum value	0	Unit	Related control mode		
		Factory setting	0	usr_p	–	–	–
		Maximum value	2		MS	–	–

Parameter function: **MODBUS address: 1654**

Direction of absolute movement with modulo

0 / Shortest Distance: Movement with shortest distance

1 / Positive Direction: Movement only in positive direction

2 / Negative Direction: Movement only in negative direction

If the parameter is set to 0, the drive calculates the shortest way to the new target position and starts the movement in the corresponding direction. If the distance to the target position is identical in positive and negative directions, the movement takes place in positive direction.

Modified settings become active immediately.

Multiple Modulo Range for Absolute Movements

The parameter *MOD_AbsMultiRng* lets you set a multiple modulo range for absolute movements.

P5-36	MOD_ABSMultiRng	Minimum value	0	Unit	Related control mode		
		Factory setting	0	usr_p	–	–	–
		Maximum value	1		MS	–	–

Parameter function:	MODBUS address: 1656
Multiple ranges for absolute movement with modulo **0 / Multiple Ranges Off**: Absolute movement in one modulo range **1 / Multiple Ranges On**: Absolute movement in multiple modulo ranges **Modified settings become active immediately.**	

Examples with Relative Movements

Assumptions

The settings below are assumed for the examples.

- Rotary motor
- Position scaling
  - 0x6091:01 = 131072
  - 0x6091:02 = 3600
- Modulo range
  - *MOD_Min* (P5-33, 3006:39_h) = 0 usr_p
  - *MOD_Max* (P5-34, 3006:$3A_h$) =3600 usr_p
- Actual position: 700 usr_p

Example 1

Target positions relative: 500 usr_p and 3300 usr_p

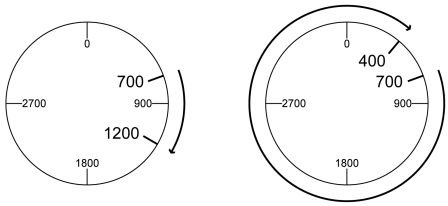

Example 2

Target positions relative: -500 usr_p and -3300 usr_p

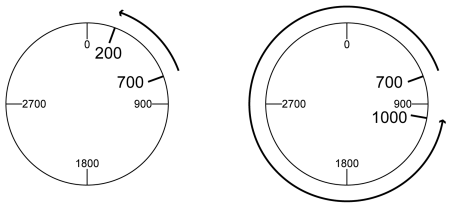

Examples with Absolute Movements and "Shortest Distance"

Assumptions

The settings below are assumed for the examples.

- Rotary motor
- Position scaling
  - 0x6091:01 = 131072
  - 0x6091:02 = 3600
- Modulo range
  - *MOD_Min* (P5-33, 3006:39$_h$) = 0 usr_p
  - *MOD_Max* (P5-34, 3006:3A$_h$) =3600 usr_p
- Actual position: 700 usr_p

Example 1

Target positions absolute: 1500 usr_p and 5000 usr_p

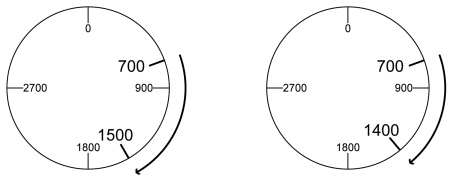

Example 2

Target positions absolute: 2500 usr_p and 2900 usr_p

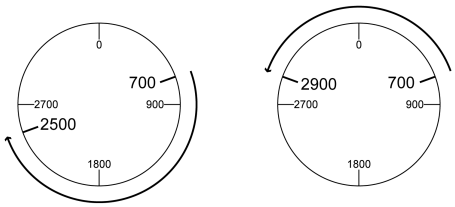

Examples with Absolute Movements and "Positive Direction"

Assumptions

The settings below are assumed for the examples.

- Rotary motor
- Position scaling
  - 0x6091:01 = 131072
  - 0x6091:02 = 3600
- Modulo range
  - *MOD_Min* (P5-33, 3006:39_h) = 0 usr_p
  - *MOD_Max* (P5-34, 3006:$3A_h$) =3600 usr_p
- Actual position: 700 usr_p

Parameter *MOD_AbsDirection* (P5-35, 3006:$3B_h$) = 1/Positive Direction

Example 1

Parameter *MOD_AbsMultiRng* (P5-36, 3006:$3C_h$) = 0/Multiple Ranges Off

Target positions absolute: 1500 usr_p and 5000 usr_p

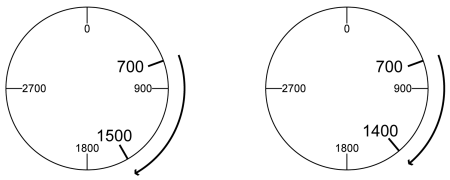

Example 2

Parameter *MOD_AbsMultiRng* (P5-36, 3006:$3C_h$) = 1/Multiple Ranges On

Target positions absolute: 1500 usr_p and 5000 usr_p

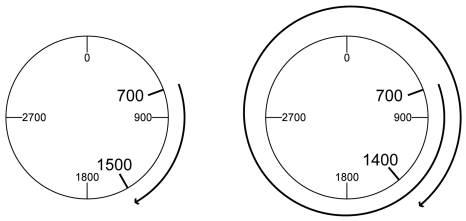

Examples with Absolute Movements and "Negative Direction"

Assumptions

The settings below are assumed for the examples.

- Rotary motor
- Position scaling
  - 0x6091:01 = 131072
  - 0x6091:02 = 3600
- Modulo range
  - *MOD_Min* (P5-33, 3006:39_h) = 0 usr_p
  - *MOD_Max* (P5-34, 3006:$3A_h$) =3600 usr_p
- Actual position: 700 usr_p

Parameter *MOD_AbsDirection* (P5-35, 3006:$3B_h$) = 2/Negative Direction

Example 1

Parameter *MOD_AbsMultiRng* (P5-36, 3006:$3C_h$) = 0/Multiple Ranges Off

Target positions absolute: 1500 usr_p and -5000 usr_p

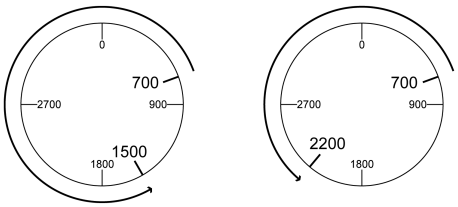

Example 2

Parameter *MOD_AbsMultiRng* (P5-36, 3006:$3C_h$) = 1/Multiple Ranges On

Target positions absolute: 1500 usr_p and -5000 usr_p

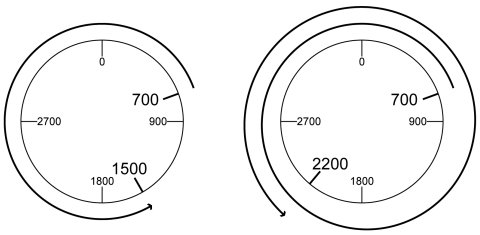

Motion Sequence (MS) Function

Brief Description of MS Function

In Motion Sequence mode, the motion sequence is executed in the Data Set.

In the Data Set, the type of motion, target values (velocity, position, acceleration / deceleration, etc.) are stored. The user can also specify the number of the data set next to the current data set and the start conditions. In Continuous mode, the subsequent data set is started according to the conditions after the current data set is executed.

There are 2 types of data set starting:

- Starting the Data Set in Continuous Mode
  1. Select data set by the binary code of input point signals
  2. Verify and start the selected data set by input point signals
  3. If the subsequent data set is defined in the current data set, it will be started automatically and continuously after the current data set is executed.
  4. Also, the user can specify the method and conditions for starting the subsequent data set consecutively, and the subsequent data set will be started consecutively with reference to these methods and conditions
- Start single data set
  1. Select data set by the binary code of input point signals
  2. Start the selected data set by input point signals
  3. While the current data set is executing, the user can select and start a new data set through the same operation
  4. The new data set will be started with reference to the transition type

NOTE: The Motion Sequence function must be enabled before triggering the motion. If a single data set and continuous mode are started at the same time, the single data set takes precedence.

Data Set Composition

A total of 32 data sets are supported within the drive.

Each data group consists of 12 areas:

No.	Designation	Description
1	Data set type Data set Type	Select of data set type. Select of data set type.
2	Setting A Setting A	Target values for data set operation. Target values for data set operation.
3	Setting B Setting B	
4	Setting C Setting C	
5	Setting D Setting D	
6	Transition type Transition type	Set the type of transition to the subsequent data set. Set the type of transition to the subsequent data set.
7	Subsequent Data set Subsequent Data set	Target subsequent data set to be started. Target subsequent data set to be started.
8	Transition Condition 1 Switching condition1	1st switching condition Switching condition1
9	Transition Value 1 Judgment value of condition 1	1st switching condition value Judgment value of switching condition 1
10	Logical operator Logical operator	Logically link switching condition 1 and switching condition 2 Logical operators of switching conditions 1 and 2
11	Transition Condition 2 Switching condition2	2nd switching condition Switching condition2
12	Transition Value 2 Judgment value of switching condition 2	2nd switching condition value Judgment value of switching condition 2

Data Group Type, Configuration and Mode of Transition

Data set type	Setting A	Setting B	Setting C	Setting D	Transition type
Data set Type	**Setting A**	**Setting B**	**Setting C**	**Setting D**	**Transition type**

Data set Type	Setting A	Setting B	Setting C	Setting D	Transition type
Move Absolute: Absolute positioning movement.	Acceleration Unit: usr_a	Velocity Unit: usr_v	Absolute Target Position Unit: usr_p	Deceleration Unit: usr_a	• No Transition • Abort And Go Next • Buffer And Start Next • Blending Previous • Blending Next
Move Additive Superimposed movement	Acceleration Unit: usr_a	Velocity Unit: usr_v	Relative target position Unit: usr_p	Deceleration Unit: usr_a	• No Transition • Abort And Go Next • Buffer And Start Next
Reference Movement Reference movement	Homing mode	Setting value at reference point Unit: usr_p	–	–	• No Transition • Buffer And Start Next
Position Setting	Setting Unit: usr_p	–	–	–	• No Transition • Buffer And Start Next
Repeat Repeat	Number of repetitions **(1...65535)**	The number of the data set that should be started when repeating	–	–	• No Transition • Buffer And Start Next
Move Relative Relative positioning movement.	Acceleration Unit: usr_a	Velocity Unit: usr_v	Relative Target Position Unit: usr_p	Deceleration Unit: usr_a	• No Transition • Abort And Go Next • Buffer And Start Next
Move Velocity Acceleration Movement	Acceleration Unit: usr_a	Velocity Unit: usr_v	Motion Direction Value 0: positive Value 1: negative Value 2: from previous data set	Deceleration(1) Unit: usr_a	• Abort And Go Next
Electronic Gear Electronic gear mode.(2)	Method Value 0: None Value 1: Position synchronization without compensation movement Value 2: Position synchronization with compensation movement Value 3: Velocity synchronization:	Numerator of the Gear Ratio Like parameters GEARnum	Denominator of the Gear Ratio Like parameters GEARdenom	Acceleration and Deceleration for Speed Synchronization (1) (3) (4) Unit: usr_a	• Abort And Go Next
Write Parameter Direct Parameter Writing	Modbus address	Parameter value (Negative Value Input required for values greater than 2147483647.)			• No Transition • Buffer And Start Next

Data set Type	Setting A	Setting B	Setting C	Setting D	Transition type
(1) The motion characteristic profile for velocity must be activated. Refer to the description of parameter P4–00for more details. (2) The operating principle is similar to an electronic gear mode. (3) Value 0 indicates that the acceleration and deceleration values are obtained from the previous data set.					

Transition type

Set the type of transition to the subsequent data set. Mode of transition：

- No Transition

  Once the motion is successfully executed, no other data sets will be activated (sequence ends).
- Abort And Go Next

  If the switching condition is satisfied, the motion will be interrupted and the subsequent data set will be activated.

  The transition will be completed with considering the switching condition.
- Buffer And Start Next

  When the motion is successfully executed and the switching condition is satisfied, the subsequent data set will be started.

  The transition will be completed with considering the switching condition.
- Blending Previous / Blending Next (Only applicable when the data set type is Move Absolute).

  Adjust the velocity according to the velocity of the next data set when the target position has been reached or is about to be reached.

  The transition will be completed without considering the switching condition.

Mode of transition

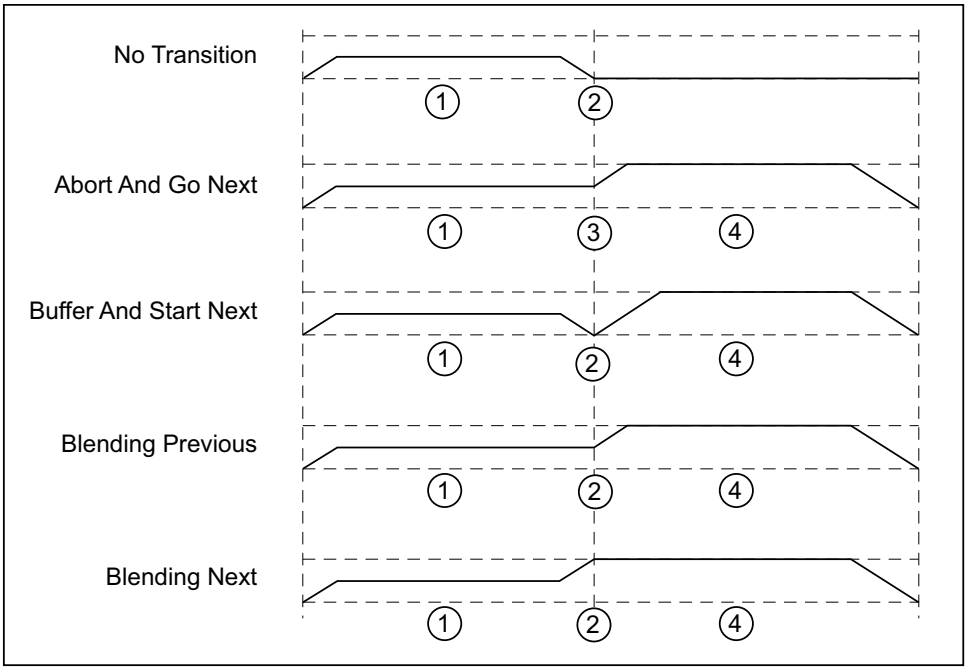

1. The first data set.
2. The target location of the first data set is reached.
3. When the switching condition is met, the first data set is terminated and the next data set is started.
4. The next data set.

Subsequent data set and switching conditions

Subsequent Data Set	Switching Condition 1	Transition Value 1	Logical Operator	Switching Condition 2	Transition Value 2
Subsequent Data set	Switching condition 1	Judgment value of condition 1	Logical operator	Switching condition 2	Judgment value of condition 2

Subsequent Data set

By specifying the next data set number, you can define the data set that will be activated as the subsequent data set.

Switching condition 1

By switching condition 1, you can set the first switching condition. The following switching conditions are available:

- Continue Without Condition:

  No condition. Start subsequent data set directly. The switching condition 2 is invalid
- Wait Time:

  The switching condition is the wait time.
- Start Request Edge

  The switching condition is to trigger the pulse edge of the signal input.
- Start Request Level

  The switching condition is to trigger the level of the signal input.

Judgment value of condition 1

Based on the judgment value of condition 1, you can set the numerical value of the first switching condition. The significance depends on the set switching condition.

- Continue Without Condition:

  Not applicable
- When the switching condition is "Waiting Time":

  Values 0...30000: Waiting time 0…30000 s.
- When the switching condition is "Start Request Edge":
  - Value 0: Triggered by a rising edge
  - Value 1: Falling edge
  - Value 4: Rising or falling edge
- When the switching condition is "Start Request Level":
  - Value 2: 1 level
  - Value 3: 0 level

Logical operator

Logical operators are used to logically connect switching condition 1 and switching condition 2. The following logical operators are provided:

- None

  No connections (switching condition 2 is invalid)
- AND

  Logic "AND" connection
- OR

  Connection

Switching condition 2

Based on switching condition 2, you can set the second switching condition. The following switching conditions are available:

- Continue Without Condition:

  No condition. Start subsequent data set directly.
- Start Request Edge

  The switching condition is to trigger the pulse edge of the signal input.

  If pulse edges and waiting time are connected with "AND", the evaluation of pulse edges will be performed after the waiting time has elapsed.
- Start Request Level

  The switching condition is to trigger the level of the signal input.

Judgment value of condition 2

Based on the judgment value of condition 2, you can set the numerical value of the second switching condition. The significance depends on the set switching condition.

- Continue Without Condition:

  Not applicable
- When the switching condition is "Start Request Edge":
  - Value 0: CCLR is triggered by a rising edge
  - Value 1: Falling edge
  - Value 4: Rising or falling edge
- When the switching condition is "Start Request Level":
  - Value 2: 1 level
  - Value 3: 0 level

How to Edit Data Sets via HMI

Data set content editing process:

- Go to the parameter P7–02
- Select the data set number by the 4th & 5th digit of the parameter
- Go to the data set
- Select the data area number by the 1st & 2nd digit of the parameter
- Go to data content
- Edit data content
- Return to the previous level
- Edit the 1st and 2nd digit of the parameter and select other data area numbers
- Go to another data content
- Edit data content

Example:

Edit the content of the parameter areas 0 and 1 in the parameter set 2.

Display	Operation
P7-02	**Select** P7–02 **in the CONF set.** Click the S key to enter.
00-	The last edited data set number is displayed. Use the Up or Down arrow to select 2.
02-	Click the S key to go to the data set 2 and select a parameter area number.
02-00	The last edited parameter area number for this data set is displayed. Use the Up or Down arrow to select 0. Click the S key to go to the parameter area 0 for the data set 2.
0	Click the S key to start editing the content. The last character where the cursor is in the display content starts flashing.
0	Use the Up or Down arrow to edit the content of the parameter bit with the cursor.
2	Press and hold the S key for more than 1.5 seconds to save the content. The display content flashes once and then stops.
2	Click the M key to exit editing the content of the parameter area.
02-00	The last edited parameter area number of this data set is displayed.
02-01	Use the Up or Down arrow to select 2. Click the S key to go to the parameter area 1 for the data set 2.
06000	Click the S key to start editing the content. The last character where the cursor is in the display content starts flashing.
06000	Use the Up or Down arrow to edit the content of the parameter bit with the cursor. Click the S key to move the cursor from right to left.
20000	Press and hold the S key for more than 1.5 seconds to save the content. The display content flashes once and then stops.
20000	Click the M key to exit editing the content of the parameter area.
02-01	Click the M key to exit selecting the number of the parameter area.
02-	Use the Up or Down arrow to select other parameter sets.
03-	–

Starting the Data Set in Continuous Mode

In Continuous mode, data sets will be started continuously as set:

- If subsequent data sets are set in the present data set, it will be switched to the subsequent data sets sequentially after the movement of the current data set is finished.
- If switching conditions are set in the present data set, the subsequent data set will be started when the switching conditions are satisfied.

Configuring Signal Input Functions

To start a data set in Continuous mode, the following signal input functions need to be configured first:

Signal input function	Description
29/ 129 - **Start a data set in Continuous mode**	Start a data set in Continuous mode. **Before starting a data set in Continuous mode, you need to select and verify the target data set first**: **Select the target data set by the binary number of the combination of "Data Set Select** Bit 0**" to "Data Set Select** Bit 4**" of the signal input function.** Verify the selected target data set with the signal input function "Target Data Set Select".
14/114 - Select the target data set	Verify the selected target data set in Continuous mode. **If the signal input function "Data Set Select Bitn" is not configured at any input point, the input signal function "Target Data Set Select" selects and verifies the data set 0.**
15/115 - **Data set selection** Bit 0	**Select the target data set by the binary number of the combination of "Data Set Select** Bit 0**" to "Data Set Select** Bit 4**" of the signal input**
16/116 - **Data set selection** Bit 1	
17/117 - **Data set selection** Bit 2	
18/118 - **Data set selection** Bit 3	
35/135 - **Data set selection** Bit 4	

The Type of Data Set Start Signal Inputs in Continuous Mode

You can set the type of data set start signal inputs in Continuous mode by the parameter P7-03.

P7-03	**Motion Sequence: Start condition for the start of a sequence via a signal input.**	**Minimum value**	**0**	**Unit**	**Related control mode**		
		Factory setting	**0**	**–**	**–**	**–**	**–**
		Maximum value	**3**		**MS**	**–**	**–**
Parameter function:			**MODBUS address: 11536**				

Start condition for the start of a sequence via a signal input.

0 / Rising Edge: Rising edge

1 / Falling Edge: Falling edge

2 / 1-level: 1 level

3 / 0-level: 0 level

Modified settings become active the next time the motor moves.

Setting the Type of Continuous Starting of Subsequent Data Sets in Continuous Mode

You can set the starting type of the subsequent data set in Continuous mode by the parameter P7-04:

P7-04	Motion Sequence: Selection of the data set number after the end of a sequence.	Minimum value	0	Unit	Related control mode		
		Factory setting	0	–	–	–	–
		Maximum value	1		MS	–	–
Parameter function:			MODBUS address: 11538				
0 / DataSetSelect:							
1 / Automatic: Data set is set automatically							
Setting can only be modified if power stage is disabled.							
Modified settings become active immediately.							

Start single data set

In Single mode, the selected data set will be started on an individual basis.

Only one data set will be run at a time in Single mode. Even if a subsequent data set is configured in the present data set, it will not be started after the current data set has finished running.

Configuring Signal Input Functions

To start a data set in Single mode, the following signal input functions need to be configured first:

Signal input function	Description
13/113 - **Start a single data set**	Start a single data set **Select the target data set by the binary number of the combination of "Data Set Select** Bit 0**" to "Data Set Select** Bit 4**" of the signal input**
15/115 - **Data set selection** Bit 0	**Select the target data set by the binary number of the combination of "Data Set Select** Bit 0**" to "Data Set Select** Bit 4**" of the signal input**
16/116 - **Data set selection** Bit 1	
17/117 - **Data set selection** Bit 2	
18/118 - **Data set selection** Bit 3	
35/135 - **Data set selection** Bit 4	

Setting the Functions of Falling Edge of Start Signals in Single Mode

You can use the parameter P7-05 to set whether the data set movement can be interrupted by the falling edge of start signals in Single mode.

P7-05	Motion Sequence: Response to falling edge at signal input for 'Start Signal Data Set'.	Minimum value	0	Unit	Related control mode		
		Factory setting	0	–	–	–	–
		Maximum value	1		MS	–	–
Parameter function:			**MODBUS address: 11544**				
0 / No Reaction: No response 1 / Cancel Movement: Cancel active movement **Setting can only be modified if power stage is disabled.** **Modified settings become active immediately.**							

Switching Operating Mode

The operating mode can be changed after the current operating mode is finished.

In addition, in some operating modes, it is also possible to change the operating mode during motion.

During motion, the following motion modes can be changed between:

- Profile Torque
- Profile velocity
- Electronic gear mode.
- Internal Profile Torque.
- Internal Profile Velocity

Depending on the operating mode to be changed, the motor will stop or not when the change is made.

Current mode \ Target mode	Electronic gear mode Gear	Velocity mode V	Internal velocity mode Vz	Torque mode T	Internal torque mode Tz
Electronic gear mode Gear		Motor does not stop	Motor does not stop	Motor does not stop	Motor does not stop
Velocity mode V	Motor does not stop		Motor does not stop	Motor does not stop	Motor does not stop
Internal velocity mode Vz	Motor does not stop	Motor does not stop		Motor does not stop	Motor does not stop
Torque mode T	Motor does not stop	Motor does not stop	Motor does not stop		Motor does not stop
Internal torque mode Tz	Motor does not stop	Motor does not stop	Motor does not stop	Motor does not stop	

To switch between the two operating modes, the user must set three parameters:

The function of the input DIx is defined as “Operating Mode Transition” 27 / 127.

The current operating mode is set via the parameter P0-00 “Control Mode”.

The target operating mode to be changed is set by the parameter P3-63 “Control Mode Transition Target”.

Auxiliary Functions during Operation

Setting of the Halt Function

The Halt function allows you to interrupt a motion that is being executed. The interrupted motion can be resumed and continue.

The Halt function is enabled via the drive input point, or the Halt command can be sent to the device via the commissioning software.

When a Halt is activated, the motor motion can be stopped through two ways, and the motor stop mode can be selected via the parameter P5-14:

- The motor stops according to the deceleration ramp, which is set via the parameter P4-03
- The motor stops according to the torque ramp, which is set via the parameter P5-15

P4-03	Deceleration of motion profile of the drive	Minimum value	1 or 120	Unit	Related control mode		
		Factory setting	6000	usr_a	–	V / Vz	–
		Maximum value	2147483647		MS	S	–

Parameter function: **MODBUS address: 1558**

Deceleration of motion profile of the drive

In any mode motion profile for velocity, the deceleration set in this parameter is used.

If the deceleration of the velocity command is greater than the value set in this parameter when the analog input voltage is used as a velocity command, the deceleration of the actual movements is automatically limited to the deceleration set in this parameter.

Operating mode with a minimum value of 1:

- Gear
- Profile Velocity
- MS (Move Velocity)

Operating mode with a minimum value of 120:

- Jog
- Profile Position
- Homing
- MS (Move absolute / Move additive / Move relative / Reference movement)

Modified settings become active the next time the motor moves.

P5-14	Stop mode of Halt	Minimum value	1	Unit	Related control mode		
		Factory setting	1	–	P	V / Vz	T / Tz
		Maximum value	3		MS	S	–

Parameter function: **MODBUS address: 1582**

Stop mode when Halt is activated

1 / Deceleration Ramp: Stop according to the deceleration ramp

3 / Torque Ramp: Stop according to the torque ramp

When [1 / Deceleration Ramp] is selected, the motor stops according to the deceleration ramp set via parameter P4-03.

When [3 / Torque Ramp] is selected, the motor stops according to the torque ramp set via parameter P5-15.

Modified parameters will not become active in the deceleration state.

Modified settings become active the next time the motor moves.

P5-15	Current for Halt	Minimum value	1	Unit	Related control mode		
		Factory setting	1	0.01 Arms	P	V / Vz	T / Tz
		Maximum value	46300		MS	S	–

Parameter function: **MODBUS address: 4380**

Current for Halt

In the case of a Halt, the current limit (_Imax_act) is one of the following values (whichever is lowest):

- The value set via this parameter
- Maximum current of motor
- Maximum output current of the drive

Further current limitations caused by I^2T monitoring are also taken into account during a Halt.

In increments of 0.01 Arms

Modified settings become active immediately.

Setting of the Quick Stop Function settings

The Quick Stop function allows you to stop a motion that is being executed. The stopped motion cannot be resumed.

Quick Stop is triggered by a fault in error class 1 or 2. It is also possible to send a Quick Stop command to the device through the commissioning software.

When the Quick Stop function is activated, the motor motion can be stopped in two ways, which can be selected via the parameter P5-16:

- The motor stops according to the deceleration ramp, which is set via the parameter P5-17
- The motor stops according to the torque ramp, which is set via the parameter P5-18

In addition, the parameter P5-16 can be used to further set the operating state of the device after the motion has stopped to “7 - Quick Stop Active” or "9 - Error”.
P5-16

P5-16	Quick Stop option code.	Minimum value	-2	Unit	Related control mode		
		Factory setting	6	–	P	V / Vz	T / Tz
		Maximum value	7		MS	S	–

Parameter function: **MODBUS address: 1584**

Quick Stop option code.

-2 / Torque ramp (Fault): Use torque ramp and transit to operating state 9 Fault

-1 / Deceleration Ramp (Fault): Use deceleration ramp and transit to operating state 9 Fault

6 / Deceleration ramp (Quick Stop): Use deceleration ramp and remain in operating state 7 Quick Stop

7 / Torque ramp (Quick Stop): Use torque ramp and remain in operating state 7 Quick Stop

When [-1/Deceleration Ramp (Error)] or [6/Deceleration Ramp (Quick Stop)] are selected, the motor stops according to the deceleration curve set in the parameter P5-17.

When [-2/Torque Ramp (Error)] or [7/Torque Ramp (Quick Stop)] are selected, the motor stops according to the deceleration torque set in the parameter P5-18.

Modified parameters will not become active in the deceleration state.

Modified settings become active the next time the motor moves.

P5-17	Deceleration ramp for Quick Stop	Minimum value	1	Unit	Related control mode		
		Factory setting	6000	usr_a	P	V / Vz	T / Tz
		Maximum value	2147483647		MS	S	–

Parameter function: **MODBUS address: 1572**

Deceleration ramp for Quick Stop

Deceleration ramp for a software stop or an error with error class 1 or 2.

Modified settings become active the next time the motor moves.

P5-18	Current for Quick Stop.	Minimum value	1	Unit	Related control mode		
		Factory setting	1	0.01 Arms	P	V / Vz	T / Tz
		Maximum value	46300		MS	S	–

Parameter function: **MODBUS address: 4378**

Current for Quick Stop.

In the case of a Quick Stop, the current limit (_Imax_act) is one of the following values (whichever is lowest):

- The value set via this parameter
- Maximum current of motor
- Maximum output current of the drive

Further current limitations caused by I2t monitoring are also taken into account during a Quick Stop.

In increments of 0.01 Arms

Modified settings become active immediately.

Setting of the Stop Mode in the Case of Disable and Error

You can set the stop mode of the motor when the servo drive reports an error and disable, and what mode the motor is in when it stops, by the ones and tens digits of the parameter P5-19 respectively:

- The stop mode available for the motor when the servo drive reports an error includes dynamic braking (DB) and free coasting, and the mode after the motor stops includes DB and free coasting.
- The servo drive is disabled, the motor can be stopped by DB, free coasting and deceleration according to the deceleration curve, and others, and the mode after the motor stops includes DB and free coasting.

⚠CAUTION

UNINTENDED MOVEMENT

- The DB should only be used for emergency stops. When the DB function at high motor speed is used, it may cause mechanical shock and generate noise.
- Do not use the DB function frequently. When the DB function at high motor speed is used, maintain a minimum interval of 10 minutes.
- If the servo motor is driven by an external force as a generator, a short-circuit current will pass through the device and servo motor when the DB function is active. If the servo motor is continuously driven by an external force, smoke and fire may occur.
- To prevent the system from unintended equipment operation, the servo motor with the holding brake function cannot select the stop mode when the servo drive is disabled. The system quickly stops the motor motion at a fixed deceleration speed, and then closes the holding brake control.

Failure to follow these instructions can result in injury or equipment damage.

P5-19	Stop mode of the motor in case of the servo disabled or reporting error	Minimum value	0	Unit	Related control mode		
		Factory setting	0	–	P	V / Vz	T / Tz
		Maximum value	42		MS	S	–

Parameter function: **MODBUS address: 1680**

Stop mode of motor in case of the servo disabled or reporting error

Parameter value	Function	Value	Stop mode of servo motor	Status after the servo motor stops
L XXXX[]	Stop mode of the motor in case of a fault in Error Class 2...4	0	Free coasting	Free coasting
		1	Dynamic braking (DB)	Dynamic braking (DB)
		2	Dynamic braking (DB)	Free coasting
L XXX[]X	Stop mode of the motor after the servo is disabled	0	Free coasting	Free coasting
		1	Dynamic braking (DB)	Dynamic braking (DB)
		2	Dynamic braking (DB)	Free coasting
		3	Deceleration Ramp (DEC)	Dynamic braking (DB)
		4	Deceleration Ramp (DEC)	Free coasting

When 3 and 4 are selected as the stop mode of the motor after the servo is disabled, the motor stops using deceleration ramp set via the parameter P4-03.

For example:

When P5-19 = 0021:

- • If an error of Error Class 3/4 occurs, the motor will decelerate and stop using DB, and remain in the DB state after stopping.
- • If the motor is disabled during operation, the motor will decelerate and stop using DB, and remain in the free coasting state after stopping.

Modified settings become active immediately.

Setting the Motor's Maximum Continuous Load Rate

The user can set parameters to limit the maximum continuous current load rate of the motor at standstill and during motion to prevent excessive stator current from causing additional heat and to protect the motor.

This function also limits the continuous torque output performance when the motor is at standstill and during motion.

When the motor is at standstill, the motor continuous current load rate is up to 100% of the current rating.

When the motor is in motion, the motor continuous current load rate is up to 115% of the current rating.

P6-43	Maximum current load rate of the motor at standstill	Minimum value	866	Unit	Related control mode		
		Factory setting	1000	0.1%	P	V / Vz	T / Tz
		Maximum value	1000		MS	S	–

Parameter function: **MODBUS address: 1394**

Maximum current load rate of the motor at standstill

The maximum current load rate when the motor is at standstill is limited to prevent excessive stator single-phase current from causing additional heating of the motor and to protect the motor. This function also limits the torque output of the motor at standstill.

In increments of 0.1%.

Modified settings become active immediately.

P6-44	Maximum continuous current load rate when the motor is in operation	Minimum value	1000	Unit	Related control mode		
		Factory setting	1000	0.1%	P	V / Vz	T / Tz
		Maximum value	1150		MS	S	–

Parameter function: **MODBUS address: 1396**

Maximum continuous current load rate when the motor is in operation

In increments of 0.1%.

Modified settings become active immediately.

Holding Brake Control Function

You can assign the function “24 - Holding Brake Release” to an output terminal through the setting of the drive output parameters. Now, the device can automatically control the opening and closing of the motor holding brake, namely, to open the brake when the power stage is enabled and close the brake when the power stage is disabled.

NOTE: The function setting of the output points will be changed when restoring the factory settings, which may cause the brake to be released accidentally.

If the servo drive is connected to a motor with a holding brake, when the machine is enabled, the machine is automatically delayed for a period of time until the holding brake is released and the machine's operating state switches to “6 - Device Enable”, during which the motor remains energized. It is possible to add an additional time delay for releasing the holding brake by parameter, where the device switches to “6-Device Enable” only when the full time delay is completed.

Similarly, if the servo drive is connected to a motor with a holding brake, when the device is enabled, the device is automatically delayed for a period of time, during which the motor remains energized. It is possible to add an additional time delay for applying the holding brake by parameter, where the motor remains energized until the entire time delay is completed.

The time sequence of brake releasing and applying is shown in the figure:

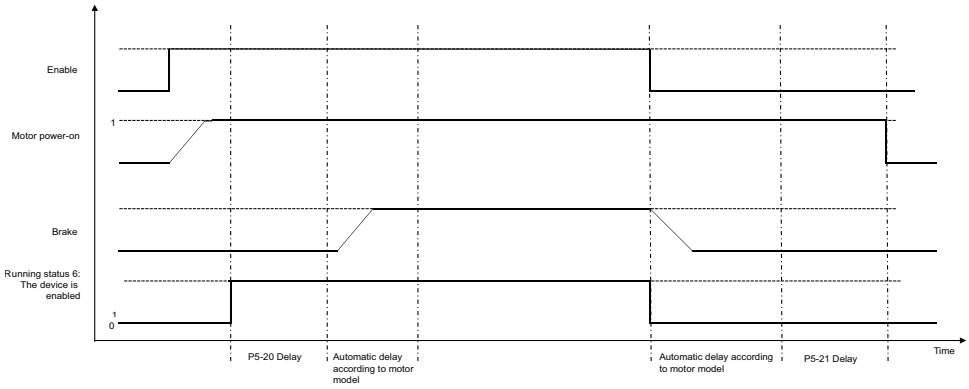

P5-20	Additional time delay for releasing the holding brake	Minimum value	0	Unit	Related control mode		
		Factory setting	0	1 ms	P	V / Vz	T / Tz
		Maximum value	400		MS	S	–

Parameter function: **MODBUS address: 1294**

Additional time delay for releasing the holding brake

The overall time delay for releasing the holding brake is the mechanical time for releasing the brake plus the time value set via this parameter.

Setting can only be modified if power stage is disabled.

Modified settings become active the next time the motor moves.

P5-21	Additional time delay for applying the holding brake.	Minimum value	0	Unit	Related control mode		
		Factory setting	0	1 ms	P	V / Vz	T / Tz
		Maximum value	1000		MS	S	–

Parameter function: **MODBUS address: 1296**

Additional time delay for applying the holding brake

The total time of applying the motor holding brake is the mechanical time of releasing the brake plus the time value set in this parameter.

Setting can only be modified if power stage is disabled.

Modified settings become active the next time the motor moves.

Software Limit Function

You can monitor the motion through the software limit function, which consists of a positive limit and a negative limit.

When either of the positive or negative limits is triggered, the Quick Stop function is triggered and motion is stopped. The servo drive displays an error message and switches the device’s operating state to “7 - Quick Stop Active”.

The limit triggering fault can be cleared by the Error Reset function, after which the device's operating state switches to “6 - Device Enable”.

After that, you can try to continue the device’s movement, but only in the opposite direction. For example: For example: If a positive limit is triggered, the subsequent movement can only be in the negative direction. If the subsequent motion is still in the positive direction, the servo drive displays the error message again and switches the device's operating state to “7 - Quick Stop Active”.

Software limit switches can only be activated if the zero point is valid. it is not maintained after power-down, and it becomes active only after the zero-return operation.

When the software limit is used, the following parameters need to be set:

- Set which one of the positive or negative limit is activated by P6-11.
- Set via P6-12 whether the motion stop point is after the limit switch position or at the limit switch position when the limit is triggered. If you want the motion stop to be at the limit switch position, the parameter P5-16 must be set to “6/ Deceleration Ramp (Quick Stop)”; if the parameter value is set to “7/ Torque Ramp (Quick Stop)”, the position of the motion stop is not guaranteed due to the difference in load.
- Set the position values of the positive and negative limits by P6-13 and P6-14.

P6-11	**Activation of software limit switches**	**Minimum value**	**0**	**Unit**	**Related control mode**		
		Factory setting	**0**	**–**	**P**	**–**	**–**
		Maximum value	**3**		**MS**	**S**	**–**
Parameter function:			**MODBUS address: 1542**				

Activation of software limit switches

0 / None: Deactivated

1 / SWLIMP: Activation of software limit switches positive direction

2 / SWLIMN: Activation of software limit switches negative direction

3 / SWLIMP+SWLIMN: Activation of software limit switches both directions

Software limit switches can only be activated if the zero point is valid.

Modified settings become active immediately.

P6-12	**Behavior when position limit is reached.**	**Minimum value**	**0**	**Unit**	**Related control mode**		
		Factory setting	**0**	**–**	**P**	**V / Vz**	**T / Tz**
		Maximum value	**1**		**MS**	**S**	**–**
Parameter function:			**MODBUS address: 1678**				

Behavior when position limit is reached.

0 / Standstill Behind Position Limit: Quick Stop is triggered at position limit and standstill is reached behind position limit.

1 / Standstill At Position Limit: Quick Stop is triggered in front of position limit and standstill is reached at position limit.

Modified settings become active immediately.

P6-13	Positive position limit for software limit switch	Minimum value	-2147483648	Unit	Related control mode		
		Factory setting	2147483647	usr_p	P	–	–
		Maximum value	2147483647		MS	S	–

Parameter function: **MODBUS address: 1544**

Positive limit position value

If a user-defined value entered is outside of the permissible range, the limit switch limits are automatically set to the maximum user-defined value.

Setting can only be modified if power stage is disabled.

Modified settings become active the next time the motor moves.

P6-14	Negative position limit for software limit switch	Minimum value	-2147483648	Unit	Related control mode		
		Factory setting	-2147483648	usr_p	P	–	–
		Maximum value	2147483647		MS	S	–

Parameter function: **MODBUS address: 1546**

Value of negative software limit position

If a user-defined value entered is outside of the permissible range, the limit switch limits are automatically set to the minimum user-defined value.

Setting can only be modified if power stage is disabled.

Modified settings become active the next time the motor moves.

Hardware Limit Function

Movements can be monitored using limit switches. A positive limit switch and a negative limit switch can be used for monitoring. When the movement exceeds the safe range, the servo motor can be forced to stop the movement via the input signal from the limit switches.

If the positive or negative limit switch is tripped, the movement stops. An error message is generated and the operating state switches to 7 Quick Stop Active.

When a limit error occurs, the lowest bit of the parameter P6-41 can be used to set how to reset the error message:

- When the lowest bit of P6-41 is set to 0, the error message can be reset by a fault reset operation, and the operating state will switch to “6 - Device Enable”. Now, the movement can continue, but only in the opposite direction.
- When the lowest bit of P6-41 is set to 1, the movement command can be sent directly to the device in the opposite direction of the triggered limit, the error message is reset automatically, and the motor moves in the opposite direction directly.

For example: If the positive limit is triggered, an error message E A302 is generated and the operating state switches to “7 - Quick Stop Active”.

When a limit error occurs, the xxth bit of the parameter P6-41 can be used to set how to handle pulses received while the limit is triggered:

- If xxxxxx is set to 0, the drive will ignore the pulses received while the limit is triggered. When inverted motion begins, the motor will immediately move in the opposite direction.
- If xxxxxx is set to 1, the drive will buffer the pulses received while the limit is triggered. When inverted motion begins, the drive will first internally reduce the pulses buffered inversely during the limit is triggered, and the motor will only start moving in the opposite direction after the buffered pulses are reduced to 0.

Analog Encoder Output

The output analog encoder signal is a 3.3V-level RS-422 differential signal, the output signal type is A/B quadrature, and the output pulses come with 4x frequency.

The user can set the reference source to be followed by the analog encoder output function via the following parameters:

- Follow the actual motor position, while an Index signal is output for the motor per turn.
- Follow the commanded motor position, while an Index signal is output for the motor per turn.
- Directly forward input pulse train signals.

You can also set the resolution of the analog encoder output signal (non-forwarding input pulse train signal mode), as well as the direction of the analog encoder output signal via the parameters.

P0-18	Resolution of analog encoder output	Minimum value	8	Unit	Related control mode		
		Factory setting	10000	EncInc	P	V / Vz	T / Tz
		Maximum value	4294967295		MS	S	–

Parameter function: **MODBUS address: 1380**

Resolution of analog encoder output

It defines the number of analog pulses output by the servo driver for one revolution the motor (A/B phase quadrature signal with 4x frequency). For each revolution of the motor, the servo driver outputs an Index signal.

Setting can only be modified if power stage is disabled.

Modified settings become active the next time the product is powered on.

P0-19	Direction of analog encoder output	Minimum value	0	Unit	Related control mode		
		Factory setting	0	–	P	V / Vz	T / Tz
		Maximum value	1		MS	S	–

Parameter function: **MODBUS address: 1682**

Direction of analog encoder output

0/Inversion Off: Inversion Off: The direction of analog encoder output is the same as that of the motor's rotation.

1/Inversion On: The direction of analog encoder output is opposite to that of the motor's rotation.

Setting can only be modified if power stage is disabled.

Modified settings become active the next time the product is powered on.

P0-20	Analog encoder output type	Minimum value	0	Unit	Related control mode		
		Factory setting	1	–	P	V / Vz	T / Tz
		Maximum value	3		MS	S	–

Parameter function:

MODBUS address: 1342

0 / Off: PTO interface disabled

1 / Esim pAct Enc: Encoder simulation based on actual position of encoder

2 / Esim pRef: Encoder simulation based on reference position (_p_ref)

3 / Esim PTI: Directly the signal from PTI interface

Setting can only be modified if power stage is disabled.

Modified settings become active the next time the motor moves.

Velocity Limitation Function

When torque control is performed, the motor is controlled in the form of controlling torque output, but not the motor velocity. If the torque command of the motor is higher than the load-side torque now, the motor continues to accelerate. In this case, the motor velocity must be limited by the velocity limitation function to avoid damage to the motor or the load.

The motor velocity is limited by the following methods**:**

- Maximum velocity of the motor (read only)

Velocity limitation through the maximum velocity (P4-18)

- Velocity limitation through analog inputs

- Velocity limitation through the internal velocity command table

- Velocity limitation through the drive's input point functions

The actual motor velocity limit is the minimum of the above velocity limitations.

Velocity limitation through the maximum velocity

P4-18	**Velocity limitation**	**Minimum value**	**1**	**Unit**	**Related control mode**		
		Factory setting	**13200**	**usr_v**	**P**	**V / Vz**	**T / Tz**
		Maximum value	**2147483647**		**MS**	**S**	**–**
Parameter function:			**MODBUS address: 4384**				

Velocity limitation

During operation, the velocity limit is one of the following values (whichever is lowest):

- Value set via this parameter

- Maximum velocity of motor

– The velocity threshold defined in parameter P3-60 when the velocity limitation is activated via input

Modified settings become active immediately.

Velocity limitation through analog inputs:

By setting the function of the analog input to "3/velocity limitation", the relationship between the analog voltage command and the velocity limitation is associated via the analog input velocity limitation parameter.

This parameter describes the velocity limitation represented by the 10V analog input voltage in profile velocity, from which the velocity limitations represented by other analog input voltages can be linearly derived.

P3-31	**Analog input 1: Input function**	**Minimum value**	**0**	**Unit**	**Related control mode**		
		Factory setting	**(Related to mode)**	**–**	**–**	**V / Vz**	**T / Tz**
		Maximum value	**4**		**–**	**–**	**–**
Parameter function:			**MODBUS address: 2332**				

0 / No function: No function.

1 / Target Velocity: Target velocity in profile velocity.

2 / Target Torque: Target torque in profile torque.

3 / Velocity Limitation: Velocity limitation in profile velocity or profile torque.

4 / Torque Limitation: Torque limitation in profile velocity or profile torque.

Setting can only be modified if power stage is disabled.

Modified settings become active immediately.

P3-38	Analog input 2: Input function	Minimum value	0	Unit	Related control mode		
		Factory setting	(Mode dependent)	–	–	V / Vz	T / Tz
		Maximum value	4		–	–	–

Parameter function: **MODBUS address: 2342**

0 / No function: No function.

1 / Target Velocity: Target velocity in profile velocity.

2 / Target Torque: Target torque in profile torque.

3 / Velocity Limitation: Velocity limitation in profile velocity or profile torque.

4 / Torque Limitation: Torque limitation in profile velocity or profile torque.

Setting can only be modified if power stage is disabled.

Modified settings become active immediately.

P4-16	Analog input 1: Velocity limitation represented by the 10V analog input	Minimum value	1	Unit	Related control mode		
		Factory setting	3000	usr_v	–	V / Vz	T / Tz
		Maximum value	2147483647		–	–	–

Parameter function: **MODBUS address: 2336**

Velocity limitation represented by 10 V analog input

Please refer to Setting Analog Input Gains, page 216for detailed parameter description.

Setting can only be modified if power stage is disabled.

Modified settings become active immediately.

P4-17	Analog input 2: Velocity limitation represented by the 10V analog input	Minimum value	1	Unit	Related control mode		
		Factory setting	3000	usr_v	–	V / Vz	T / Tz
		Maximum value	2147483647		–	–	–

Parameter function: **MODBUS address: 2346**

Velocity limitation represented by 10 V analog input

Please refer to Setting Analog Input Gains, page 216for detailed parameter description.

Setting can only be modified if power stage is disabled.

Modified settings become active immediately.

Velocity limitation through the internal velocity command table:

In torque control mode, an internal velocity command can be selected as velocity limitation through the input point function INTVCM0/ INTVCM1/ INTVCM2.

P4-09 ~ P4-15	**Internal velocity command n / internal velocity limitation n**	**Minimum value**	**-2147483648**	**Unit**	**Related control mode**		
		Factory setting	**0**	**usr_v**	**–**	**V / Vz**	**T / Tz**
		Maximum value	**2147483647**		**–**	**–**	**–**
Parameter function:			**MODBUS address: –**				
Internal velocity command n / internal velocity limitation n **Modified settings become active immediately.**							

Velocity limitation through the drive's input point functions:

The user can limit the motor velocity to a preset value through the input point function "8. Velocity Limitation".

P3-60	**Velocity limitation via input**	**Minimum value**	**0**	**Unit**	**Related control mode**		
		Factory setting	**10**	**usr_v**	**P**	**V / Vz**	**T / Tz**
		Maximum value	**2147483647**		**MS**	**S**	**–**
Parameter function:			**MODBUS address: 1596**				
Velocity limitation via input The input point function limits the velocity below the value set via this parameter. **Modified settings become active immediately.**							

Torque Limitation Function

The user can limit the motor torque by the following methods**:**

- **(**Maximum motor current**)**
- **(**Maximum current of the drive**)**
- Torque limitation by setting the maximum torque
- Torque limitation through analog inputs
- Torque limitation through the internal torque command table
- Torque limitation through the drive's input point functions

The actual motor torque limit is the minimum of the above torque limitations.

Velocity limitation by setting the maximum velocity of the motor:

P4-35	**Current limitation**	**Minimum value**	**0**	**Unit**	**Related control mode**		
		Factory setting	**0**	**0.01 Arms**	**P**	**V / Vz**	**T / Tz**
		Maximum value	**46300**		**MS**	**S**	**–**
Parameter function:			**MODBUS address: 4376**				

Current limitation

During operation, the actual current limit is one of the following values (whichever is lowest):

- Value set via this parameter
- Maximum current of motor
- Maximum current of drive

– The torque threshold defined in parameter P3-61 when the torque limitation is activated via input.

In increments of 0.01 Arms

Modified settings become active immediately.

Torque limitation through analog inputs:

By setting the function of the analog input to “4/torque limitation”, the relationship between the analog voltage command and the torque limitation is associated via the analog input torque limitation parameter.

This parameter describes the torque limitation represented by the 10V analog input voltage in profile torque, from which the torque limitations represented by other analog input voltages can be linearly derived.

P3-31	Analog input 1: Input function	Minimum value	0	Unit	Related control mode		
		Factory setting	(Related to mode)	–	–	V / Vz	T / Tz
		Maximum value	4		–	–	–

Parameter function: **MODBUS address: 2332**

0 / No function: No function.

1 / Target Velocity: Target velocity in profile velocity.

2 / Target Torque: Target torque in profile torque.

3 / Velocity Limitation: Velocity limitation in profile velocity or profile torque.

4 / Torque Limitation: Torque limitation in profile velocity or profile torque.

Setting can only be modified if power stage is disabled.

Modified settings become active immediately.

P3-33	Analog input 1: Voltage value is inversed	Minimum value	0	Unit	Related control mode		
		Factory setting	0	–	–	V / Vz	T / Tz
		Maximum value	1		–	–	–

Parameter function: **MODBUS address: 2362**

0 / Inversion Off: Voltage value is not inversed.

1 / Inversion On: Voltage value is inversed.

Modified settings become active immediately.

P3-34	Analog input 1: Input offset value	Minimum value	-5000	Unit	Related control mode		
		Factory setting	0	1 mV	–	V / Vz	T / Tz
		Maximum value	5000		–	–	–

Parameter function: **MODBUS address: 2326**

Input offset value of analog input 1

Actual value of analog input 1 = Input voltage of analog input 1 - input offset value of analog input 1.

Modified settings become active immediately.

P3-38	Analog input 2: Input function	Minimum value	0	Unit	Related control mode		
		Factory setting	(Mode dependent)	–	–	V / Vz	T / Tz
		Maximum value	4		–	–	–

Parameter function: **MODBUS address: 2342**

0 / No function: No function.

1 / Target Velocity: Target velocity in profile velocity.

2 / Target Torque: Target torque in profile torque.

3 / Velocity Limitation: Velocity limitation in profile velocity or profile torque.

4 / Torque Limitation: Torque limitation in profile velocity or profile torque.

Setting can only be modified if power stage is disabled.

Modified settings become active immediately.

Velocity limitation through the internal torque command table:

In velocity control mode, an internal torque command can be selected as torque limitation through the input point function TCM0/ INTTCM1/ TCM2.

P4-26 ... P4-32	Internal torque command n / internal torque limitation n	Minimum value	-30000	Unit	Related control mode		
		Factory setting	0	0.1%	–	V / Vz	T / Tz
		Maximum value	30000		–	–	–

Parameter function: **MODBUS address: –**

Internal torque command n / internal torque limitation n

Modified settings become active immediately.

Torque limitation through the drive's input point functions:

The user can limit the motor velocity to a preset value through the input point function "6. Current Limitation".

P3-61	Torque limitation via input	Minimum value	0	Unit	Related control mode		
		Factory setting	1000	0.1 %	P	V / Vz	T / Tz
		Maximum value	30000		MS	S	–

Parameter function: **MODBUS address: 1614**

Torque limitation via input

The torque limitation value via input is lower than the value set via this parameter.

In increments of 0.1 %.

Modified settings become active immediately.

Operation Mode Homing

Overview

Description

In the operating mode Homing, a reference is generated between a mechanical position and the actual position of the motor.

A reference between a mechanical position and the actual position of the motor is generated by means of a reference movement or by means of position setting.

A successful reference movement or position setting homes the motor and the zero point becomes valid.

The zero point of the movement range is the point of reference for absolute movements in the operating modes Profile Position and Motion Sequence.

Methods

Different methods are available:

- **Reference movement to a limit switch**

  In the case of a reference movement to a limit switch, a movement to the negative limit switch or the positive limit switch is performed.

  When the limit switch is reached, the movement is stopped and then a movement is made back to the switching point of the limit switch.

  From the switching point of the limit switch, a movement is made to the next index pulse of the motor or to a parameterizable distance from the switching point.

  The position of the index pulse or the position of the parameterizable distance from the switching point is the reference point.
- **Reference movement to the reference switch**

  In the case of a reference movement to the reference switch, a movement to the reference switch is performed.

  When the reference switch is reached, the movement is stopped and then a movement is made to the switching point of the reference switch.

  From the switching point of the reference switch, a movement is made to the next index pulse of the motor or to a parameterizable distance from the switching point.

  The position of the index pulse or the position of the parameterizable distance from the switching point is the reference point.
- **Reference movement to the index pulse**

  In the case of a reference movement to the index pulse, a movement is made from the actual position to the next index pulse. The position of the index pulse is the reference point.
- **Position setting**

  In the case of position setting, the actual position of the motor is set to a desired position value.

  A reference movement must be terminated without interruption for the new zero point to be valid. If the reference movement is interrupted, it must be started again.

  Motors with multi-turn encoder deliver a valid zero point after they are powered on.

Starting the Operating Mode

The operating mode is selected by writing 6 in parameter *DCOMopmode* (6060_h). Writing the parameter value causes the operating mode to start.

The movement is started via the control word.

Terminating the Operating Mode

The operating mode is terminated when the motor is at a standstill and one of the following conditions is met:

- Homing successful
- Stop caused by “Halt” or “Quick Stop”
- Stop caused by a detected error

Mechanical Blocking without Index Pulse

Homing methods -3 and -4:

These methods reference a mechanical limit position.

With Mode -3 the drive moves negative and with -4 positive toward the mechanical stop.

- Phase 1

  Approaching the mechanical stop at the referencing speed. The torque will be limited at the start of homing to HMtq_Lim (Homing torque limit).

  To recognize the mechanical stop, a test will be run to determine whether the drive is 1) at the current limit at 2) zero speed. The mechanical stop is considered to be recognized when both conditions have been met through HMblock_time (Homing blocking time).
- Phase 2

  If the mechanical stop has been recognized, the home position will be set at this position and the torque limit HMtq_Lim (Homing torque limit) will be canceled again.

Mechanical Blocking with Index Pulse

Homing methods -1 and -2:

These methods are used to move to a mechanical stop and finally referenced to index pulse.

With Mode -1 the drive moves negative and with -2 positive toward the mechanical stop.

- Phase 1

  Identical with homings -3 and -4
- Phase 2

  When the mechanical stop is recognized, the torque limit HMtq_Lim (Homing torque limit) is canceled again and referenced in the reverse direction of travel with HMv_out to the index pulse.

  During homing to a mechanical stop, specific monitoring procedures may trigger a error due to the mechanical blocking. This includes the position error monitoring, monitoring of speed difference and block monitoring.

  Deactivate the three monitoring procedures for the period of homing, which means from the start of homing to the recognition of the mechanical stop after expiration of the HMblock_time (Homing blocking time).

Homing Methods

Reference Movement to a Limit Switch

In the case of a reference movement to a limit switch, a movement to the negative limit switch or the positive limit switch is performed.

When the limit switch is reached, the movement is stopped and then a movement is made back to the switching point of the limit switch.

From the switching point of the limit switch, a movement is made to the next index pulse of the motor or to a parameterizable distance from the switching point.

The position of the index pulse or the position of the parameterizable distance from the switching point is the reference point.

The illustration below shows a reference movement to a limit switch.

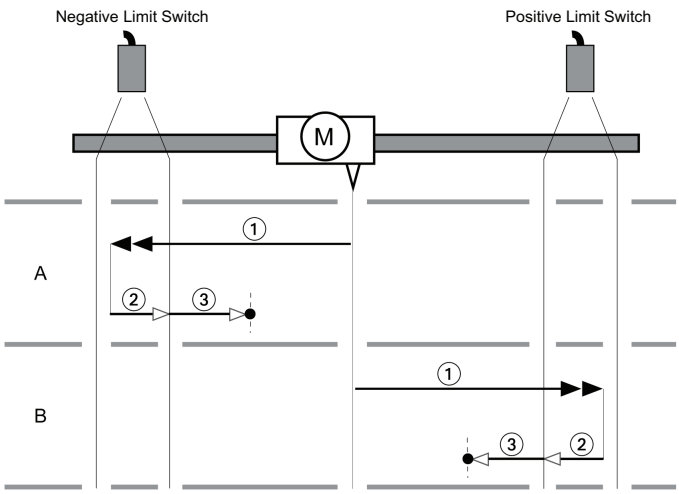

1 Movement to limit switch at velocity *HMv* (6099:1_h, P5-03)

2 Movement to the switching point of the limit switch at velocity *HMv_out* (6099:2_h, P5–04)

3 Movement to index pulse or movement to a distance from the switching point at velocity *HMv_out* (6099:2_h, P5–04)

TYPE A

Method 1: Movement to the index pulse.

Method 17: Movement to distance from switching point.

TYPE B

Method 2: Movement to the index pulse.

Method 18: Movement to distance from switching point.

Reference Movement to the Reference Switch in Positive Direction

The illustration below shows a reference movement to the reference switch in positive direction.

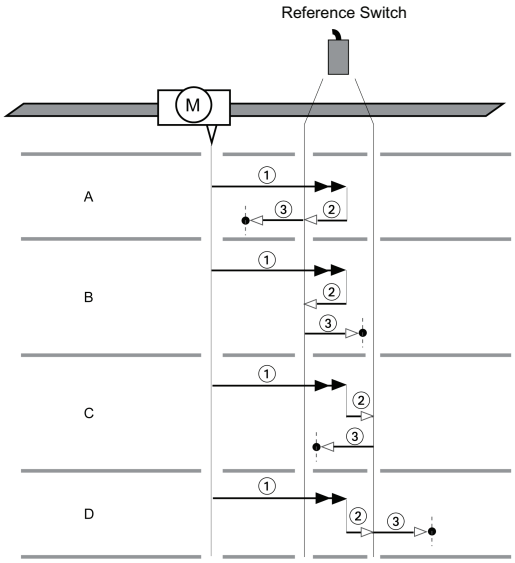

1 Movement to reference switch at velocity *HMv* (6099:1_h, P5-03)

2 Movement to the switching point of the reference switch at velocity *HMv_out* (6099:2_h, P5–04)

3 Movement to index pulse or movement to a distance from the switching point at velocity *HMv_out* (6099:2_h, P5–04)

Type A

Method 7: Movement to the index pulse.

Method 23: Movement to distance from switching point.

Type B

Method 8: Movement to the index pulse.

Method 24: Movement to distance from switching point.

Type C

Method 9: Movement to the index pulse.

Method 25: Movement to distance from switching point.

Type D

Method 10: Movement to the index pulse.

Method 26: Movement to distance from switching point.

Reference Movement to the Reference Switch in Negative Direction

The illustration below shows a reference movement to the reference switch in negative direction.

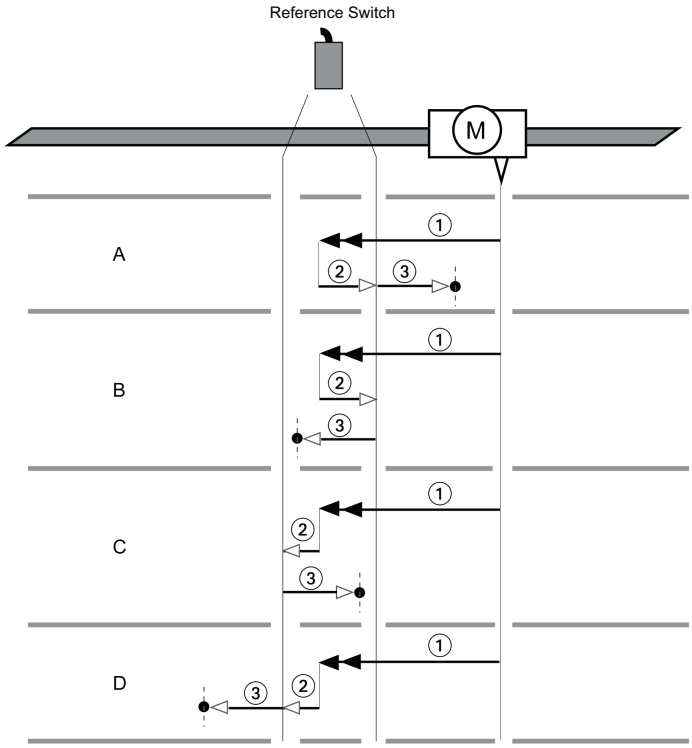

1 Movement to reference switch at velocity *HMv* (6099:1_h, P5-03)

2 Movement to the switching point of the reference switch at velocity *HMv_out* (6099:2_h, P5–04)

3 Movement to index pulse or movement to a distance from the switching point at velocity *HMv_out* (6099:2_h, P5–04)

Type A

Method 11: Movement to the index pulse.

Method 27: Movement to distance from switching point.

Type B

Method 12: Movement to the index pulse.

Method 28: Movement to distance from switching point.

Type C

Method 13: Movement to the index pulse.

Method 29: Movement to distance from switching point.

Type D

Method 14: Movement to the index pulse.

Method 30: Movement to distance from switching point.

Reference Movement to the Index Pulse

The illustration below shows a reference movement to the index pulse.

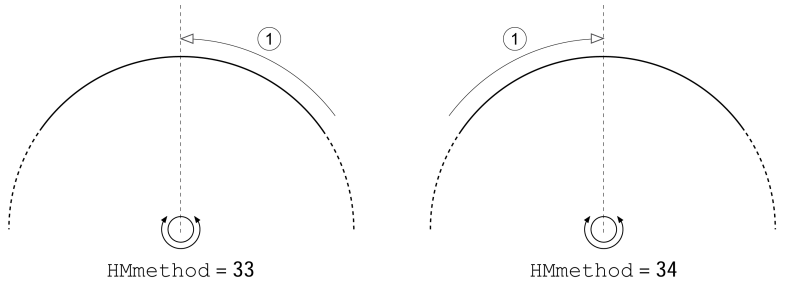

1 Movement to index pulse at velocity *HMv_out* (6099:2_h, P5–04)

Position Setting

By means of position setting, the actual position of the motor is set to the position value in parameter *HMp_setP* (301B:16_h). This also defines the zero point.

Position setting is only possible when the motor is at a standstill. Any active position deviation remains active and can still be compensated for by the position controller after position setting.

Example

Movement by 4000 user-defined units with position setting

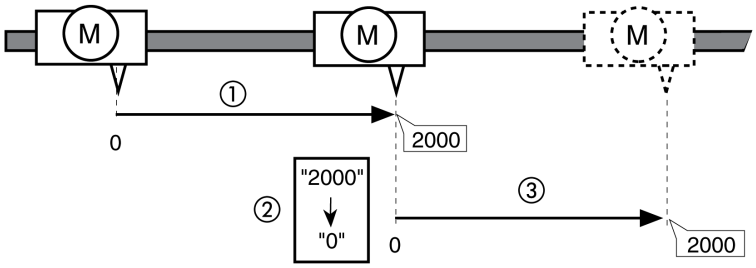

1 The motor is positioned by 2000 user-defined units.

2 By means of position setting to 0, the actual position of the motor is set to position value 0 which, at the same time, defines a new zero point.

3 When a new movement by 2000 user-defined units is triggered, the new target position is 2000 user-defined units.

Parameterization

The illustration below provides an overview of the adjustable parameters in different homing methods.

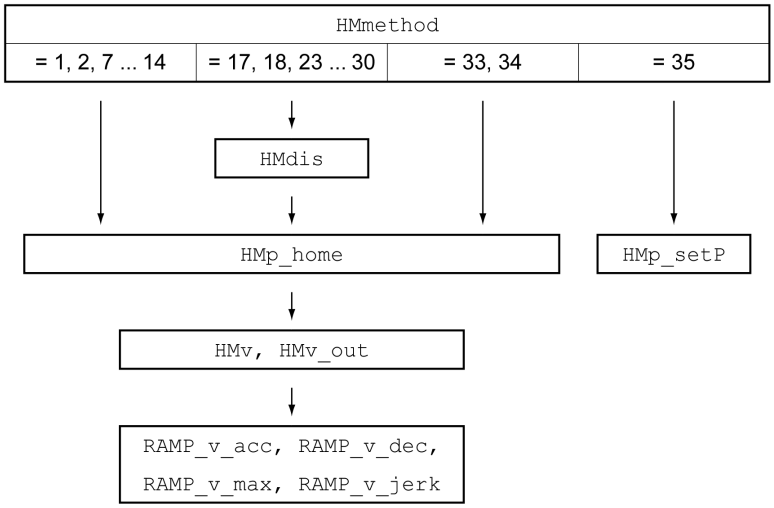

The illustration below provides an overview of the adjustable parameters in Homing mode.

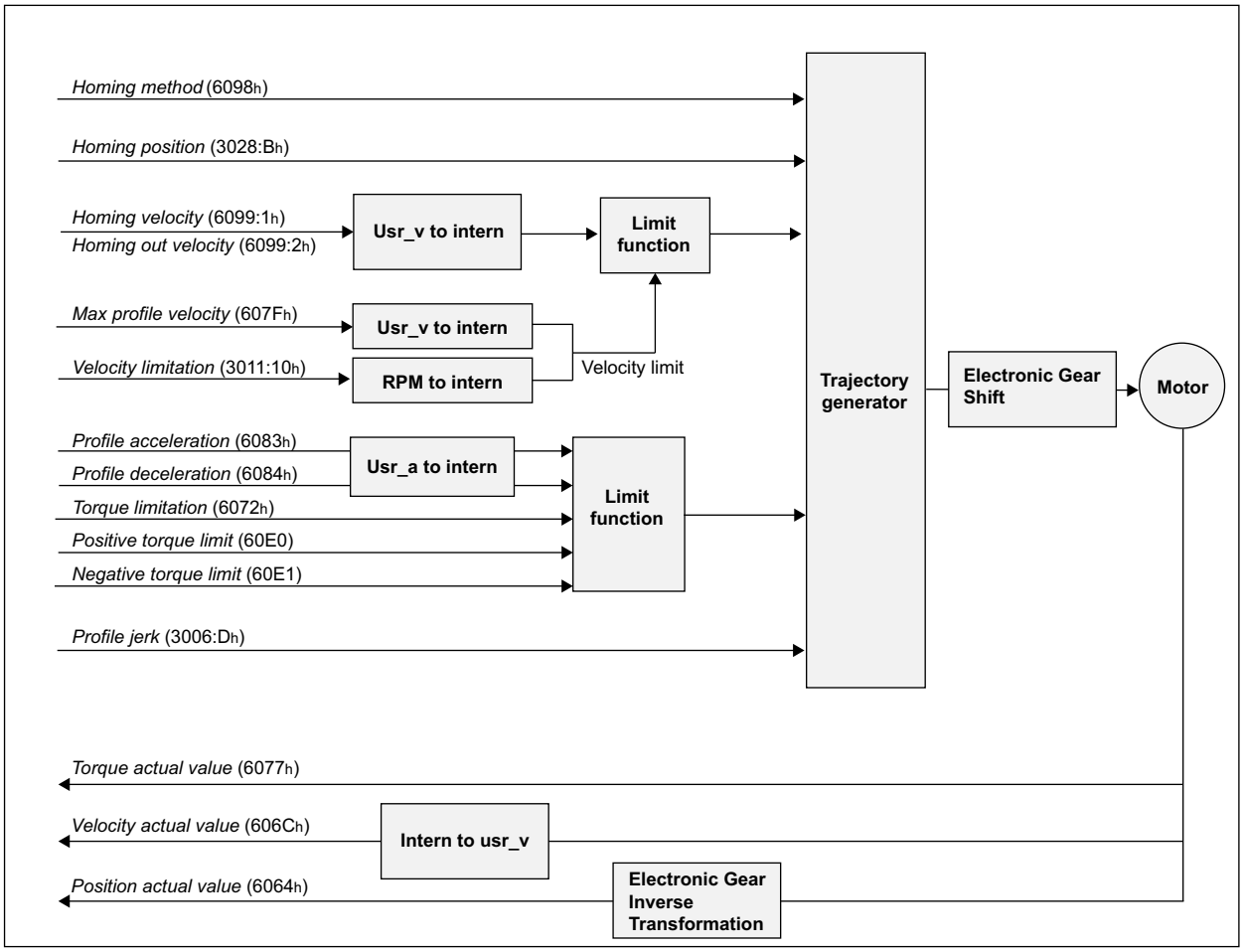

P5-38	Homing: Lock time	Minimum value	10	Unit	Related control mode		
		Factory setting	1000	ms	P	V / Vz	T / Tz
		Maximum value	10000		MS	S	–

Parameter function: **MODBUS address: 10272**

Lock time for Homing

Modified settings become active immediately.

P5-39	Homing: Torque limit	Minimum value	0	Unit	Related control mode		
		Factory setting	1000	0.1%	P	V / Vz	T / Tz
		Maximum value	3500		MS	S	–

Parameter function: **MODBUS address: 10274**

Torque limit for Homing

Modified settings become active immediately.

P5-40	Homing: Timeout setting	Minimum value	10	Unit	Related control mode		
		Factory setting	60	s	P	V / Vz	T / Tz
		Maximum value	65535		MS	S	–

Parameter function: **MODBUS address: 10276**

Homing timeout

Modified settings become active immediately.

PWM Frequency of the Power Stage

PWM Frequency of the Power Stage

The following parameter allows you to set the PWM frequency of the power stage. The current threshold for switching from 16kHz to 8kHz is set as a parameter (P4-39) and is open to the user, ranging from 30% to 60% of the rated motor current, with a default value of 40%.

The setting of P4-39 is valid when P4-36 is set to 1.

P4-36	Adaptive carrier switching enable	Minimum value	0	Unit	Related control mode		
		Factory setting	0	–	P	V / Vz	T / Tz
		Maximum value	1		MS	S	–

Parameter function: **MODBUS address: 4484**

Adaptive carrier switching enable

0: Turn off the adaptive carrier switching function and the servo runs at 8 kHz all the time.

1: Turn on the adaptive carrier switching function. When the motor current is less than the switching threshold, the servo will automatically switch the running carrier to 16 kHz; when it is greater than the switching threshold, the servo will automatically switch the running carrier to 8 kHz. The switching threshold is set by P4-39.

Setting can only be modified if power stage is disabled.

Modified settings become active the next time the motor moves.

P4-37	Threshold for the number of consecutive current detections required for carrier switching	Minimum value	3	Unit	Related control mode		
		Factory setting	50	–	P	V / Vz	T / Tz
		Maximum value	1024		MS	S	–

Parameter function:	MODBUS address: 4486

Threshold for the number of consecutive current detections required for carrier switching

The parameter takes effect only when P4-36 is set to 1.

The parameter determines the sensitivity of adaptive carrier switching. The current needs to be detected as greater or less than the switching threshold carrier a number of times consecutively at P4-37 before switching takes place.

Setting can only be modified if power stage is disabled.

Modified settings become active the next time the motor moves.

P4-39	Adaptive carrier switching current threshold	Minimum value	30	Unit	Related control mode		
		Factory setting	40	%	P	V/Vz	T/Tz
		Maximum value	60		MS	S	–

Parameter function:	MODBUS address: 4698

Adaptive carrier switching current threshold

The parameter takes effect only when P4-36 is set to 1.

The parameter determines the amount of current for adaptive carrier switching: a percentage of the current motor rated current.

Setting can only be modified if power stage is disabled.

Modified settings become active the next time the motor is energized.

Flux Weaken

Overview

When the motor operates within its normal speed range, implementing Id=0 control enables the achievement of high motor performance; When the motor operates in the high-speed range, the increased counter-electromotive force coupled with a fixed bus voltage limits the voltage available for Iq output, preventing the motor from delivering power at high speeds.

The principle involves demagnetizing the internal magnetic field of the motor through a negative id current, thereby generating a smaller counter-electromotive force at the same rotational speed. This allows more voltage to be utilized for generating the q-axis current, ultimately enhancing the motor's output performance in high-speed operation.

Flux Weaken Control Diagram

The block diagram of the flux weaken algorithm is shown in the following figure. It primarily consists of two parts: one is the voltage closed-loop circuit, which generates the d-axis current; the other is the lead angle module, which produces improved response performance.

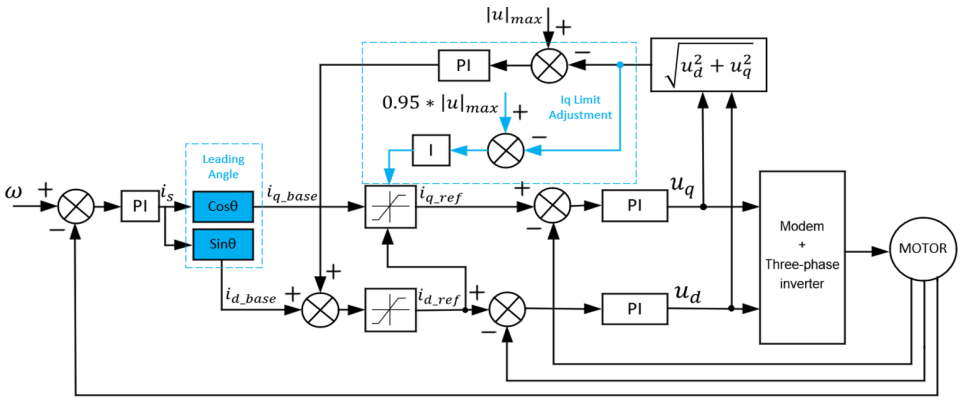

Related Parameter

The following parameter allows you to set the flux weaken function.

P1-32	Flux weakening function	Minimum value	0	Unit	Related control mode		
		Factory setting	0	–	P	V / Vz	T / Tz
		Maximum value	1		MS	S	–

Parameter function: **MODBUS address: 4382**

Flux weakening function enabled or disabled

0: Disable the function: Flux weakening function disabled.

1: Enable the function: Flux weakening function enabled.

V0201.13 and later versions support this function.

Setting can only be modified if power stage is disabled.

Modified settings become active the next time the motor moves.

P1-50	*CTRL1_FLUXWEAKENGAIN*	Minimun value	0	Unit	Relevant operating mode		
		Factory setting	50	%	P	V / Vz	T / Tz
		Maximum value	100		MS	S	–

Parameter function: **MODBUS address: 4674**

This corresponds to the PI value calculation for the flux weaken loop (similar to the concept of stiffness). Increasing this value enhances the response to d-axis commands, while decreasing it slows the response to d-axis commands.

P1-51	*CTRL1_FLUXWEAKENFILTERTAU*	Minimun value	0	Unit	Relevant operating mode		
		Factory setting	4	ms	P	V / Vz	T / Tz
		Maximum value	30		MS	S	–

Parameter function: **MODBUS address: 4676**

In applications with significant speed fluctuations, increasing this value can reduce oscillations. Generally, this parameter does not require modification.

NOTE: Higher values do not necessarily improve stability. If mismatched with the control system, excessive filtering may also cause oscillations.

P1-52	*CTRL1_FLUXWEAKENVOLTHRD*	Minimun value	90	Unit	Relevant operating mode		
		Factory setting	100	%	P	V / Vz	T / Tz
		Maximum value	100		MS	S	–

Parameter function: **MODBUS address: 4678**

When modifying this parameter, the value of Obj 7548.112 changes. Weak field calculation is triggered when the voltage usage value exceeds this variable's value.

- When flux weaken instability occurs, prioritize adjusting this parameter.
- Increasing this parameter delays the initiation of flux weaken calculation; decreasing it advances the initiation of flux weaken calculation.

DOB Disturbance Compensation

Overview

When external disturbances are applied to the system, they cause a certain drop in rotational speed, and restoring the speed requires time. By developing a Disturbance Observer (DOB) module, the magnitude of the disturbance can be monitored while simultaneously reducing the speed drop and enhancing the system's stability.

DOB Control Diagram

A second-order Linear Extended State Observer (LESO) linear disturbance observer was designed for the speed loop. The overall control block diagram is shown in the following figure:

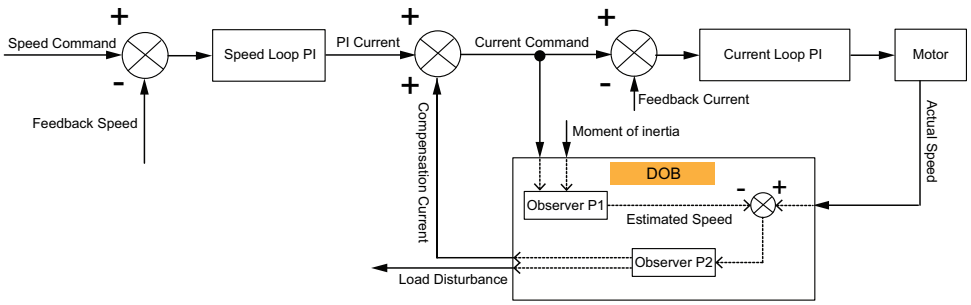

Related Parameter

The following parameter allows you to set the DOB Disturbance Compensation function.

P1-76	*CTRL1_DobEnable*	Minimun value	0	Unit	Relevant operating mode		
		Factory setting	0	-	P	V / Vz	T / Tz
		Maximum value	1		MS	S	–
Parameter function:			**MODBUS address: 4692**				
0/DOB Disturbance Compensation: Disable 1/DOB Disturbance Compensation: Enable							

P1-77	*CTRL1_DobGain*	Minimun value	500	Unit	Relevant operating mode		
		Factory setting	1000	Hz	P	V / Vz	T / Tz
		Maximum value	3000		MS	S	–
Parameter function:			**MODBUS address: 4694**				
If P1-77 is reduced, the bandwidth of the DOB is lowered, slowing the convergence speed of the DOB observer and accelerating the speed drop. If P1-77 is increased, the bandwidth of the DOB is raised, accelerating the convergence speed of the DOB observer and slowing the speed drop (though not indefinitely), while potentially causing speed ripple.							

P1-78	*CTRL1_DobFilter*	Minimun value	0	Unit	Relevant operating mode		
		Factory setting	1	ms	P	V / Vz	T / Tz
		Maximum value	100		MS	S	–
Parameter function:			**MODBUS address: 4696**				
Adjust the compensation effect of Feedforward.							

Friction Compensation

Overview

In actual mechanical equipment, mechanical linkages typically involve frictional forces. During motor startup or near-stop conditions, static friction exerts a significant influence. Once the motor is running, sliding friction becomes the primary factor. While this friction can be compensated for through PI adjustment, it reduces the PI bandwidth.

Since static and sliding friction do not transition smoothly, motor startup or stopping may exhibit issues such as delayed response, premature shutdown, or oscillation.

In ultra-low-speed applications, the Strebick effect inherent in friction causes motor speed fluctuations, preventing precise command tracking. Therefore, a friction compensation algorithm is required to resolve this issue.

Friction Compensation Mode

Friction compensation employs model-based feedforward compensation. Consequently, the current for friction compensation maintains a fixed mathematical relationship with rotational speed.

The friction compensation function offers four operational modes:

- For general application scenarios, two friction compensation modes have been developed based on a friction model incorporating static friction and sliding friction.
  - Mode1: based on static friction + sliding friction + reference rotational speed
  - Mode2: based on static friction + sliding friction + feedback rotational speed

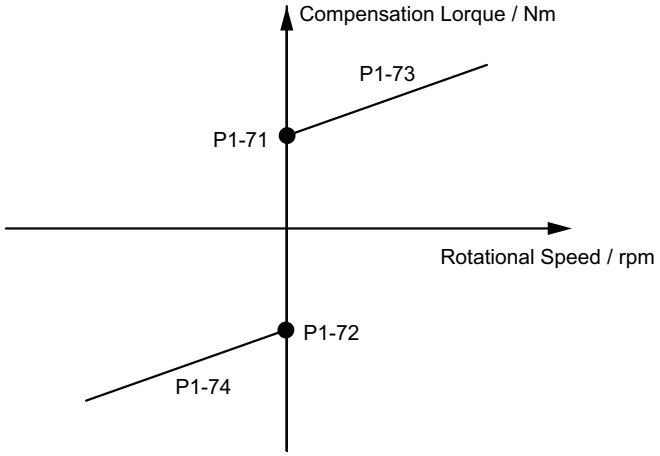

- For ultra-low-speed applications, two friction compensation modes were developed based on a simplified Strebick model.
  - Mode3: based on the simplified Strebick model + reference rotational speed
  - Mode4: bBased on the simplified Strebick model + feedback rotational speed

Related Parameter

The following parameter allows you to set the Friction Compensation function.

P1-70	*CTRL1_FricModeSelect*	Minimun value	0	Unit	Relevant operating mode		
		Factory setting	0	-	P	V / Vz	T / Tz
		Maximum value	4		MS	S	–
Parameter function:			**MODBUS address: 4680**				

Friction Compensation Function Activated:

- When Mode 1 is selected, friction force is calculated based on the reference speed and a static friction + sliding friction model.
- When Mode 2 is selected, friction force is calculated based on the actual speed and a static friction + sliding friction model.
- When Mode 3 is selected, friction force is calculated based on the reference speed and a simplified Strebick model.
- When Mode 4 is selected, friction force is calculated based on the actual speed and a simplified Strebick model.

P1-71	*CTRL1_FricPosStatic*	Minimun value	0	Unit	Relevant operating mode		
		Factory setting	0	%	P	V / Vz	T / Tz
		Maximum value	50		MS	S	–
Parameter function:			**MODBUS address: 4682**				

Positive Static Friction Compensation

P1-72	*CTRL1_FricNegStatic*	Minimun value	0	Unit	Relevant operating mode		
		Factory setting	0	%	P	V / Vz	T / Tz
		Maximum value	50		MS	S	–
Parameter function:			**MODBUS address: 4684**				

Negative Static Friction Compensation

P1-73	*CTRL1_FricBeta*	Minimun value	0	Unit	Relevant operating mode		
		Factory setting	0	%	P	V / Vz	T / Tz
		Maximum value	50		MS	S	–
Parameter function:			**MODBUS address: 4686**				

Slope of Linear Partial Friction Compensation

P1-74	*CTRL1_FricSpdThd*	Minimun value	0	Unit	Relevant operating mode		
		Factory setting	0	rpm	P	V / Vz	T / Tz
		Maximum value	1000		MS	S	–
Parameter function:			**MODBUS address: 4688**				

The inflection point position of the compensation model, where the inflection point corresponds to 60% of the static friction torque.

Carrier Frequency Switching

Overview

The carrier frequency in servo systems is a core parameter of PWM (Pulse Width Modulation) technology, directly impacting motor control performance, noise levels, and system efficiency.

Carrier frequency refers to the PWM switching frequency of power devices (such as IGBTs), denoting the number of switching operations completed per unit time (Hz).

Switching the carrier frequency aids in suppressing noise and optimizing harmonic performance.

Related Parameter

P4-39	Adaptive carrier switching current threshold	Minimum value	30	Unit	Related control mode		
		Factory setting	40	%	P	V/Vz	T/Tz
		Maximum value	60		MS	S	–

Parameter function: **MODBUS address: 4698**

Adaptive carrier switching current threshold

The parameter takes effect only when P4-36 is set to 1.

The parameter determines the amount of current for adaptive carrier switching: a percentage of the current motor rated current.

Setting can only be modified if power stage is disabled.

Modified settings become active the next time the motor is energized.

Adaptive Trajectory Guider

Overview

The Adaptive Trajectory Guider (ATG) employs feedforward control to enhance the responsiveness and tracking performance of servo drives, addressing the challenges posed by the discretization of control systems and inherent system delays.

The ATG calculates velocity feedforward, acceleration feedforward, and corresponding filter values based on position commands.

The block diagram of the control system incorporating the ATG algorithm is shown below:

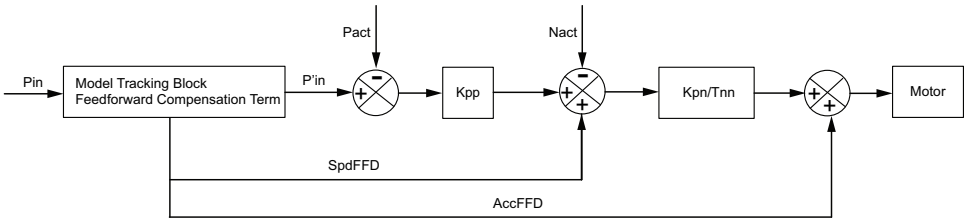

Related Parameter

The following parameter allows you to set the ATG.

P0-27	*RTATU_ATGEN*	Minimum value	0	Unit	Related control mode		
		Factory setting	0	–	P	V / Vz	T / Tz
		Maximum value	1		MS	S	–
Parameter function:			**MODBUS address: 5410**				
0 / Adaptive Trajectory Guider: Disable **1 / Adaptive Trajectory Guider**: Enable							

P1-53	*CTRL1_ATGGain*	Minimun value	100	Unit	Relevant operating mode		
		Factory setting	1000	1/s	P	V / Vz	T / Tz
		Maximum value	10000		MS	S	–
Parameter function:			**MODBUS address: 4642**				
Set ATG Second Filter Parameters							

P1-54	*CTRL1_ATGZeta*	Minimun value	500	Unit	Relevant operating mode		
		Factory setting	1000	%	P	V / Vz	T / Tz
		Maximum value	2000		MS	S	–
Parameter function:			**MODBUS address: 4644**				
Set ATG Second Filter Parameters							

Position Comparison

Overview

The servo position comparison function is one of the core features in a servo control system, primarily used to achieve high-precision position triggering and output control.

You can use one of the following four methods to monitor movement:

- The motor position is greater than or equal to the reference value A.
- The motor position is less than or equal to the reference value A.
- The motor position is within the range between reference value A and reference value B.
- The motor position is outside the range between reference value A and reference value B.

Monitoring can be performed using separate channels.

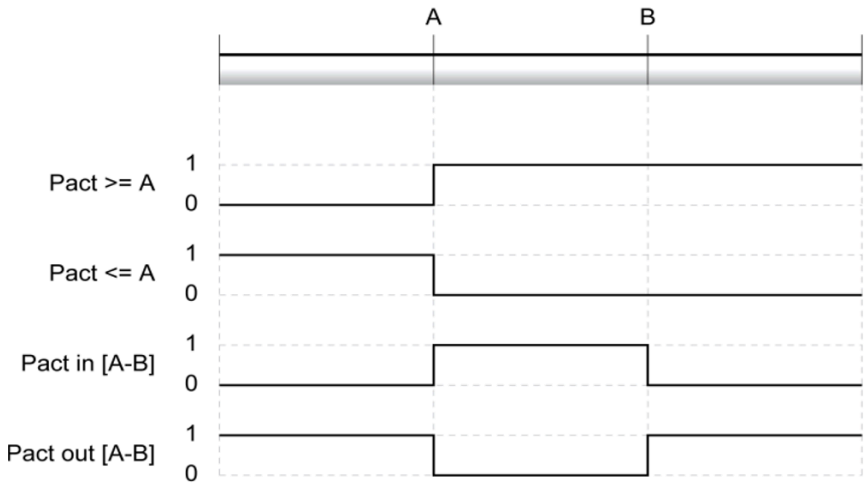

Related Parameter

–	*_PosRegStatus*	Minimum value	0	Unit	Related control mode		
		Factory setting	0	–	P	V / Vz	T / Tz
		Maximum value	65535		MS	S	–

Parameter function: **MODBUS address: 2818**

Signal status:

0: Comparison condition not met

1: Comparison condition met

Byte Bit Definitions:

Bit 0: Status of Position Register Channel 1

Bit 1: Status of Position Register Channel 2

Bit 2: Status of Position Register Channel 3

Bit 3: Status of Position Register Channel 4

–	*PosReg1Start*	Minimum value	0	Unit	Related control mode		
		Factory setting	0	–	P	V / Vz	T / Tz
		Maximum value	3		MS	S	–

Parameter function: **MODBUS address: 2820**

0 / Off (Hold Last State): Location register channel 1 is off, and the status bit holds the last state.

1 / On: Location register channel 1 is on.

2 / Off (Set State 0): Location register channel 1 is off, and the status bit is set to 0.

3 / Off (Set State 1): Location register channel 1 is off, and the status bit is set to 1.

Modified settings become active immediately.

–	*PosReg2Start*	Minimum value	0	Unit	Related control mode		
		Factory setting	0	–	P	V / Vz	T / Tz
		Maximum value	3		MS	S	–

Parameter function: **MODBUS address: 2822**

0 / Off (Hold Last State): Location register channel 2 is off, and the status bit holds the last state.

1 / On: Location register channel 2 is on.

2 / Off (Set State 0): Location register channel 2 is off, and the status bit is set to 0.

3 / Off (Set State 1): Location register channel 2 is off, and the status bit is set to 1.

Modified settings become active immediately.

–	*PosReg3Start*	Minimum value	0	Unit	Related control mode		
		Factory setting	0	–	P	V / Vz	T / Tz
		Maximum value	3		MS	S	–

Parameter function: **MODBUS address: 2840**

0 / Off (Hold Last State): Location register channel 3 is off, and the status bit holds the last state.

1 / On: Location register channel 3 is on.

2 / Off (Set State 0): Location register channel 3 is off, and the status bit is set to 0.

3 / Off (Set State 1): Location register channel 3 is off, and the status bit is set to 1.

Modified settings become active immediately.

–	*PosReg4Start*	Minimum value	0	Unit	Related control mode		
		Factory setting	0	–	P	V / Vz	T / Tz
		Maximum value	3		MS	S	–

Parameter function: **MODBUS address: 2842**

0 / Off (Hold Last State): Location register channel 4 is off, and the status bit holds the last state.

1 / On: Location register channel 4 is on.

2 / Off (Set State 0): Location register channel 4 is off, and the status bit is set to 0.

3 / Off (Set State 1): Location register channel 4 is off, and the status bit is set to 1.

Modified settings become active immediately.

P5-42	*PosReg1Mode*	Minimum value	0	Unit	Related control mode		
		Factory setting	0	–	P	V / Vz	T / Tz
		Maximum value	5		MS	S	–

Parameter function: **MODBUS address: 2824**

0 / Greater than or equal to A: The actual position of position register channel 1 is greater than or equal to comparison value A.

1 / Less than or equal to A: The actual position of position register channel 1 is less than or equal to comparison value A.

2 / Within [A-B] range (Basic): Actual position falls within the A-B range, including limits (Basic).

3 / [A-B] Out of Range (Basic): Actual position exceeds range A-B, excluding limits (Basic).

4 / [A-B] Within Range (Extended): Actual position within range A-B, including limits (Extended).

5 / [A-B] Out of Range (Extended): Actual position exceeds range A-B, excluding limits (Extended).

Modified settings become active immediately.

P5-43	*PosReg1ValueA*	Minimum value	-2147483648	Unit	Related control mode		
		Factory setting	0	usr_p	P	V / Vz	T / Tz
		Maximum value	2147483647		MS	S	–
Parameter function:			MODBUS address: 2832				
Comparison value A for location register channel 1							

P5-44	*PosReg1ValueB*	Minimum value	-2147483648	Unit	Related control mode		
		Factory setting	0	usr_p	P	V / Vz	T / Tz
		Maximum value	2147483647		MS	S	–
Parameter function:			MODBUS address: 2834				
Comparison value B for location register channel 1							

P5-46	*PosReg2Mode*	Minimum value	0	Unit	Related control mode		
		Factory setting	0	–	P	V / Vz	T / Tz
		Maximum value	5		MS	S	–
Parameter function:			MODBUS address: 2826				

0 / Greater than or equal to A: The actual position of position register channel 2 is greater than or equal to comparison value A.

1 / Less than or equal to A: The actual position of position register channel 2 is less than or equal to comparison value A.

2 / Within [A-B] range (Basic): Actual position falls within the A-B range, including limits (Basic).

3 / [A-B] Out of Range (Basic): Actual position exceeds range A-B, excluding limits (Basic).

4 / [A-B] Within Range (Extended): Actual position within range A-B, including limits (Extended).

5 / [A-B] Out of Range (Extended): Actual position exceeds range A-B, excluding limits (Extended).

Modified settings become active immediately.

P5-47	*PosReg2ValueA*	Minimum value	-2147483648	Unit	Related control mode		
		Factory setting	0	usr_p	P	V / Vz	T / Tz
		Maximum value	2147483647		MS	S	–
Parameter function:			MODBUS address: 2836				
Comparison value A for location register channel 2							

P5-48	*PosReg2ValueB*	Minimum value	-2147483648	Unit	Related control mode		
		Factory setting	0	usr_p	P	V / Vz	T / Tz
		Maximum value	2147483647		MS	S	–
Parameter function:			MODBUS address: 2838				
Comparison value B for location register channel 2							

P5-50	*PosReg3Mode*	Minimum value	0	Unit	Related control mode		
		Factory setting	0	–	P	V / Vz	T / Tz
		Maximum value	5		MS	S	–

Parameter function: **MODBUS address: 2844**

0 / Greater than or equal to A: The actual position of position register channel 3 is greater than or equal to comparison value A.

1 / Less than or equal to A: The actual position of position register channel 3 is less than or equal to comparison value A.

2 / Within [A-B] range (Basic): Actual position falls within the A-B range, including limits (Basic).

3 / [A-B] Out of Range (Basic): Actual position exceeds range A-B, excluding limits (Basic).

4 / [A-B] Within Range (Extended): Actual position within range A-B, including limits (Extended).

5 / [A-B] Out of Range (Extended): Actual position exceeds range A-B, excluding limits (Extended).

Modified settings become active immediately.

P5-51	*PosReg3ValueA*	Minimum value	-2147483648	Unit	Related control mode		
		Factory setting	0	usr_p	P	V / Vz	T / Tz
		Maximum value	2147483647		MS	S	–

Parameter function: **MODBUS address: 2852**

Comparison value A for location register channel 3

P5-52	*PosReg3ValueB*	Minimum value	-2147483648	Unit	Related control mode		
		Factory setting	0	usr_p	P	V / Vz	T / Tz
		Maximum value	2147483647		MS	S	–

Parameter function: **MODBUS address: 2854**

Comparison value B for location register channel 3

P5-54	*PosReg4Mode*	Minimum value	0	Unit	Related control mode		
		Factory setting	0	–	P	V / Vz	T / Tz
		Maximum value	5		MS	S	–

Parameter function: **MODBUS address: 2846**

0 / Greater than or equal to A: The actual position of position register channel 4 is greater than or equal to comparison value A.

1 / Less than or equal to A: The actual position of position register channel 4 is less than or equal to comparison value A.

2 / Within [A-B] range (Basic): Actual position falls within the A-B range, including limits (Basic).

3 / [A-B] Out of Range (Basic): Actual position exceeds range A-B, excluding limits (Basic).

4 / [A-B] Within Range (Extended): Actual position within range A-B, including limits (Extended).

5 / [A-B] Out of Range (Extended): Actual position exceeds range A-B, excluding limits (Extended).

Modified settings become active immediately.

P5-55	*PosReg4ValueA*	Minimum value	0	Unit	Related control mode		
		Factory setting	0	–	P	V / Vz	T / Tz
		Maximum value	5		MS	S	–

Parameter function: **MODBUS address: 2844**

Location Register Channel 3 Comparison Standard Selection

P5-56	*PosReg4ValueB*	Minimum value	0	Unit	Related control mode		
		Factory setting	0	–	P	V / Vz	T / Tz
		Maximum value	5		MS	S	–
Parameter function:			**MODBUS address: 2846**				
Location Register Channel 4 Comparison Standard Selection							

P5-57	*PosRegGroupStart*	Minimum value	0	Unit	Related control mode		
		Factory setting	0	–	P	V / Vz	T / Tz
		Maximum value	15		MS	S	–
Parameter function:			**MODBUS address: 2860**				

0 / No Channel: No channel activated

1 / Channel 1: Channel 1 activated

2 / Channel 2: Channel 2 activated

3 / Channels 1 and 2: Channels 1 and 2 activated

4 / Channel 3: Channel 3 activated

5 / Channels 1 and 3: Channels 1 and 3 activated

6 / Channels 2 and 3: Channels 2 and 3 activated

7 / Channels 1, 2, and 3: Channels 1, 2, and 3 activated

8 / Channel 4: Channel 4 activated

9 / Channel 1 and 4: Channels 1 and 4 activated

10 / Channel 2 and 4: Channels 2 and 4 activated

11 / Channel 1, 2, and 4: Channels 1, 2, and 4 activated

12 / Channel 3 and 4: Channels 3 and 4 activated

13 / Channels 1, 3, and 4: Channels 1, 3, and 4 activated

14 / Channels 2, 3, and 4: Channels 2, 3, and 4 activated

15 / Channels 1, 2, 3, and 4: Channels 1, 2, 3, and 4 activated

Modified settings become active immediately.

Tuning

Types and Basic Procedure of Tuning

Tuning

The purpose of tuning (adjustment) is to optimize the function of servo responsiveness. The servo responsiveness depends on the control loop gain set in the servo drive. Higher servo responsiveness allows the motor to move as close to the command as possible, reducing various errors and delays.

The control loop gain is set by a combination of parameters (position loop gain, velocity loop gain, feed-forward gain, various filters, inertia ratio settings, etc.) and affects the performance of the servo. The setting of control loop gain of the servo should also take into account the fit and balance between the parameters.

In general, machinery with high rigidity can set relatively high servo gain to improve responsiveness. However, for machinery with low rigidity, relatively high servo gain may lead to vibration instead, thus failing to improve responsiveness. In this case, you can consider using various vibration suppression functions of the servo to inhibit vibration.

Type of Tuning

The default control loop gain set for the servo at the factory is mainly stable, but the user can set the control loop gain in the following ways to further improve the responsiveness according to the actual machine condition.

Type of Tuning	Outline	Operation tool	
		Drive panel	Commission-ing software
Easy Tuning	Drive the motor on a preset motion profile, and measure and set the control loop parameters while the motor is running.	√	√
Comfort Tuning	The motion profile parameters can be set. The motor can be driven according to the profile that better meets the actual needs, and the control loop parameters can be measured and set while the motor is running.	×	√
Adaptive control	Input motion command from the host computer or drive the motor motion by test run. The servo drive automatically presumes the load inertia ratio while moving, and set the control loop parameters by combining the rigidity parameters.	√	√
Adaptive Notch Filter	The servo drive automatically measures and sets notch filters (up to 2 sets) for suppressing mechanical resonance.	√	√
Manual gain adjustment	Manually set the control loop gain and various filters.	△	√

√: Available

×: Unavailable

△: Limited function

The type of control loops varies from different types of tuning, as shown in the following table:

Control loop type	Serial control loop mode	Adaptive control loop mode		
Mode selection	P0-01= 0 - Invalid	P0-01= 1 - Standard:	P0-01= 2 - Passive:	P0-01= 3 - Active
Control loop parameter tuning method	Easy Tuning (Drive HMI / SoMove)	Online measurement of the system's inertia ratio P0-03	Manual setting of the system's inertia ratio P0-03	Online measurement of the system's inertia ratio P0-03
	Comfort Tuning (SoMove)	Manual setting of the stiffness level P0-02	Manual setting of the rigid grade P0-02	Try to find the best stiffness level (up to 4 times increased) P0-02
	Manual gain adjustment (Drive HMI / SoMove)	-	-	-
Parameters	The Ctrl1 control loop parameter set 1 is used by default	The load type parameter P0-04 determines the default initial stiffness level		
	The input point function can be used to switch between control loop parameter sets 1 and 2.	Equivalent mapping to control loop parameter sets 1 and 3 can be achieved via the SoMove software.		
	The speed loop feed-forward parameter P1-03 is valid.			
Transition of control loop parameters	The control loop parameter set 3 is used for low gains.	The parameter P1-47 is used for low stiffness levels		
	Switching conditions for parameters: P1-39...P1-45	Switching conditions for parameters: P1-39...P1-45		
Details	Easy Tuning, page 306 / Comfort Tuning, page 307	Adaptive control, page 307		

Basic Procedure for Tuning

The following diagram shows the flow chart of the basic procedure for tuning. Make appropriate adjustments according to the actual conditions of the machine and the operating conditions.

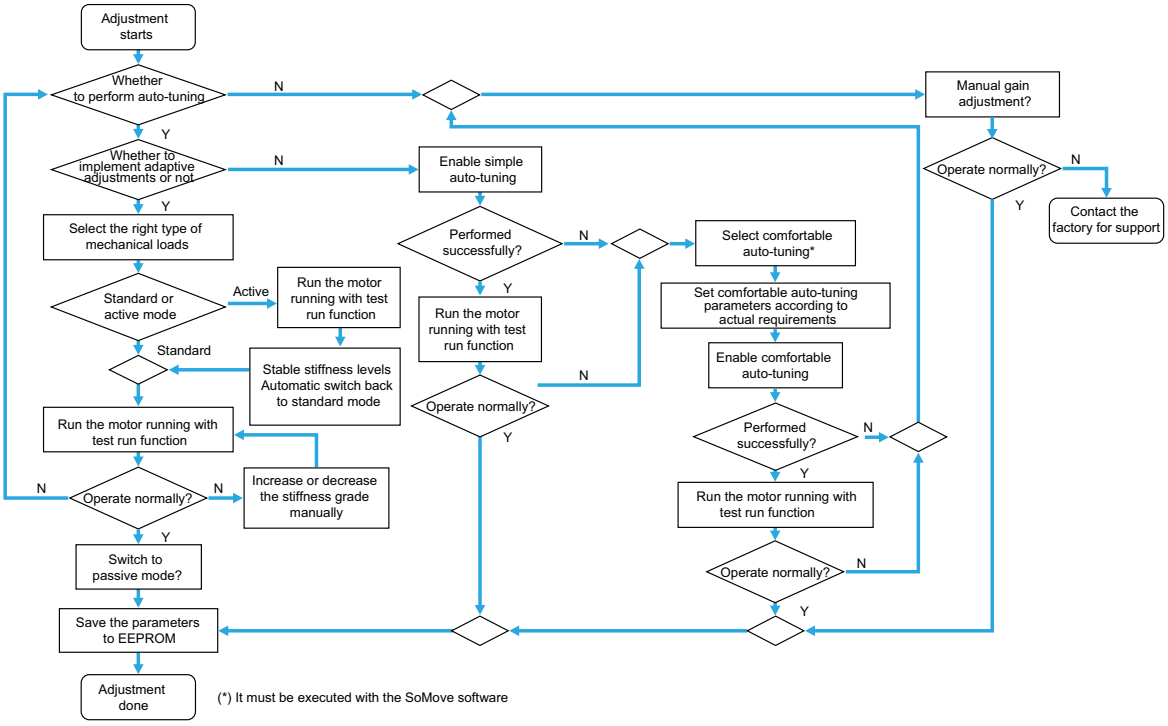

Safety Precautions for Tuning

⚠WARNING

UNINTENDED MOVEMENT

- Do not touch the rotating part of the motor when the servo is ON or the motor is rotating.
- When the servo motor is running, keep it in a state where it can be stopped in an emergency at any time.
- Ensure that the test run is completed properly before making adjustments.
- To ensure safety, mount a stop device on the mechanical side.

Failure to follow these instructions can result in death, serious injury, or equipment damage.

Observe the following safety precautions when performing the tuning:

- Set the limit function so that when either positive or negative limit is triggered, the Quick Stop function is triggered and the motion stops. Refer to Setting the Limit Switches, page 172 for details.
- Set the alarm for excessive follow error. Refer to Monitoring Position Following Status, page 203 for details.
- Note that there are no obstacles within the travel range of the auto-tuning operation.

Selecting the Control Loop Parameter Model

The Lexium18 servo drive supports two types of control loop models, the serial PID model andadaptive control model.

When the parameter P0-01 is set to “0/ Invalid”, the servo drive uses the PID control loop model.

There are three control loop parameter sets for the Lexium 18 servo drive:

- P1-00...P1-06: Control loop parameter set 1.
- P1-07...P1-13: Control loop parameter set 2.
- P1-14...P1-18: Control loop parameter set 3.

CTRL1 / Control loop parameter set 1		CTRL2 / Control loop parameter set 2		CTRL3 / Control loop parameter set 3	
P1-00	Position controller P gain.	P1-07	Position controller P gain.	P1-14	Position controller P gain.
P1-01	Velocity controller P gain.	P1-08	Velocity controller P gain.	P1-15	Velocity controller P gain.
P1-02	Velocity controller integral action time.	P1-09	Velocity controller integral action time.	P1-16	Velocity controller integral action time.
P1-03	Velocity feed-forward control.	P1-10	Velocity feed-forward control.	P1-17	Time constant of velocity loop command filtering
P1-04	Time constant of velocity loop command filtering	P1-11	Time constant of velocity loop command filtering	P1-18	Time constant of current loop command filtering
P1-05	Time constant of current loop command filtering	P1-12	Time constant of current loop command filtering	–	–
P1-06	Friction compensation gain	P1-13	Friction compensation gain	–	–
P2-07	Control parameter set 1: Notch filter 1: Damping	P2-15	Control parameter set 2: Notch filter 1: Damping.	–	–
P2-08	Control parameter set 1: Notch filter 1: Frequency	P2-16	Control parameter set 2: Notch filter 1: Frequency.	–	–
P2-09	Control parameter set 1: Notch filter 1: Bandwidth	P2-17	Control parameter set 2: Notch filter 1: Bandwidth.	–	–
P2-10	Control parameter set 1: Notch filter 2: Damping.	P2-18	Control parameter set 2: Notch filter 2: Damping	–	–
P2-11	Control parameter set 1: Notch filter 2: Frequency.	P2-19	Control parameter set 2: Notch filter 2: Frequency	–	–
P2-12	Control parameter set 1: Notch filter 2: Bandwidth.	P2-20	Control parameter set 2: Notch filter 2: Bandwidth	–	–
P2-13	Control parameter set 1: overshoot suppression filter: Damping	P2-21	Control parameter set 2: overshoot suppression filter: Damping	–	–
P2-14	Control parameter set 1: Delay of overshoot suppression filters	P2-22	Control parameter set 2: Delay of overshoot suppression filters	–	–

The servo drive uses an adaptive control loop model when the parameter P0-01 is set to “1/Standard”, “2/Passive” or “3/Adaptive”.

Lexium18 servo drive has 2 adaptive control stiffness levels:

- P0-02: Adaptive control stiffness level.
- P1-47: Adaptive stiffness switching: Target low stiffness.

Easy Tuning

Overview

Easy Tuning drives the motor along the preset motion trajectory, and measures and sets the control loop parameters during operation. Easy Tuning determines the frictional resistance as a constantly acting load and considers it in the calculation of the inertia ratio of the entire system. Autotuning will take into account all external factors, for example the motor load, and measure an optimal control loop parameter on this basis. Easy Tuning function also supports vertical axes.

Easy Tuning function sets the parameters of P1-00...P1-06 (CTRL1) and P1-14... P1-18(CTRL3) in the “P1-Gain Setting” parameter set.

NOTE: When performing Easy Tuning, the servo motor will move. Incorrect parameters may cause unintended movements or the loss of monitoring functions. With the adjustment of control loop parameters, the system may produce noise or mechanical oscillations. Noise development and mechanical oscillations of the system are normal.

⚠WARNING

UNINTENDED MOVEMENT

- Start the system only if there is no person or obstruction in the zone of operation.
- Consider the travel of deceleration ramp during emergency stop.
- Verify that the parameter settings for a Quick Stop are correct
- Verify correct operation of the limit switches
- Verify that a functioning emergency stop push-button is within reach of all persons involved in all phases of machine operation.

Failure to follow these instructions can result in death, serious injury, or equipment damage.

Operation method

If you want to perform Easy Tuning, the parameter P0-01=0 needs to be adjusted.

There are two ways of starting Easy Tuning:

- Start via the HMI front panel integrated with the device: **HMI > OP > tun > tuSt**.

  Refer to Easy Tuning, page 306 for details.
- Start via SoMove of the commissioning software: **SoMove > Parameter Tuning > Easy Tuning > Start**.

  The tuning process is displayed by the progress bar. When the tuning is completed, please use the SoMove software function to save the control loop parameters to the drive EEPROM.

Comfort Tuning

Overview

The motion trajectory parameters of Comfort Tuning can be set, so that the parameters such as velocity, direction, distance and mechanical connection type of Autotuning can better adapt to the actual applications, and more accurate control loop parameters can be obtained. Comfort Tuning determines the frictional resistance as a constantly acting load and considers it in the calculation of the inertia ratio of the entire system. Autotuning will take into account all external factors, for example the motor load, and measure an optimal control loop parameter on this basis. Comfort Tuning function also supports vertical axes.

Comfort Tuning function sets the parameters of P1-00...P1-06 (CTRL1) and P1-14...P1-18 (CTRL3) in the “P1-gain setting” parameter set.

Note: When performing Comfort Tuning, the servo motor will move. Incorrect parameters may cause unintended movements or the loss of monitoring functions. With the adjustment of control loop parameters, the system may produce noise or mechanical oscillations. Noise development and mechanical oscillations of the system are normal.

⚠ WARNING

UNINTENDED MOVEMENT

- Start the system only if there is no person or obstruction in the zone of operation.
- Consider the travel of deceleration ramp during emergency stop.
- Verify that the parameter settings for a Quick Stop are correct
- Verify correct operation of the limit switches
- Verify that a functioning emergency stop push-button is within reach of all persons involved in all phases of machine operation.

Failure to follow these instructions can result in death, serious injury, or equipment damage.

Operation method

If you want to perform Comfort Tuning, the parameter P0-01=0 needs to be adjusted.

Comfort Tuning must be operated via SoMove software: **SoMove > Parameter Tuning > Comfort Tuning > Set Comfort Tuning Parameters > Start**.

The tuning process is displayed by the progress bar. When the tuning is completed, please use the SoMove software function to save the control loop parameters to the drive EEPROM.

Adaptive control

Overview

Adaptive Control will calculate the load characteristics of the system in real time according to the actual operating characteristics of the system and automatically set the appropriate control loop parameters according to the stiffness level.

Optimize the default parameters, which are consistent with the default adaptive mode.

Code	ShortLabel	Curret Value
P1-00	CTRL1_KPp	65 1/s
P1-01	CTRL1_KPn	0.042 A/(1/min)
P1-02	CTRL1_TNn	16 ms
P1-03	CTRL1_KFPp	55%
P1-04	CTRL1_TAUnref	0 ms
P1-05	CTRL1_TAUiref	0.25 ms
P1-06	CTRL1_Kfric	0 Arms
P1-07	CTRL2_KPp	65 1/s
P1-08	CTRL2_KPn	0.042 A/(1/min)
P1-09	CTRL2_TNn	16 ms
P1-10	CTRL2_KFPp	55%
P1-11	CTRL2_TAUnref	0 ms
P1-12	CTRL2_TAUiref	0.25 ms
P1-13	CTRL2_Kfric	0 Arms
P1-14	CTRL3_KPp	20 1/s
P1-15	CTRL3_KPn	0.0168 A/(1/min)
P1-16	CTRL3_TNn	40 ms
P1-17	CTRL3_TAUnref	0 ms
P1-18	CTRL3_TAUiref	0.1 ms
P1-19	RTATU_TnnUser2FRC	50 ms
P1-26	GEARjerklim	PosSyncOn
P1-27	RAMP_v_jerk	0 ms
P1-28	CTRL_TAUpref	0 ms
P1-29	CTRL_SPDMOVEAVG	0 ms
P1-30	CTRL_SpdFric	5 1/min
P1-31	CTRL_TAUnact	0.1 ms
P1-39	CTRL_DYNGNSWSET	Dynamic Stiffness Switching Disable

Default control mode: Passive adaptive mode

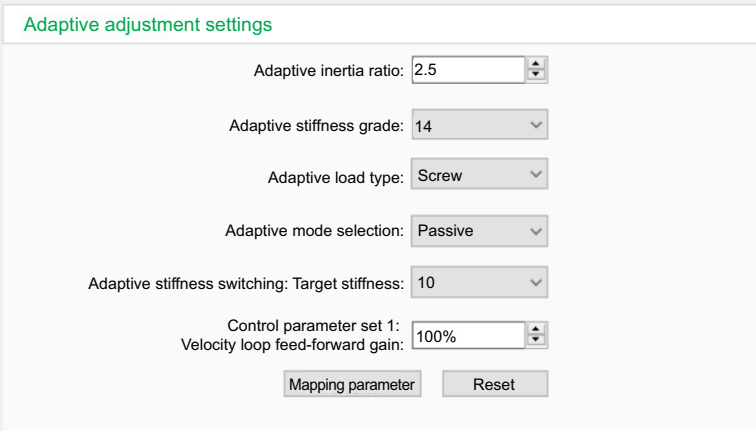

3 adaptive control modes are optional via the parameter P0-01, including:

- P0-01= 1/Standard adaptive control mode
- P0-01= 2/Passive adaptive control mode
- P0-01= 3/Active adaptive control mode

Adaptive control does not drive the servo motor. Once the adaptive control function is enabled, it will continuously monitor the operating characteristics of the load system, such as velocity and acceleration. The motion command can come from either the host computer controller or the motion driven by a test run. For test run, refer to the JOG, page 181section.

Depending on the selected adaptive control mode as per the parameter P0-01, the adaptive control can actively measure the load inertia ratio or passively accept it input by the user. It can also actively set the appropriate stiffness levels (up to 4 levels) or passively accept the user's selected stiffness levels.

NOTE: During the execution of adaptive control, it is possible for fluctuations in actual load conditions to lead to the measurement of an incorrect result. Incorrect parameters may cause unintended movements or the loss of monitoring functions. With the adjustment of control loop parameters, the system may produce noise or mechanical oscillations. Noise development and mechanical oscillations of the system are normal.

⚠ WARNING

UNINTENDED MOVEMENT

- Start the system only if there is no person or obstruction in the zone of operation.
- Consider the travel of deceleration ramp during emergency stop.
- Verify that the parameter settings for a Quick Stop are correct
- Verify correct operation of the limit switches
- Verify that a functioning emergency stop push-button is within reach of all persons involved in all phases of machine operation.

Failure to follow these instructions can result in death, serious injury, or equipment damage.

Different stiffness levels represent different levels of servo system response. As the stiffness level becomes higher, the servo system response and the servo stiffness will be higher. However, vibrations are likely to occur. When setting the stiffness, change the set value from low to high.

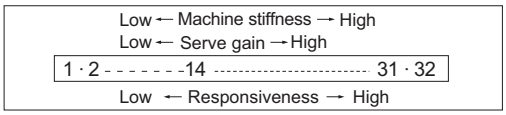

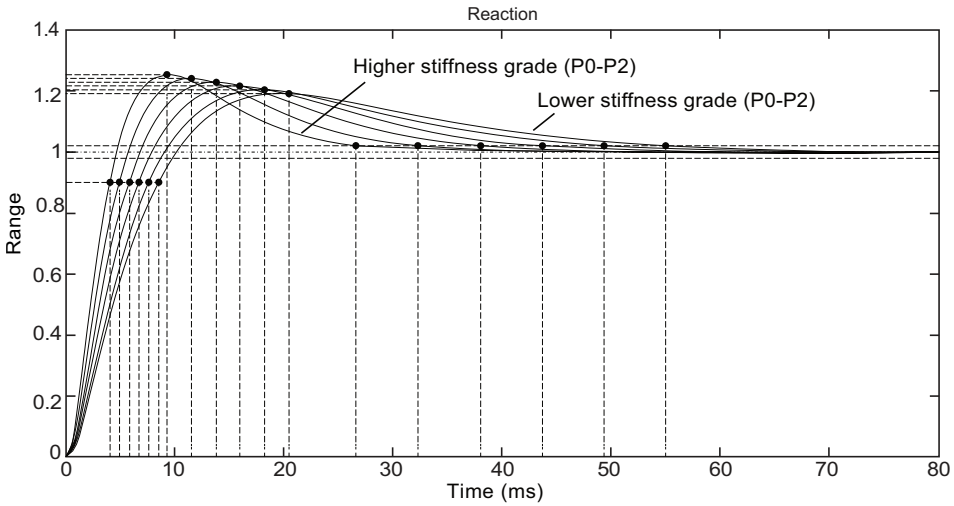

Service conditions

In order to ensure the accuracy of adaptive control measurement, the motion under adaptive control must meet certain conditions.

Pay special attention when facing the following application conditions:

- Load-to-motor inertia ratio is too large (more than 30 times)
- Mechanical stiffness is extremely low
- Large backlash
- Motion velocity is less than 100 rpm
- Acceleration and deceleration of motion are less than 2000 rpm/s

Under any of the above circumstances, change the load conditions, increase the movement velocity and acceleration, or use manual gain adjustment.

NOTE: For the motors with adaptive power less than 200W, it is recommended that the movement velocity be greater than 200 rpm and the acceleration be greater than 20000 rpm if conditions permit so as to increase the accuracy of inertia identification.

Standard adaptive control mode

Enable the standard adaptive control mode by setting the parameter P0-01 to “1/ Standard”. In this mode, the servo drive automatically measures the system load-to-motor inertia ratio and the system stiffness level is set manually.

Start via the HMI front panel integrated with the device:

- Start via the HMI front panel integrated with the device:
  1. Select the appropriate mechanical load type via the parameter P0-04 according to actual load type.

     Default values of four typical loads and stiffness levels:

     0 / Direct Coupling: 18

     1 / Ball Screw**: 14;**

     2 / Belt: 10;

     3 / Large Inertia: 6.
  2. Set the parameter P0-01 to 1.
  3. The host computer controller sends a motion command to drive the motor, or the HMI test run function is used to drive the motor.
     a. After the motor starts and stops several times, increase or decrease the “System Stiffness Level” appropriately via the parameter P0-02 according to the operating state of the system, and drive the motor again.
     b. If the operating state of the system can meet the requirements, set the parameter P0-01 to 2, and disable the automatic measurement of the system load inertia ratio to prevent measuring an incorrect result due to the fluctuation in actual load conditions.
     c. Under such circumstance, the load inertia ratio can be further fine-tuned via the parameter P0-03 according to the system operating state, so that the servo system will have a better response and stability.

- Start via the SoMove software:
  1. Enter the interface **Parameter Tuning> > Automatic Adaptive Adjustment**.
  2. Select the “Adaptive Control Load Type” (P0-04) according to actual load type.
  3. Select “Standard” in “Adaptive Control Mode Selection.
  4. The motor is driven by the motion command issued from the host computer controller, or via the control panel with SoMove automatic adaptive control.
  5. After the motor starts and stops several times, increase or decrease the “Adaptive Control stiffness Level” appropriately according to the operating state of the system, and drive the motor again.
  6. If the operating state of the system can meet the requirements, select “Passive” in the “Adaptive Mode Selection”, and disable the automatic measurement of the system load inertia ratio to prevent measuring an incorrect result due to the fluctuation in the actual load conditions.
  7. Under such circumstance, the value of “Adaptive Inertia Ratio” can be further fine-tuned according to the operating state of the system, so that the servo system will have a better response and stability.

Passive adaptive control mode

Enable the active passive control mode by setting the parameter P0-01 to “2/ Passive”. In this mode, you need to manually set the load-to-motor inertia ratio and stiffness level of the system.

There are two ways of starting passive adaptive control:

- Start via the HMI front panel integrated with the device:
  1. Select the appropriate mechanical load type via the parameter P0-04 according to actual load type.
  2. Set the parameter P0-01 to 2.
  3. Set the system stiffness level via the parameter P0-02 the system load-to-motor inertia ratio via the parameter P0-03
  4. The host computer controller sends a motion command to drive the motor, or the HMI test run function integrated by the drive is used to drive the motor.
  5. Further fine-tune the parameter P0-02 and P0-03 according to the operating state of the system so that the servo system will have a better response and stability.
- Start via the SoMove software:
  1. Enter the interface **Parameter Tuning> > Automatic Adaptive Adjustment**.
  2. Select the “Adaptive Control Load Type” (P0-04) according to actual load type.
  3. Select “Passive” in the “Adaptive Control Mode Selection”.
  4. Set the values in “Adaptive Control Stiffness Level” and “Adaptive Inertia Ratio”.
  5. The motor is driven by the motion command issued from the host computer controller, or via the control panel with SoMove automatic adaptive control.
  6. Under such circumstance, the values of “Adaptive Control Stiffness Level” and “Adaptive Inertia Ratio” can be further fine-tuned according to the operating state of the system, so that the servo system will have a better response and stability.

Active Adaptive Control Mode

Enable the active adaptive control mode by setting the parameter P0-01 to “3/ Adaptive”. In this mode, the servo drive automatically measures the system load-to-motor inertia ratio and tries to automatically set the optimal system stiffness level (up to 4 times).

There are two ways of starting active adaptive control:

- Start via the HMI front panel integrated with the device:
  1. Select the appropriate mechanical load type via the parameter P0-04 according to actual load type.
  2. Set the parameter P0-01 to 3.
  3. Open the parameter P0-02 and observe the system stiffness level.
  4. The host computer controller sends a motion command to drive the motor, or the HMI test run function is used to drive the motor.
  5. After the motor starts and stops several times, observe the change of the parameter P0-02. Active adaptive control will try to gradually increase the system stiffness level according to the system operating state, and find out the most suitable system stiffness level. After finding out the most suitable system stiffness level, the parameter P0-01 will be set to “1/ Standard”. Active adaptive control increases the system stiffness by up to 4 levels.
  6. If the operating state of the system can meet the requirements, set the parameter P0-01 to 2, and disable the automatic measurement of the system load inertia ratio to prevent measuring an incorrect result due to the fluctuation in actual load conditions.
  7. Under such circumstance, the load inertia ratio can be further fine-tuned via the parameter P0-03 according to the system operating state, so that the servo system will have a better response and stability.
- Start via the SoMove software:
  1. Enter the interface **Parameter Tuning> > Automatic Adaptive Adjustment**.
  2. Select the “Adaptive Control Load Type” (P0-04) according to actual load type.
  3. Select “Adaptive” in the “Adaptive Control Mode Selection”.
  4. The motor is driven by the motion command issued from the host computer controller, or via the control panel with SoMove automatic adaptive control.
  5. After the motor starts and stops several times, observe the changes of the values in “Adaptive Control Stiffness Level” and “Adaptive Inertia Ratio”. Active adaptive control will try to gradually increase the system stiffness level according to the system operating state, and find out the most suitable system stiffness level. After finding out the most suitable system stiffness level, “Adaptive Control Mode Selection” will be set to “Standard”. Active adaptive control increases the system stiffness by up to 4 levels.
  6. If the operating state of the system can meet the requirements, select “Passive” in the “Adaptive Mode Selection”, and disable the automatic measurement of the system load inertia ratio to prevent measuring an incorrect result due to the fluctuation in the actual load conditions.
  7. Under such circumstance, the value of “Adaptive Inertia Ratio” can be further fine-tuned according to the operating state of the system, so that the servo system will have a better response and stability.

Adaptive Trajectory Tracking Control Algorithm Mode

Overview

Adaptive Trajectory Tracking (ATT) algorithm features both usability and high performance.

- Usability
  - Features one-touch self-tuning functionality. It can automatically tune inertia, filters, and control parameters.
  - After tuning, the waveform is smooth with no overshoot.
  - Single-parameter system rigidity automatic adjustment.
- High performance
  - Advanced position and velocity loop compensation algorithms help reduce positional errors during motion and enhance trajectory tracking performance.
  - Dedicated position-motion finishing parameters facilitate accelerated finishing without compromising rigidity, significantly reducing settling time and enhancing equipment performance.

Core Parameters of the ATT Algorithm

ATT Core Functionality Mode (ATT Lite)

Mode selection parameter

P0-01	Adaptive mode selection	Minimum value	0	Unit	Related control mode		
		Factory setting	2	–	P	V / Vz	T / Tz
		Maximum value	8		MS	S	–

Parameter function:	MODBUS address: 5386

Adaptive mode selection

0 / Invalid: The adaptive operating mode is invalid and the serial PID control loop parameters via the parameter set P1 are used.

1 / Standard: In the standard adaptive operating mode, the servo drive automatically measures the system inertia ratio, the stiffness level is set manually, and adaptive control loop parameters are used.

2 / Passive: In the passive adaptive operating mode, the system inertia ratio and the stiffness level are set manually, and adaptive control loop parameters are used.

3 / Adaptive: In the active adaptive operating mode, the servo drive automatically measures the system inertia ratio, and tries to automatically set the best stiffness level (increase up to 4 stiffness levels); adaptive control loop parameters are used.

4 / Reset: Reset commissioning parameters.

6 / ATT: Enable ATT algorithm full-feature mode.

7 / ATT Lite: Enable the core functional mode of the ATT algorithm.

Modified settings become active immediately.

ATT Lite core parameter

- One-click self-tuning parameters:

P6-50	RTATU_ATTAUTOTUNNINGITEM	Minimum value	0	Unit	Related control mode		
		Factory setting	0	–	P	V / Vz	T / Tz
		Maximum value	1300		MS	S	–

Parameter function: **MODBUS address: 5402**

Tuning item content:

10: Offline tuning for all items

20: Offline inertia measurement

40: Offline jerk tuning

One-click self-tuning project selection method:

X	Thousands	Hundreds	Tens	Ones	Description
	(Offline/ Online)	(Direction)	(Project)	(Acceleration Intensity/Current Project)	
X	0	0	A	B/X	Forward/Reverse offline self-tuning selected project A
X	0	1	A	B/X	Forward offline self-tuning selected project A
X	0	2	A	B/X	Reverse offline self-tuning selected project A
X	1	X	X	X	Reserved

Value of A:
- 0: TUNE_NONE = 0
- 1: TUNE_ALL = 1, tune all projects
- 2: TUNE_INERTIA = 2, measure inertia
- 3: TUNE_FR = 3, automatically select FR based on inertia
- 4: TUNE_JERK = 4, tune jerk value based on system maximum acceleration and highest velocity

Value of B (The acceleration selected for this value only takes effect during tuning inertia):
- 0: Acceleration/Deceleration P4-02/P4-03 = 250000 usr_a
- 1: Acceleration/Deceleration P4-02/P4-03 = 200000 usr_a
- 2: Acceleration/Deceleration P4-02/P4-03 = 150000 usr_a
- 3: Acceleration/Deceleration P4-02/P4-03 = 100000 usr_a
- 4: Acceleration/Deceleration P4-02/P4-03 = 50000 usr_a
- ≥5: Acceleration/Deceleration P4-02/P4-03 = 25000 usr_a

Notes

1. After offline tuning is complete, the servo returns to the RDY state.
2. TUNE_JERK=4, during offline jerk tuning, the servo will perform four forward and reverse cycles at the speed set in P6-53 and the relative position set in P6-52, following the acceleration and deceleration values specified in P4-02 and P4-03.
3. When parameter P6-50 is written to 0, the current tuning process can be stopped.
4. During ATT auto-tuning, range protection is automatically enabled.
   - During forward/reverse operation, if the movement range exceeds 20% of the position value set in P6-52, error E1B12 is reported and the servo stops.
   - During single-direction operation, if a single movement range exceeds 20% of the position value set in P6-52, error E1B12 is reported and the servo stops.

Common values

P6-50 = 10 (decimal) → Offline fully automatic tuning with acceleration/deceleration time 250000 usr_a

P6-50 = 13 (decimal) → Offline fully automatic tuning with acceleration/deceleration time 100000 usr_a

P6-50 = 15 (decimal) → Offline fully automatic tuning with acceleration/deceleration time 25000 usr_a

P6-50 = 20 (decimal) → Offline tuning inertia

P6-50 = 30 (decimal) → Automatic system stiffness setting based on inertia

P6-50 = 40 (decimal) → Offline tuning jerk (requires setting maximum speed/acceleration/motion range)

Modified settings become active immediately.

P6-52	RTATU_ATTTUNNINGPOSRANGEUSR	Minimum value	1	Unit	Related control mode		
		Factory setting	131072	user_p	P	V / Vz	T / Tz
		Maximum value	2147483647		MS	S	–
Parameter function:			**MODBUS address: 5406**				
Motion range settings **Modified settings become active immediately.**							

P6-53	RTATU_ATTTUNNINGROTVEL	Minimum value	1	Unit	Related control mode		
		Factory setting	300	usr_v	P	V / Vz	T / Tz
		Maximum value	13200		MS	S	–
Parameter function:			**MODBUS address: 5408**				
Motion target velocity settings **Modified settings become active immediately.**							

- Control loop parameters:

P0-02	Adaptive stiffness level	Minimum value	1	Unit	Related control mode		
		Factory setting	14	–	P	V / Vz	T / Tz
		Maximum value	32		MS	S	–

Parameter function: **MODBUS address: 5378**

Adaptive stiffness level

Set the system stiffness level when using the adaptive control loop and combine with the inertia ratio via the parameter P0-03 when the mode via the parameter P0-01 is set to 1, 2 or 3 to jointly control the system response.

When the parameter P0-01 is set to 1 or 2, the value via this parameter needs to be set manually.

When the parameter P0-01 is set to 3, the system attempts to automatically set the best stiffness level (increase up to 4 stiffness levels). As the set value becomes higher, the system response becomes faster, but vibration and noise are likely to occur. As the set value becomes lower, the system response becomes slower, but vibration and noise are unlikely to occur.

Modified settings become active immediately.

P1-03	Control parameter set 1: Velocity feed-forward control.	Minimum value	0	Unit	Related control mode		
		Factory setting	550	0.1%	P	–	–
		Maximum value	2000		MS	S	–

Parameter function: **MODBUS address: 4620**

Control parameter set 1 Velocity feed-forward control.

In increments of 0.1%.

In the ATT algorithm, the position loop tracking compensation coefficient is used. The larger the value, the smaller the Perr (tracking error), while maintaining the shape of the velocity curve.

When the value is sufficiently large, Perr (tracking error) = 0 can be achieved during the constant velocity phase.

Modified settings become active immediately.

P1-58	*CTRL1_ATT_SPDPRECOMPCOEF*	Minimun value	-1000	Unit	Relevant operating mode		
		Factory setting	0	0.1%	P	V / Vz	T / Tz
		Maximum value	10000		MS	S	–

Parameter function: **MODBUS address: 4648**

The unit of this parameter is percentage.

Value = 0: No compensation.

Value > 0: The larger the value, the closer $N^{act\ (actual\ speed)}$ approaches $N^{ref\ (target\ speed)}$, resulting in better tracking performance and stronger system rigidity.

Value < 0: The larger the value, the further $N^{act\ (actual\ speed)}$ deviates from $N^{ref\ (target\ speed)}$, resulting in poorer tracking performance and weaker system rigidity.

When the value is 1000, $N^{act\ (actual\ speed)}$ theoretically coincides with $N^{ref\ (target\ speed)}$.

When the value exceeds 1000, $N^{act\ (actual\ speed)}$ may theoretically exceed $N^{ref\ (target\ speed)}$.

The effectiveness of this parameter adjustment also requires coordination with the current loop low-pass filter. A smaller low-pass filter value yields better results.

P1-59	*CTRL1_ATT_KPPGAINFORPASSIVE*	Minimun value	0	Unit	Relevant operating mode		
		Factory setting	1000	0.1%	P	V / Vz	T / Tz
		Maximum value	3000		MS	S	–

Parameter function:	MODBUS address: 4652

The KPp scale value is expressed as a percentage.

A value of 1000 indicates no compensation.

This parameter is only effective in ATT Passive mode.

In Passive mode, KPp = KPp_Passive * scale / 1000.

Since KPp is automatically calculated, adjusting this parameter allows modification of the position loop gain.

In the ATT algorithm, the position loop tracking compensation coefficient is used. The larger the value, the smaller the Perr (tracking error), while maintaining the shape of the velocity curve.

When the value is sufficiently large, Perr (tracking error) = 0 can be achieved during the constant velocity phase.

ATT Algorithm Full-feature Mode Parameters

P0-01=6, indicating selection of the ATT algorithm full-function mode parameters. In addition to the core ATT algorithm parameters, this also includes the following parameters:

P1-57	*CTRL1_ATT_SPDLOOPFR*	Minimun value	10	Unit	Relevant operating mode		
		Factory setting	80	–	P	V / Vz	T / Tz
		Maximum value	5		MS	S	–

Parameter function: **MODBUS address: 4646**

This parameter sets the tracking capability of the speed loop, equivalent to its stiffness. The commonly used range is 20...80, with stiffness gradually increasing from 80 to 20.

P1-60	*CTRL1_ATT_POSENDINGCOEFPOS*	Minimun value	0	Unit	Relevant operating mode		
		Factory setting	0	–	P	V / Vz	T / Tz
		Maximum value	1000		MS	S	–

Parameter function: **MODBUS address: 4654**

Forward Motion Acceleration Damping Coefficient, unit: per thousand, ranging from 0...1000.

This parameter accelerates the convergence speed during position control stop without altering system stiffness. Higher values result in faster convergence. Excessively high values may cause speed overshoot.

This parameter is effective only in position mode.

P1-61	*CTRL1_ATT_POSENDINGCOEFNEG*	Minimun value	0	Unit	Relevant operating mode		
		Factory setting	0	–	P	V / Vz	T / Tz
		Maximum value	1000		MS	S	–

Parameter function: **MODBUS address: 4656**

Reverse Motion Acceleration Damping Coefficient, unit: per thousand, ranging from 0...1000.

This parameter accelerates the convergence speed during position control stop without altering system stiffness. Higher values result in faster convergence. Excessively high values may cause speed overshoot.

This parameter is effective only in position mode.

P1-62	*CTRL1_ATT_POSENDINGRATIO*	Minimun value	0	Unit	Relevant operating mode		
		Factory setting	100	–	P	V / Vz	T / Tz
		Maximum value	100		MS	S	–

Parameter function: **MODBUS address: 4658**

Tail Convergence Smoothness, unit: percentage, ranging from 1...100.

The default value is 100.

When this value is less than 100, the motor converges quickly during high-speed deceleration but slowly during low-speed deceleration. This enables the motor to transition to a stopped state at a smoother speed.

This parameter is only effective in position mode when the tail convergence coefficient function is enabled.

P1-63	*CTRL1_ATT_PERRTHRES*	Minimun value	0	Unit	Relevant operating mode		
		Factory setting	300	–	P	V / Vz	T / Tz
		Maximum value	65535		MS	S	–

Parameter function: **MODBUS address: 4660**

Tail Position Error Integral Threshold

When the position error is less than this value, the position error integral is automatically activated.

P1-64	*CTRL1_ATT_PERRINTEGGAINPOS*	Minimun value	0	Unit	Relevant operating mode		
		Factory setting	0	–	P	V / Vz	T / Tz
		Maximum value	32767		MS	S	–

Parameter function: **MODBUS address: 4662**

Tail Position Error Integral Coefficient (Forward) Unit: ms

Setting to 0 disables the forward integral function.

P1-65	*CTRL1_ATT_PERRINTEGGAINNEG*	Minimun value	0	Unit	Relevant operating mode		
		Factory setting	0	–	P	V / Vz	T / Tz
		Maximum value	32767		MS	S	–

Parameter function: **MODBUS address: 4664**

Tail Position Error Integral Coefficient (Reverse) Unit: ms

Setting to 0 disables the reverse integral function.

P1-66	*CTRL1_ATT_LOWSPDTHRESHOLD*	Minimun value	1	Unit	Relevant operating mode		
		Factory setting	50	–	P	V / Vz	T / Tz
		Maximum value	500		MS	S	–

Parameter function: **MODBUS address: 4666**

Low-Speed Integral Speed Threshold

When actual speed falls below this value, the speed error integral automatically activates.

P1-67	*CTRL1_ATT_LOWSPDINTEGGAINPOS*	Minimun value	0	Unit	Relevant operating mode		
		Factory setting	0	–	P	V / Vz	T / Tz
		Maximum value	32767		MS	S	–

Parameter function: **MODBUS address: 4668**

Low-Speed Speed Integration Coefficient (Forward) Unit: ms

When using this parameter, TNn also functions. It is recommended to set TNn=0.

P1-68	*CTRL1_ATT_LOWSPDINTEGGAINNEG*	Minimun value	0	Unit	Relevant operating mode		
		Factory setting	0	–	P	V / Vz	T / Tz
		Maximum value	32767		MS	S	–

Parameter function: **MODBUS address: 4670**

Tail Position Error Integral Coefficient (Reverse) Unit: ms

Setting to 0 disables the reverse integral function.

P1-69	*CTRL1_ATT_SPECIALCONF*	Minimun value	0	Unit	Relevant operating mode		
		Factory setting	0	–	P	V / Vz	T / Tz
		Maximum value	65535		MS	S	–

Parameter function: **MODBUS address: 4672**

Dicing Machine Specific Parameters

Bit0: Disable PTI compensation algorithm → 0x01 (Disabled)

Bit1: Reserved

Bit3/2: Position protection bit for die bonding machines

- 00 Do not enable position range protection
- 01 Motor index point ±60 degrees or more protection
- 10 Motor index point protection for angles exceeding ±180 degrees

When the motor's rotational position exceeds the set range, alarm E1B11 is triggered.

Bit4: Runaway Protection Enabled → Default enabled, 0x10 (disabled)

Runaway protection includes:

- Excessive position slip protection
- Severe inertia mismatch protection (insufficient inertia)

  NOTE: Speed Deviation Overrange Protection, use the following settings:
  - P6-34 Speed Overrange Threshold
  - P6-35 Speed Overrange Duration

P1-80	*CTRLG2_ATT_DVS_THRES*	Minimun value	0	Unit	Relevant operating mode		
		Factory setting	20	user_v	P	V / Vz	T / Tz
		Maximum value	1000		MS	S	–

Parameter function: **MODBUS address: 17946**

ATT algorithm: the speed threshold for damping vibration suppression.

P6-51	RTATU_ATTOPERATIONWORD	Minimum value	0	Unit	Related control mode		
		Factory setting	0	–	P	V / Vz	T / Tz
		Maximum value	5		MS	S	–

Parameter function: **MODBUS address: 5404**

Value=2: Reset ATT algorithm parameters

Modified settings become active immediately.

Usage of the ATT Algorithm

Enabling the ATT Algorithm

Parameter P0-01 is used to select the motion control algorithm.

- P0-01=6 activates the ATT algorithm in full-featured mode.
- P0-01=7 activates the ATT algorithm in core-function mode.

NOTE: The ATT algorithm uses only the internal KPp/KPn and CTRL/CTRL1 parameter sets for control parameters and does not support CTRL2/CTRL3 control set parameters.

Prerequisites for the ATT Algorithm

The prerequisites for the ATT Algorithm:

- Ensure P0-01 = 6/7.
- Confirm the servo has acquired IO permission or that the Somove/CPM-connected servo has acquired Modbus permission.
- The servo is in the RDY state.

Basic Parameter Settings for the ATT Algorithm

Basic parameter settings:

- P6-52: ATT Self-Tuning Range
- P6-53: ATT Self-Tuning Target Speed
- P4-02: Drive Internal Motion Acceleration
- P4-03: Drive Internal Motion Deceleration

Tuning project parameters and processes:

- P6-50 = 20 (HMI displays P6-50=2): Inertia self-tuning in progress

  The servo is in the ATT algorithm inertia tuning state. After moving according to the preset motion profile, the servo automatically returns to the RDY state, indicating that tuning is complete.
- P6-50 = 30 (HMI displays P6-50=3): Follows FR self-tuning

  The servo is in ATT algorithm learning stiffness state. Calculates the recommended speed loop stiffness (HMI displays a short time, making it difficult to identify).
- P6-50 = 40 (HMI displays P6-50=4): During jerk tuning

  The servo is in ATT algorithm jerk tuning mode. It will operate at the speed set in P6-53 and acceleration/deceleration values from P4-02/P4-03, reversing direction within the range defined by P6-52. After multiple cycles, it will automatically return to the RDY state, indicating tuning is complete.
- P6-50 = 10 (HMI displays 2/3/4 based on tuning project): All projects undergo automatic tuning sequentially by project number.

  The servo enters one-touch automatic tuning mode for the ATT algorithm. After executing the preset motion profile and achieving full-function stabilization, the servo automatically resumes the RDY state, indicating successful tuning completion.

NOTE:

- Under the control of IO/CPM, full-function auto-tuning via P6-50=10 is only permitted when the servo is in the Ready state. Otherwise, error E1626 will be reported.
- Self-tuning is only possible under the ATT control algorithm; otherwise, error E1626 will be reported.
- Sending another adjustment command during the adjustment process resulted in error ERR: E1626.
- Manual saving of parameters is required to complete the tuning process.

ATT algorithm tuning parameters

Tuning parameter	Description
P0-03	Inertia ratio
P0-02	System rigidity
P1-27	Jerk Filter Coefficient To ensure the accuracy of jerk filter coefficient self-tuning, it is recommended to set P4-01/02 to a value > 20000 usr_a before initiating tuning.
P1-05	Current Loop Low-pass Filter
P1-57	Speed loop tracking ratio → Affects KPn and KPp

To view the set KPp/KPn values, you can directly access them through P1-01 (KPn) and P1-00 (KPp).

Parameter	Address	One-Click Tuning Auto-Adjustment	Description
KPp	P1-00	Y (read-only)	KPp automatically adjusts based on a series of parameter changes and cannot be modified directly. Maximum value: 936.7 (1/s) To adjust the position loop gain, use P1-59 → KPp scale.
KPn	P1-01	Y (read-only)	KPn automatically adjusts based on the inertia ratio (P0-03) and FR (P1-57) and cannot be modified directly. To adjust the speed loop stiffness, modify FR (P1-57).
TNn	P1-02	N	Manual adjustment is possible.
FR	P1-57	Y	Manual adjustment is possible (direct adjustment is not recommended for general applications; it is best to adjust P0-02 system rigidity instead).
KFPp	P1-03	N	Manual adjustment is possible.
Filter			
TAUiref	P1-05	Y	Manual adjustment is possible.

KPp/KPn will automatically adjust based on inertia (P0-03), the speed loop FR (Following Rate), and the current loop low-pass filter parameter (P1-05).

P6-51 (OperationWord) = 2, reset ATT algorithm parameters.

Common Fine-tuning Parameters after One-click Self-tuning

If the one-touch self-tuning fails to meet the customer's requirements, performance can be improved primarily by adjusting the following parameters:

Parameter	Description
System rigidity P0-02	Adjust the overall stiffness of the system
KPp scale P1-59	Adjust the percentage of KPp
Speed loop tracking compensation P1-58	Adjusting the actual speed to improve tracking of the speed command
Integral constant TNn P1-02	Adjust overshoot and settling conditions
Speed feed forward P1-03	Further reduce position tracking error

ATT Algorithm Runaway Protection

To prevent servo systems from losing control due to unreasonable parameters, the ATT algorithm provides two protective functions that trigger error alerts when a risk of loss of control arises.

Error code	Description	Resolution
E1B13	Excessive positional slip During position control, the system acceleration exceeded the maximum acceleration the system can provide. This condition may prevent the system from performing effective control, posing a risk of loss of control. Therefore, when this risk occurs, the system will halt immediately.	Increase jerk filtering (recommended) Reduce KPp
E1B14	The inertia setting value is too low. The inertia setting value for P0-03 is significantly lower than the system's actual inertia value, creating a risk of loss of control during operation due to parameter mismatch.	Increase the inertia setting value for P0-03

Both protections can be disabled by setting Bit4=1 in P1-69. By default, Bit4=0 enables them.

Auxiliary Control Parameters of the ATT Algorithm

Rapid convergence function of position error

Parameter	Address	Resolution
Tail Convergence Coefficient (Forward)	P1-60	This parameter is only effective in position mode. Forward motion acceleration damping coefficient, unit: per thousand Range: 0...1000 This parameter accelerates the convergence speed during position control stop without altering system stiffness. Higher values result in faster convergence. Excessively high values may cause speed overshoot.
Tail Convergence Coefficient (Reverse)	P1-61	This parameter is only effective in position mode. Reverse motion acceleration damping coefficient, unit: per thousand Range: 0...1000 This parameter accelerates the convergence speed during position control stop without altering system stiffness. Higher values result in faster convergence. Excessively high values may cause speed overshoot.
Tail Convergence Smoothness	P1-62	This parameter is only effective in position mode when the tail convergence coefficient function is enabled. Tail convergence smoothness, measured in percentage, ranging from 1...100. Default value is 100. When this value is less than 100, the motor converges faster at high speeds and slower at low speeds during deceleration. This enables the motor to transition to a stop at a smoother speed.

Enable positive direction tail convergence coefficient P1-60=400 (40.0%). Acceleration remains unaffected, but deceleration convergence speed increases.

This parameter reduces tail convergence time during deceleration without altering speed or position loop stiffness.

The combined use of P1-60/61 (tail-end convergence coefficient) and P1-62 (tail-end convergence smoothness) produces a more pronounced S-shaped deceleration curve.

Local integral function for position error tail

Parameter	Address	Resolution
Tail Position Error Integral Threshold	P1-63	Tail Position Error Integral Threshold When the position error is less than this value, the position error integral is automatically activated.
Tail Position Error Integral Coefficient (Forward)	P1-64	Tail Position Error Integral Coefficient (Forward), unit: ms When set to 0, the forward integration function is disabled.
Tail Position Error Integral Coefficient (Reverse)	P1-65	Tail Position Error Integral Coefficient (Reverse), unit: ms When set to 0, the reverse integration function is disabled.

This feature is generally not used, but in applications requiring extremely high convergence speed and stability for positional error (such as die bonding machines), it can be employed to accelerate positional error convergence.

Low-speed velocity integration

Parameter	Address	Resolution
Low-speed speed integration threshold	P1-66	Low-speed speed integration threshold When the actual speed falls below this value, the speed error integral is automatically activated.
Low-Speed Speed Integral Coefficient (Forward)	P1-67	Low-Speed Speed Integral Coefficient (Forward), unit: ms **NOTE:** When using this parameter, TNn also functions; it is best to set TNn=0.
Low-Speed Speed Integral Coefficient (Reverse)	P1-68	Low-Speed Speed Integral Coefficient (Reverse), unit: ms **NOTE:** When using this parameter, TNn also functions; it is best to set TNn=0.

This function can be used in conjunction with the speed loop global integral P1-02 (TNn) or independently. Typically, when using this function, P1-02 should be set to 0 to disable the speed loop global integral feature.

This function is primarily intended for applications demanding extremely high convergence speed and stability for position error (such as die bonding machines), where it can accelerate position error convergence.

Disable PTI compensation algorithm

Parameter	Address	Resolution
Dedicated parameter	P1-69	Bit0: Disable PTI compensation algorithm → 0x01

- Bit 0 of P1-69 defaults to 0, meaning the PTI compensation algorithm is enabled by default.
- When this feature is enabled, the compensation algorithm's estimation may cause slight overshoot in position commands during low-speed stops, potentially adversely affecting certain high-precision applications.
- Set P1-69 Bit0=1 to disable the PTI compensation algorithm. Position commands will then reflect the actual number of pulses acquired without estimation, which may cause jerkiness at low speeds.

Bit 0 of P1-69 defaults to 0, meaning the PTI compensation algorithm is enabled by default.

Example of connecting load directly to motor

Perform the following steps to connect load to motor:

1. Set P0-01=6 to select ATT algorithm.
2. Set P4-02/03=250000 to configure acceleration/deceleration.

   The value 250000 is an example. It should be set based on the maximum acceleration in the customer's application. Setting it too low may prevent the correct jerk filter coefficient value from being identified.
3. Set P6-52=131072 usr_p / P6-53=1000 rpm to configure the autotuning range and speed. It is recommended to align these values with the customer's application specifications.
4. Connect CPM to the servo, acquire control permission, and ensure the servo is in the RDY state.
5. Set P6-50=10 (One-touch self-tuning mode) and wait for self-tuning to complete (until the RDY status is restored).

   After tuning is complete, you can view the tuning parameters:

   - P0-03=269 (inertia ratio)
   - P0-02=22 (System Rigidity)
   - P1-27=1 (Jerk Filter)
   - P1-05=25 (Current Command Smoothing Filter)
   - P1-57=50 (FR=5.0)
6. Enable the servo using debugging software and run the distance of 81072 usr_p at the target speed of 1000 rpm.

   The resulting speed/current curve is as follows:

   - Red line: Nact
   - Blue line: Nref
   - Pink line: Iact

   As shown in the figure, the maximum Perr value is approximately 14,000 usr_p.

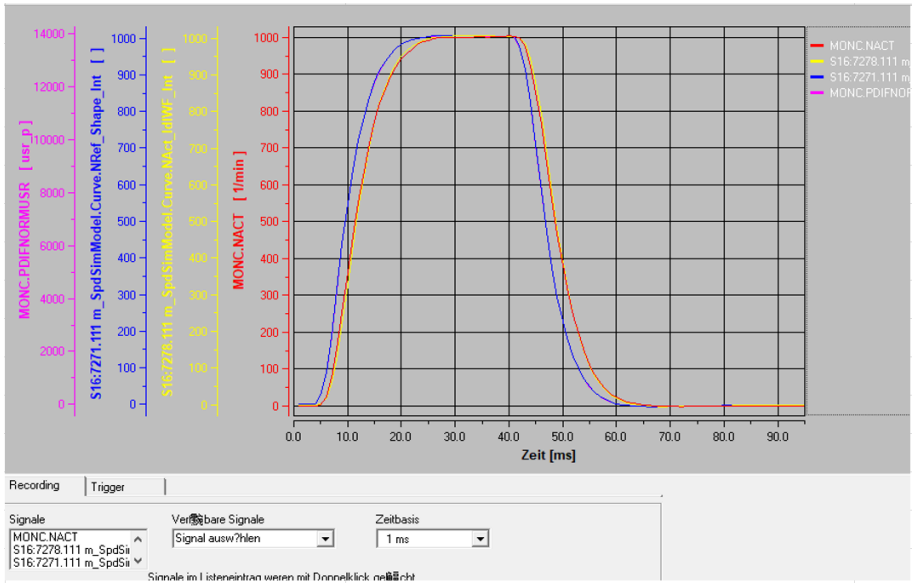

- Blue: Velocity Command
- Yellow: Actual Velocity Theoretical Value
- Red: Actual Velocity

Adaptive Notch Filter

Overview

Due to the mechanical load characteristics, high-order vibration components are often superimposed in actual motion, which will produce mechanical resonance and cause jitter and noise during the system operation. In practical applications, notch filters can be used to reduce the resonance of the resonance frequency point and improve the stable bandwidth of the system.

The adaptive notch filter can reduce the resonance point by analyzing the vibration component in the motor velocity, automatically infer the resonance frequency point, and automatically set the notch filter parameters for the resonance component.

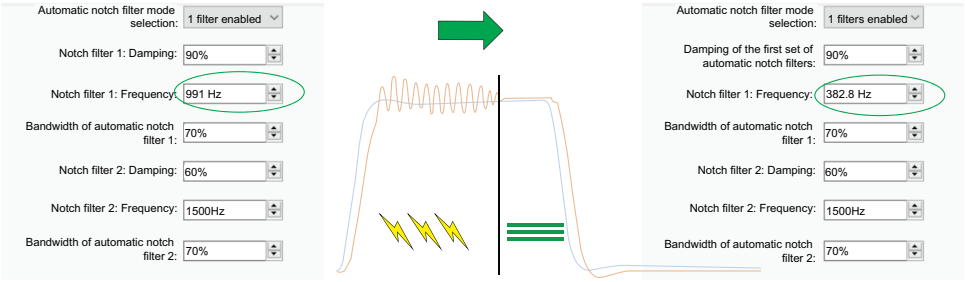

Operation method

Lexium18 servo drive supports two groups of adaptive notch filters, and the adaptive notch filter mode is selected via the parameter P2-00, and one group or two groups of adaptive notch filters can be activated at the same time.

When the resonance point is shown on the motor velocity, the servo drive will set the filter parameters according to the number of adaptive notch filters. If an offset occurs to the resonance point during motion, the servo drive automatically updates the filter parameters, thus adapting to the detected new resonance point. The adaptive notch filter parameters automatically detected by the servo drive are stored in the servo drive memory.

If the values of these parameters are not saved in the drive EEPROM, these parameters will be restored to the default values after the servo drive is restarted.

In particular, the servo drive will save the parameters of the servo drive into EEPROM every half hour:

- The servo drive will save the adaptive notch filter parameters at certain intervals to prevent these parameters from any failure after the drive is restarted
- If the system detects an incorrect resonance frequency point unexpectedly, causing the system to lose control, the user should immediately restart the servo drive to restore the adaptive notch filter parameters to the last saved values
- If you want to save manually through the HMI, you can select the parameter P2-02 to make it in the editing state, and then press and hold the S key to save the parameter afterwards.

P2-00	Automatic notch filter mode selection	Minimum value	0	Unit	Related control mode		
		Factory setting	0	–	P	V / Vz	T / Tz
		Maximum value	5		MS	S	–

Parameter function: **MODBUS address: 5390**

Selection of adaptive notch filter mode

0 / Invalid: Automatic notch filter is not automatically set, and the parameters of the adaptive notch filter remain unchanged.

1 / Enable 1: Enable adaptive notch filter 1.

2 / Enable 2: Enable adaptive notch filters 1 and 2.

3 / Reset: Reset adaptive notch filters 1 and 2.

4 / Enable 1 and turn off: Recognize 1 resonance point, enable 1 notch filter and turn off resonance point detection.

5 / Enable 2 and turn off: Recognize 2 resonance points, enable 2 notch filters and turn off resonance point detection.

Modified settings become active immediately.

P4-38	Inertia Filter Time Constant	Minimum value	0	Unit	Related control mode		
		Factory setting	0	ms	P	V/Vz	T/Tz
		Maximum value	10000		MS	S	–

Parameter function: **MODBUS address: 4488**

Set inertia filter time constant.

Modified setting become active immediately.

Resonance Detection Parameter Settings

The detection criterion of resonance points by adaptive notch filters can be set via the related parameters.

When the actual velocity vibration amplitude of the motor exceeds the vibration amplitude detection criteria and this situation continues for a certain period of time, resonance occurs.

There are two parameters in the detection criteria of resonance point, including the amplitude of vibration and the duration of vibration:

- Set the detection threshold of the vibration amplitude via the parameter P2-24.
- Set the detection threshold of the vibration duration via the parameter P2-25.

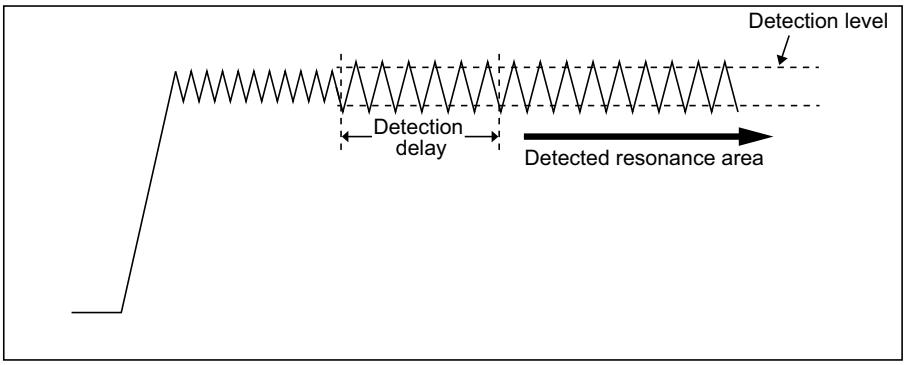

P2-24	Adaptive adjustment of vibration monitoring level	Minimum value	0	Unit	Related control mode		
		Factory setting	20	usr_v	P	V / Vz	T / Tz
		Maximum value	100		MS	S	–

Parameter function: **MODBUS address: 5394**

Adaptive adjustment of vibration monitoring level

Modified settings become active immediately.

P2-25	Adaptive adjustment of vibration detection delay	Minimum value	0	Unit	Related control mode		
		Factory setting	100	0.1 ms	P	V / Vz	T / Tz
		Maximum value	1000		MS	S	–

Parameter function: **MODBUS address: 5396**

Adaptive notch filter vibration detection delay

In increments of 0.1 ms.

Modified settings become active immediately.

Three Steps for Servo Commissioning

-	Parameter SN (LXM18)	Parameter name	Adaptive parameters (Default value)
Key adaptive parameters	P0-01	Adaptive mode selection	2
	P0-02	Adaptive stiffness level	14
	P0-03	Adaptive inertia ratio	2.5
	P2-00	Automatic notch filter mode selection	0
	P0-05	Adaptive control mode selection	0
	P1-39	Adaptive stiffness switch: Adaptive stiffness switch mode	0
Key adaptive parameters	P1-03	Control parameter set 1: Velocity loop feed-forward gain	55
	P1-22	Time constant of velocity feed-forward filter	0
	P1-27	Time constant of position command averaging filter	0
	P1-28	Time constant of the position loop command low-pass filter	0
	P1-19	Adaptive parameter integral action time 2	50
	P1-31	Filter time constant to smooth velocity of motor	0.1
	P1-23	Acceleration feed-forward control	0
Manually adjusted key PID parameters	P1-00	Control parameter set 1 Position controller P gain.	-
	P1-01	Control parameter set 1: Velocity controller P gain	-
	P1-02	Control parameter set 1: Velocity controller integral action time.	-
	P1-04	Control parameter set 1: Time constant of velocity loop command filter	0
	P1-05	Control parameter set 1: Filter time constant of the reference current value filter.	0.1

Step 1: The 4 most basic adaptive parameters

Mode selection (P0-01), stiffness level (P0-02), inertia ratio (P0-03) and automatic notch filter mode (P2-00)

Step 2: 4 feed-forward and filter parameters

Velocity loop feed-forward (P1-03), Time constant of velocity feed-forward filter (P1-22), Time constant of position command averaging filter (P1-27) and Time constant of the position loop command low-pass filter (P1-28)

Step 3: 5 other key parameters

Adaptive control mode selection (P0-05), Adaptive stiffness switch: adaptive stiffness switching mode (P1-39), adaptive parameter integral action time 2 (P1-19), filter time constant to smooth velocity of motor (P1-31), acceleration feed-forward control (P1-23)

Step 1: The 4 most basic adaptive parameters

Mode selection (P0-01), stiffness level (P0-02), inertia ratio (P0-03) and automatic notch filter mode (P2-00)

- Adaptive Mode Step 1: Select load type (P0-01) and stiffness (P0-02)

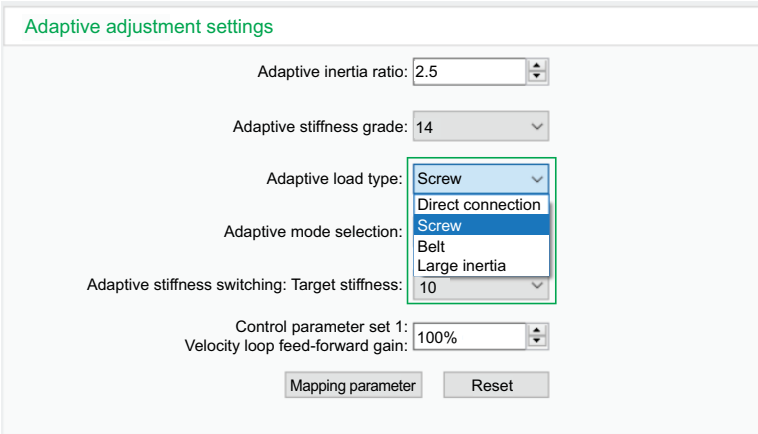

- Adaptive Mode Step 2: Enable resonance suppression (P2-00)

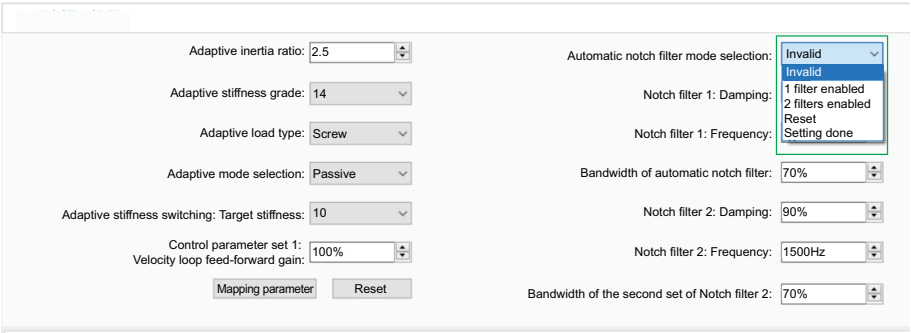

0/Invalid: Automatic notch filter is not automatically set, and the parameters of the adaptive notch filter remain unchanged.

1 / Enable 1: Enable adaptive notch filter 1.

2 / Enable 2: Enable adaptive notch filters 1and 2.

3 / Reset: Reset adaptive notch filters 1and 2.

- Adaptive Mode Step 3: Select adaptive mode (P0-01)

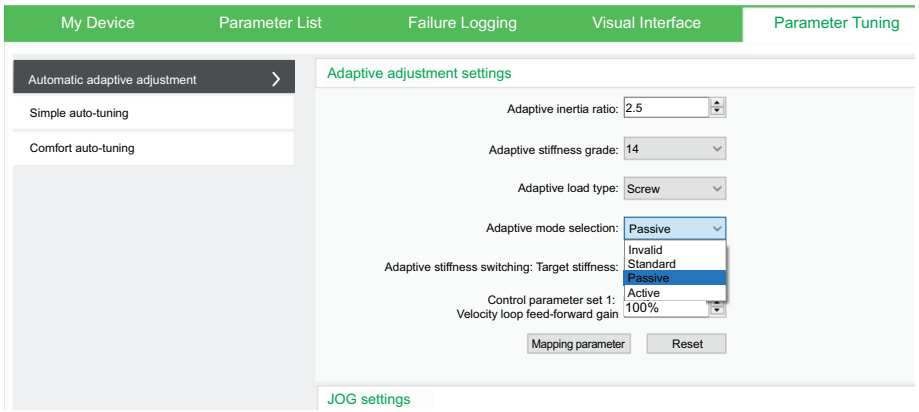

0 / Invalid: The adaptive operating mode is invalid and the serial PID control loop parameters via the parameter set P1 are used.

1 / Standard: In the standard adaptive operating mode, the servo drive automatically measures the system inertia ratio, the stiffness level is set manually, and adaptive control loop parameters are used.

2 / Passive: In the passive adaptive operating mode, the system inertia ratio and the stiffness level are set manually, and adaptive control loop parameters are used.

3 / Adaptive: In the active adaptive operating mode, the servo drive automatically measures the system inertia ratio, and tries to automatically set the best stiffness level (increase up to 4 stiffness levels); adaptive control loop parameters are used.

- Adaptive Mode Step 4: Test run (SoMove or user's host computer)

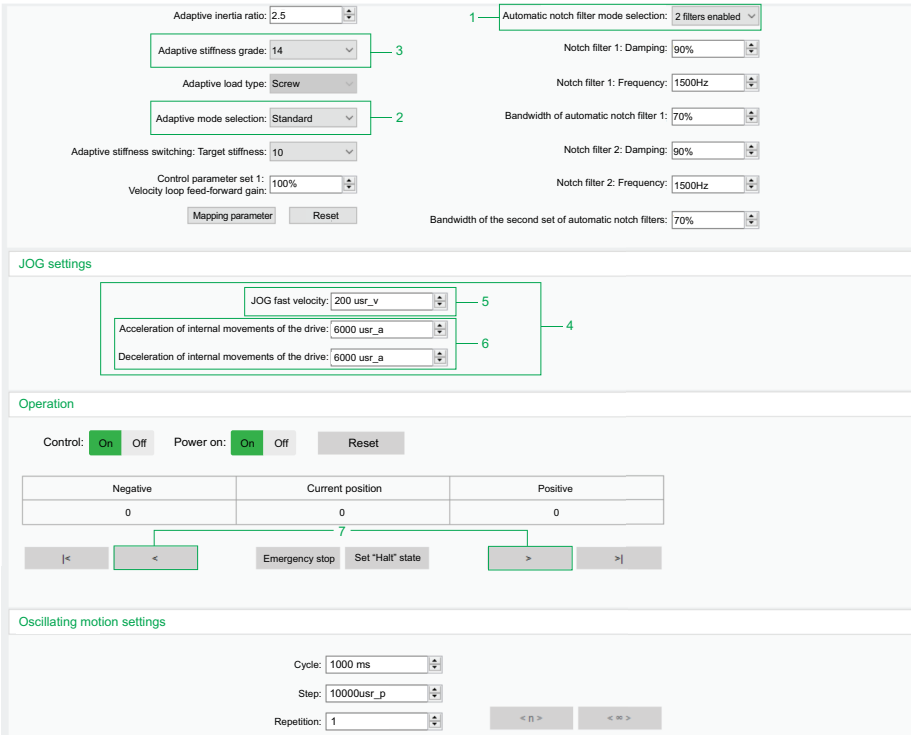

4. Set test run conditions, velocity and acceleration & deceleration

5. Velocity > 100 rpm

6. 1500 rpm/s < acceleration < (30000 rpm/s)

7. Operate several times (at least twice)

8. Independent identification in positive and negative directions; in most cases, operate to one direction several times

- Adaptive Mode Step 5: Parameter mapping

	Parameters	Designation	Current value
Control parameter set 1	P1-00	CTRL1_KPp	120 1/s
	P1-01	CTRL1_KPn	0.1404 A/(1/min)
	P1-02	CTRL1_TNn	11 ms
	P1-03	CTRL1_KFPp	55%
	P1-04	CTRL1_TAUnref	0 ms
	P1-05	CTRL1_TAUiref	0.1 ms
	P1-06	CTRL1_Kfric	0 Arms
	P1-07	CTRL2_KPp	65 1/s
	P1-08	CTRL2_KPn	0.042 A/(1/min)
	P1-09	CTRL2_TNn	16 ms
	P1-10	CTRL2_KFPp	55%
	P1-11	CTRL2_TAUnref	0 ms
	P1-12	CTRL2_TAUiref	0.25 ms
	P1-13	CTRL2_Kfric	0 Arms
Control parameter set 2	P1-14	CTRL3_KPp	20 1/s
	P1-15	CTRL3_KPn	0.0315 A/(1/min)
	P1-16	CTRL3_TNn	40 ms
	P1-17	CTRL3_TAUnref	0 ms
	P1-18	CTRL3_TAUiref	0.1 ms
	P1-19	RTATU_TnnUser2FRC	50 ms
Other key control parameters	P1-26	GEARjerklim	PosSyncOn
	P1-27	RAMP_v_jerk	0 ms
	P1-28	CTRL_TAUpref	0 ms
	P1-29	CTRL_SPDMOVEAVG	0 ms
	P1-30	CTRL_SpdFric	5 1/min
	P1-31	CTRL_TAUnact	0.1 ms
	P1-39	CTRL_DYNGNSWSET	Dynamic Stiffness Switching Disable

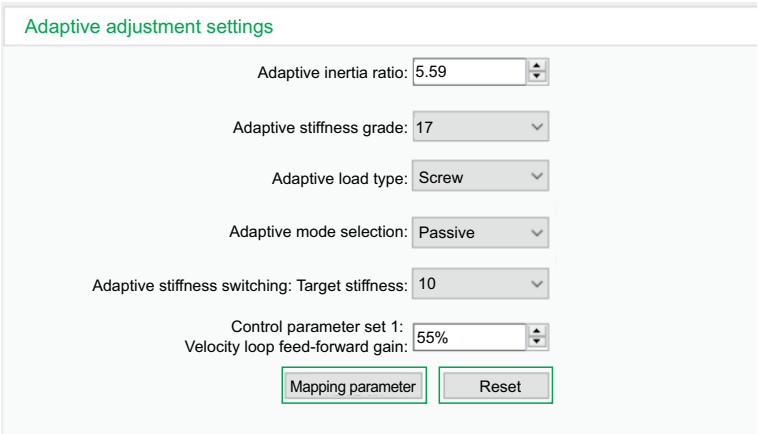

- Adaptive Mode Step 6: End

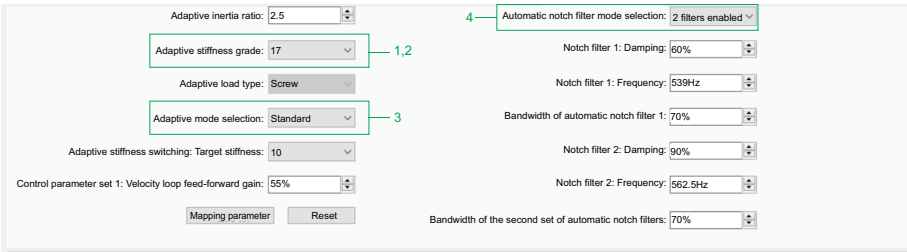

1. Manually increase or decrease stiffness
2. Observe the waveform, processing effect and machine condition, and adjust to the appropriate stiffness; in most cases, the stiffness of the machine micro-vibration is reduced by 1 level
3. Change the adaptive mode to the passive mode
4. Disable the automatic vibration suppression function

   NOTE: It is recommended to reset the automatic vibration suppression function at the new stiffness level and then identify the stiffness again

Step 2: 4 key feed-forward and filter parameters

Control parameter set 1: Velocity loop feed-forward (P1-03), Time constant of velocity feed-forward filter (P1-22), Time constant of position command averaging filter (P1-27) and Time constant of the position loop command low-pass filter (P1-28)

Key feed-forward and filter parameters

Functional block diagram

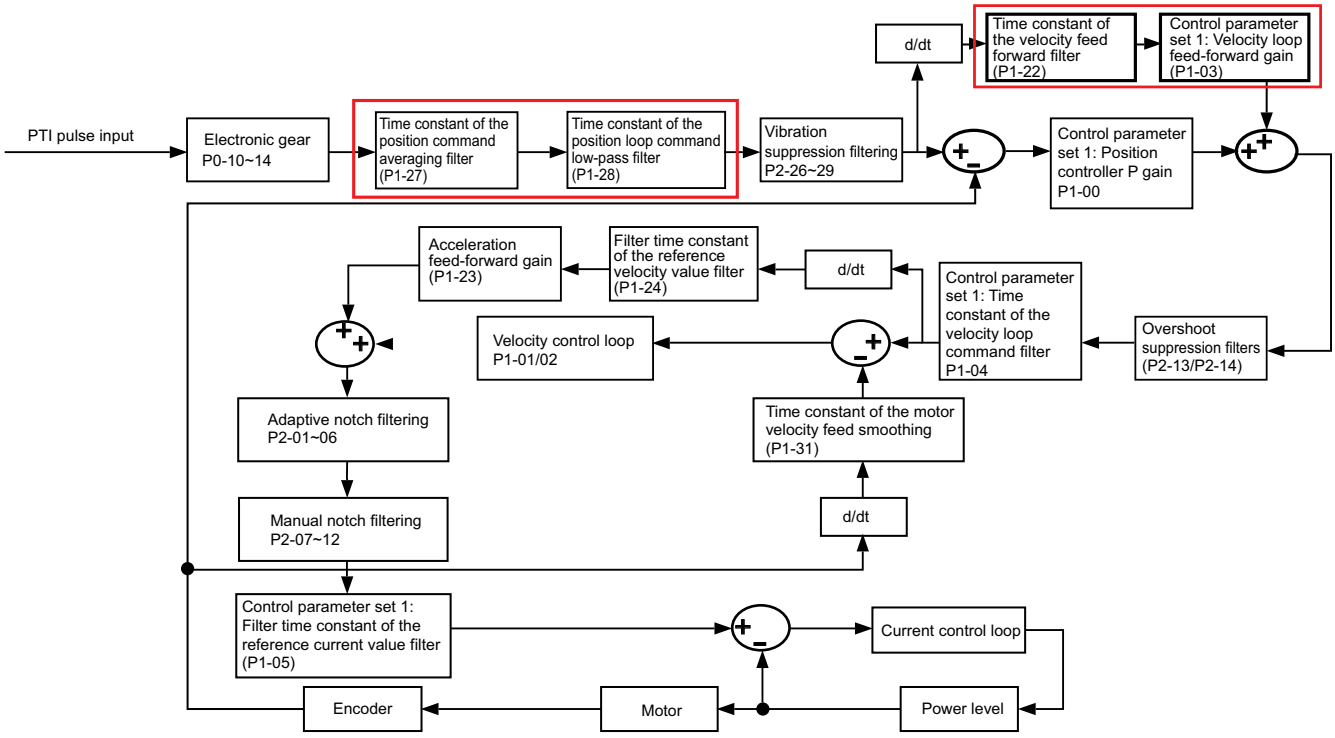

Time constant of position command averaging filter **P1-27**

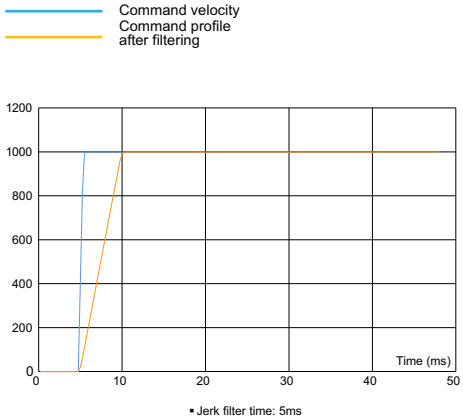

Time constant of the position loop command low-pass filter **P1-28**

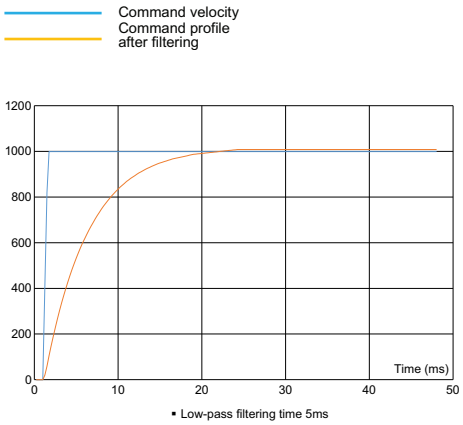

Filter effect: Time constant of position command averaging filter (P1-27) + Time constant of the position loop command low-pass filter (P1-28)

PosCmd	Position command
PosCmd_Jerk16	Position command + P1-27
PosCmd_LF16	Position command + P1-28
PosCmdJerk+LF16	Position command + P1-27 + P1-28

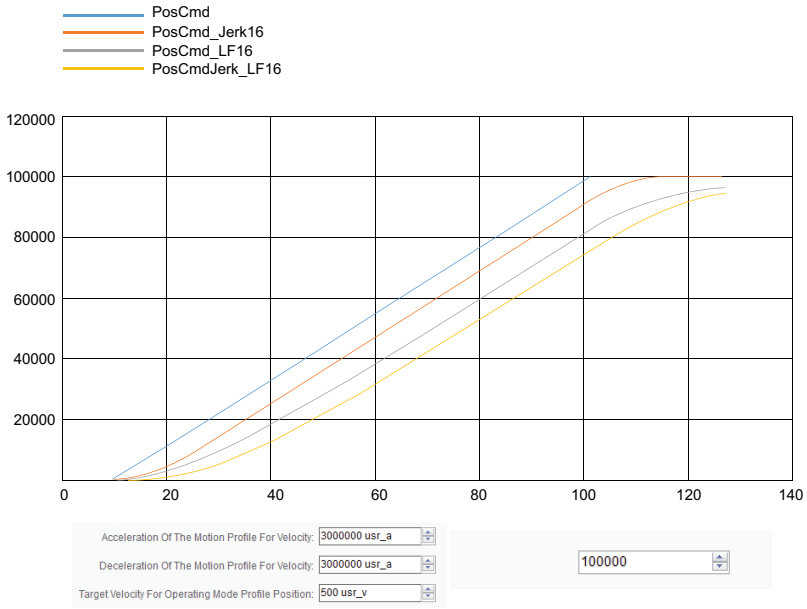

Time constant of position command averaging filter **P1-27**

Command velocity
Actual velocity
Position error

Jerk filter (P1-27)	0
Low-pass filter (P1-28)	0
Velocity loop feed-forward (P1-03)	55%
Velocity loop feed-forward filter (P1-22)	0

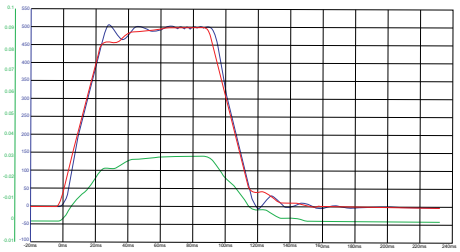

P1-22	CTRL_TAUSPDFFD	0 ms
P1-23	CTRL_KFAcc	0 %
P1-24	CTRL_TAUACCFFD	0 ms
P1-25	CTRL_KFLoad	0 %
P1-26	GEARjerklim	PosSyncOn
P1-27	RAMP_v_jerk	0 ms
P1-28	CTRL_TAUpref	0 ms
P1-29	CTRL_SPDMOVEAVG	0 ms
P1-30	CTRL_SpdFric	5.1/min
P1-31	CTRL_TAUnact	0.1 ms

Jerk filter (P1-27)	16 ms
Low-pass filter (P1-28)	0
Velocity loop feed-forward (P1-03)	55%
Velocity loop feed-forward filter (P1–22)	0

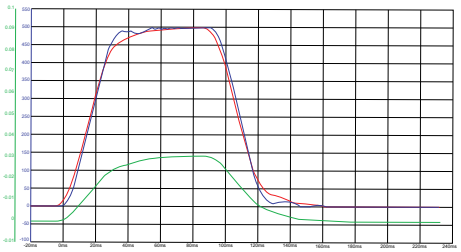

P1-22	CTRL_TAUSPDFFD	0 ms
P1-23	CTRL_KFAcc	0 %
P1-24	CTRL_TAUACCFFD	0 ms
P1-25	CTRL_KFLoad	0 %
P1-26	GEARjerklim	PosSyncOn
P1-27	RAMP_v_jerk	16 ms
P1-28	CTRL_TAUpref	0 ms
P1-29	CTRL_SPDMOVEAVG	0 ms
P1-30	CTRL_SpdFric	5.1/min
P1-31	CTRL_TAUnact	0.1 ms

Time constant of position command averaging filter **P1-28**

Command velocity
Actual velocity
Position error

Jerk filter (P1-27)	16 ms
Low-pass filter (P1-28)	0
Velocity loop feed-forward (P1-03)	55%
Velocity loop feed-forward filter (P1–22)	0

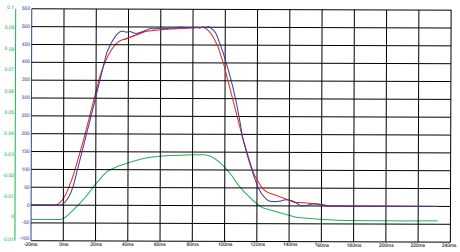

P1-22	CTRL_TAUSPDFFD	0 ms
P1-23	CTRL_KFAcc	0 %
P1-24	CTRL_TAUACCFFD	0 ms
P1-25	CTRL_KFLoad	0 %
P1-26	GEARjerklim	PosSyncOn
P1-27	RAMP_v_jerk	16 ms
P1-28	CTRL_TAUpref	0 ms
P1-29	CTRL_SPDMOVEAVG	0 ms
P1-30	CTRL_SpdFric	5.1/min
P1-31	CTRL_TAUnact	0.1 ms

Jerk filter (P1-27)	16 ms
Low-pass filter (P1-28)	8 ms
Velocity loop feed-forward (P1-03)	55%
Velocity loop feed-forward filter (P1–22)	0

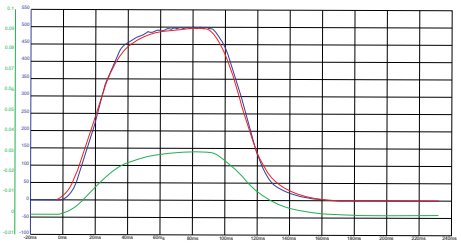

P1-22	CTRL_TAUSPDFFD	0 ms
P1-23	CTRL_KFAcc	0 %
P1-24	CTRL_TAUACCFFD	0 ms
P1-25	CTRL_KFLoad	0 %
P1-26	GEARjerklim	PosSyncOn
P1-27	RAMP_v_jerk	16 ms
P1-28	CTRL_TAUpref	8 ms
P1-29	CTRL_SPDMOVEAVG	0 ms
P1-30	CTRL_SpdFric	5.1/min
P1-31	CTRL_TAUnact	0.1 ms

Velocity loop feed-forward effect: P1-03

Command velocity
Actual velocity
Position error

Jerk filter (P1-27)	16 ms
Low-pass filter (P1-28)	8 ms
Velocity loop feed-forward (P1-03)	55%
Velocity loop feed-forward filter (P1–22)	0

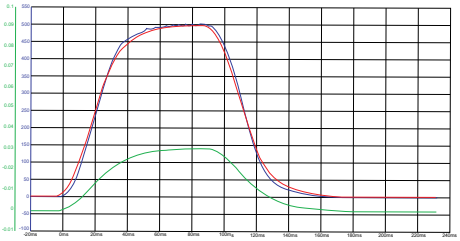

P1-03	CTRL_KFPp	55 %
P1-22	CTRL_TAUSPDFFD	0 ms
P1-23	CTRL_KFAcc	0 %
P1-24	CTRL_TAUACCFFD	0 ms
P1-25	CTRL_KFLoad	0 %
P1-26	GEARjerklim	PosSyncOn
P1-27	RAMP_v_jerk	16 ms
P1-28	CTRL_TAUpref	8 ms
P1-29	CTRL_SPDMOVEAVG	0 ms
P1-30	CTRL_SpdFric	5.1/min
P1-31	CTRL_TAUnact	0.1 ms

Jerk filter (P1-27)	16 ms
Low-pass filter (P1-28)	8 ms
Velocity loop feed-forward (P1-03)	100%
Velocity loop feed-forward filter (P1–22)	0

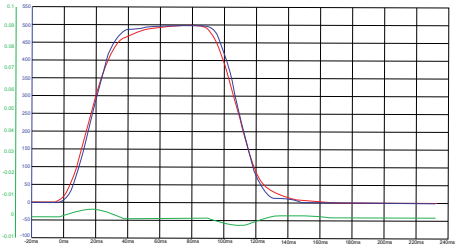

P1-03	CTRL_KFPp	100%
P1-22	CTRL_TAUSPDFFD	0 ms
P1-23	CTRL_KFAcc	0 %
P1-24	CTRL_TAUACCFFD	0 ms
P1-25	CTRL_KFLoad	0 %
P1-26	GEARjerklim	PosSyncOn
P1-27	RAMP_v_jerk	16 ms
P1-28	CTRL_TAUpref	8 ms
P1-29	CTRL_SPDMOVEAVG	0 ms
P1-30	CTRL_SpdFric	5.1/min
P1-31	CTRL_TAUnact	0.1 ms

Time constant of velocity loop feed-forward filter P1-22

Command velocity
Actual velocity
Position error

Jerk filter (P1-27)	0
Low-pass filter (P1-28)	0
Velocity loop feed-forward (P1-03)	70%
Velocity loop feed-forward filter (P1–22)	0

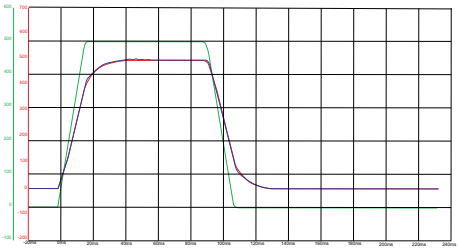

P1-22	CTRL_TAUSPDFFD	0 ms
P1-23	CTRL_KFAcc	100 %
P1-24	CTRL_TAUACCFFD	0 ms
P1-25	CTRL_KFLoad	0 %
P1-26	GEARjerklim	PosSyncOn
P1-27	RAMP_v_jerk	0 ms
P1-28	CTRL_TAUpref	0 ms
P1-29	CTRL_SPDMOVEAVG	0 ms

Jerk filter (P1-27)	0
Low-pass filter (P1-28)	0
Velocity loop feed-forward (P1-03)	70%
Velocity loop feed-forward filter (P1–22)	5 ms

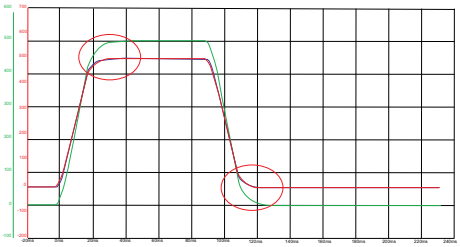

P1-22	CTRL_TAUSPDFFD	5 ms
P1-23	CTRL_KFAcc	100 %
P1-24	CTRL_TAUACCFFD	0 ms
P1-25	CTRL_KFLoad	0 %
P1-26	GEARjerklim	PosSyncOn
P1-27	RAMP_v_jerk	0 ms
P1-28	CTRL_TAUpref	0 ms
P1-29	CTRL_SPDMOVEAVG	0 ms
P1-30	CTRL_SpdFric	5.1/min
P1-31	CTRL_TAUnact	0.1 ms

Step 3: 5 other key parameters

Adaptive control mode selection (P0-05), Adaptive stiffness switch: adaptive stiffness switching mode (P1-39), adaptive parameter integral action time 2 (P1-19), filter time constant to smooth velocity of motor (P1-31), acceleration feed-forward control (P1-23)

Functional block diagram

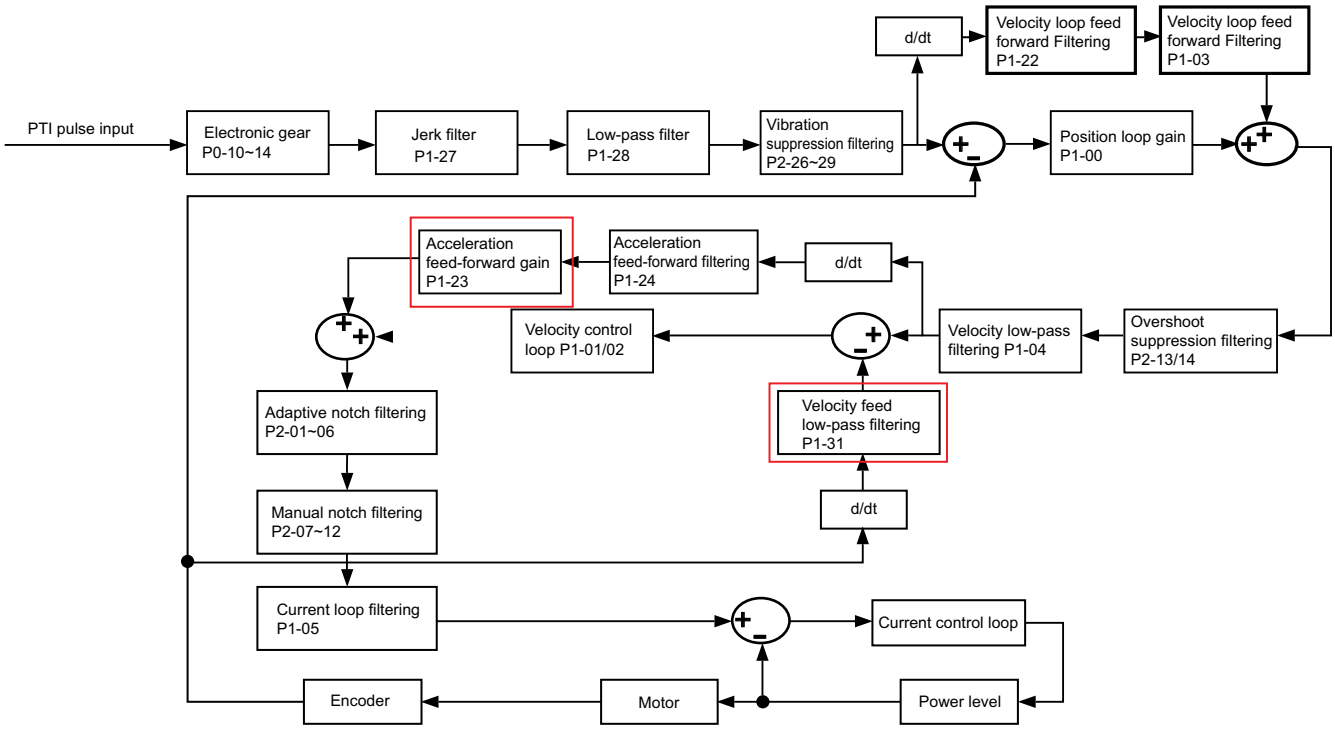

Acceleration feed-forward control P1-23

Command velocity
Actual velocity
Position error

Jerk filter (P1-27)	16 ms
Low-pass filter (P1-28)	8 ms
Velocity loop feed-forward (P1-03)	100%
Velocity loop feed-forward filter (P1–22)	0
Acceleration feed-forward (P1-23)	0

Jerk filter (P1-27)	16 ms
Low-pass filter (P1-28)	8 ms
Velocity loop feed-forward (P1-03)	100%
Velocity loop feed-forward filter (P1–22)	0
Acceleration feed-forward (P1-23)	50%

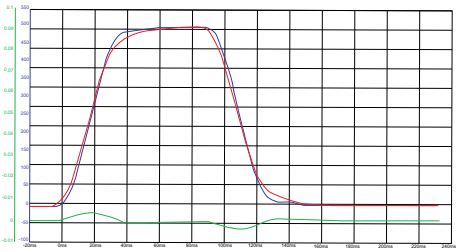

P1-22	CTRL_TAUSPDFFD	0 ms
P1-23	CTRL_KFAcc	0 %
P1-24	CTRL_TAUACCFFD	0 ms
P1-25	CTRL_KFLoad	0 %
P1-26	GEARjerklim	PosSyncOn
P1-27	RAMP_v_jerk	16 ms
P1-28	CTRL_TAUpref	8 ms
P1-29	CTRL_SPDMOVEAVG	0 ms
P1-30	CTRL_SpdFric	5.1/min
P1-31	CTRL_TAUnact	0.1 ms

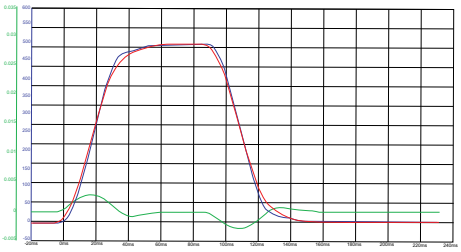

P1-22	CTRL_TAUSPDFFD	0 ms
P1-23	CTRL_KFAcc	50 %
P1-24	CTRL_TAUACCFFD	0 ms
P1-25	CTRL_KFLoad	0 %
P1-26	GEARjerklim	PosSyncOn
P1-27	RAMP_v_jerk	16 ms
P1-28	CTRL_TAUpref	8 ms
P1-29	CTRL_SPDMOVEAVG	0 ms
P1-30	CTRL_SpdFric	5.1/min
P1-31	CTRL_TAUnact	0.1 ms

Filter time constant to smooth velocity of motor: P1-31

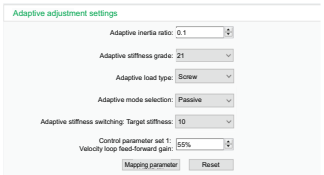

P1-19	RTATU_TnnUser2FRC	0 ms
P1-22	CTRL_TAUSPDFFD	0 ms
P1-23	CTRL_KFAcc	0 %
P1-24	CTRL_TAUACCFFD	0 ms
P1-25	CTRL_KFLoad	0 %
P1-26	GEARjerklim	PosSyncOn
P1-27	RAMP_v_jerk	16 ms
P1-28	CTRL_TAUpref	0 ms
P1-29	CTRL_SPDMOVEAVG	0 ms
P1-30	CTRL_SpdFric	5.1/min
P1-31	CTRL_TAUnact	0.1 ms

Velocity feed filtering (P1-31) = 0.1ms

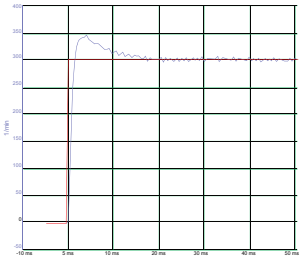

Velocity feed filtering (P1-31) = 0.38ms

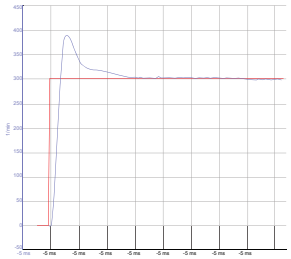

P1-31	Tr(ms)	Tp(ms)	Ts(ms)	P.O(%)	Ripple
0.38 ms	1.25	2.75	12.5	29.67	(0,3)
0.1ms	1.25	4.25	12.5	15.33	(-3,5)

The velocity feedback filtering time constant smooths the velocity feedback filtering signal and filters out high-frequency components. The larger the filtering time constant, the smaller the velocity ripple, but the system's response bandwidth becomes narrower, which may cause system instability and machine vibration. Conversely, the smaller the filtering time constant, the larger the velocity ripple, but the system can achieve faster response performance and improve processing efficiency. Therefore, in practical servo debugging, the filtering time constant can be adjusted according to the requirements of the processing system, usually between 0 and 0.5 ms.

High positioning mode (large integral mode):
Adaptive control mode selection P0-05 +
adaptive parameter integral action time 2 P1-19

Command velocity
Actual velocity
Position error

Jerk filter (P1-27)	16 ms
Low-pass filter (P1-28)	0ms
Velocity loop feed-forward (P1-03)	55%
Velocity loop feed-forward filter (P1–22)	0
Stiffness scale mode (P0-05)	1
Stiffness scale II integral time (P1-19)	50 ms

Jerk filter (P1-27)	16 ms
Low-pass filter (P1-28)	0 ms
Velocity loop feed-forward (P1-03)	55%
Velocity loop feed-forward filter (P1–22)	0
Stiffness scale mode (P0-05)	1
Stiffness scale II integral time (P1-19)	300 ms

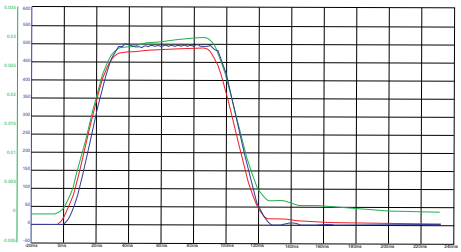

P1-19	RTATU_TnnUser2FRC	50 ms
P1-22	CTRL_TAUSPDFFD	0 ms
P1-23	CTRL_KFAcc	0 %
P1-24	CTRL_TAUACCFFD	0 ms
P1-25	CTRL_KFLoad	0 %
P1-26	GEARjerklim	PosSyncOn
P1-27	RAMP_v_jerk	16 ms
P1-28	CTRL_TAUpref	0 ms
P1-29	CTRL_SPDMOVEAVG	0 ms
P1-30	CTRL_SpdFric	5.1/min
P1-31	CTRL_TAUnact	0.1 ms

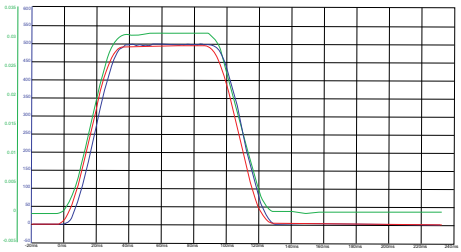

P1-19	RTATU_TnnUser2FRC	50 ms
P1-22	CTRL_TAUSPDFFD	0 ms
P1-23	CTRL_KFAcc	0 %
P1-24	CTRL_TAUACCFFD	0 ms
P1-25	CTRL_KFLoad	0 %
P1-26	GEARjerklim	PosSyncOn
P1-27	RAMP_v_jerk	16 ms
P1-28	CTRL_TAUpref	0 ms
P1-29	CTRL_SPDMOVEAVG	0 ms
P1-30	CTRL_SpdFric	5.1/min
P1-31	CTRL_TAUnact	0.1 ms

Adaptive stiffness switching: Adaptive stiffness switching mode: P1-39

Two application scenarios

- The machine generates micro-vibrations under static conditions. Reduce the 2nd group of stiffness to eliminate oscillation
- The 1st stiffness scale adopts the large integral mode. In order to eliminate the accumulated error at a standstill, the 2nd group stiffness scale adopts the normal stiffness scale

NOTE: In a servo control system, stiffness refers to the system's ability to respond to input signals Specifically, stiffness is defined as the ability of the system to quickly and accurately respond to commands and maintain stable operation This means that the system can quickly adapt to different loads and disturbances and control the output in a stable manner.

Stiffness is related to the parameters of the servo driver. For LXM18, a set of parameters related to servo response, represented by a number X, is called stiffness X LXM18 provides 32 sets of standard stiffness, with each set corresponding to the combination of the position loop gain P1-00, velocity loop gain P1-01, velocity loop integration time P1-02 and current loop filtering P1-05.

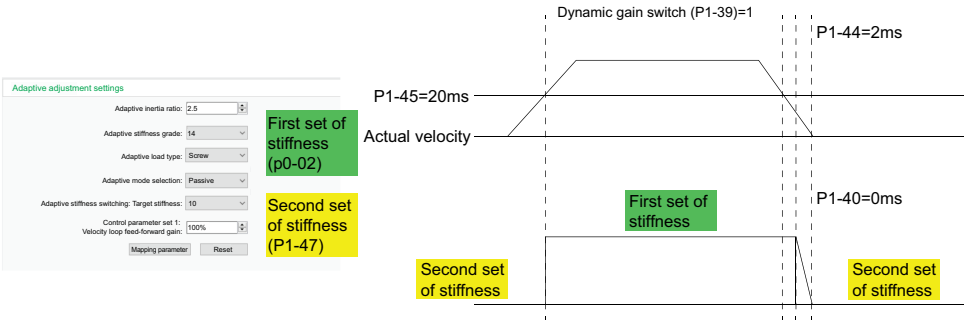

Dynamic gain and high positioning mode (large integral mode):

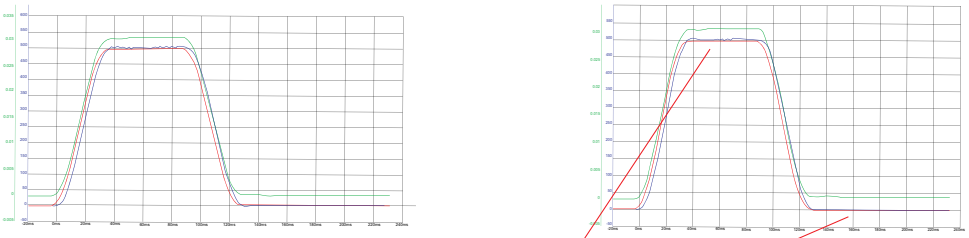

P1-19	RTATU_TnnUser2FRC	300 ms
P1-22	CTRL_TAUSPDFFD	0 ms
P1-23	CTRL_KFAcc	0 %
P1-24	CTRL_TAUACCFFD	0 ms
P1-25	CTRL_KFLoad	0 %
P1-26	GEARjerklim	PosSyncOn
P1-27	RAMP_v_jerk	16 ms
P1-28	CTRL_TAUpref	0 ms
P1-29	CTRL_SPDMOVEAVG	0 ms
P1-30	CTRL_SpdFric	5.1/min
P1-31	CTRL_TAUnact	0.1 ms

P1-19	RTATU_TnnUser2FRC	300 ms
P1-22	CTRL_TAUSPDFFD	0 ms
P1-23	CTRL_KFAcc	0 %
P1-24	CTRL_TAUACCFFD	0 ms
P1-25	CTRL_KFLoad	0 %
P1-26	GEARjerklim	PosSyncOn
P1-27	RAMP_v_jerk	16 ms
P1-28	CTRL_TAUpref	0 ms
P1-29	CTRL_SPDMOVEAVG	0 ms
P1-30	CTRL_SpdFric	5.1/min
P1-31	CTRL_TAUnact	0.1 ms

Manual Gain Adjustment (Basic)

Overview

Lexium18 has an effective function of automatic control loop parameter adjustment. However, limited by the actual load and other conditions, the operation of Autotuning function cannot effectively adjust the control loop parameters, or it is hoped that the servo system can have a better response and stability. Under such circumstance, you need to readjust the control loop parameters via manual gain adjustment.

It is recommended to use the SoMove software for manual gain adjustment. The SoMove software supports oscilloscope functionality, allowing for a visual display of the servo system's operating state. Compared to manually adjusting gains using the device's integrated HMI front panel, using the SoMove software for manual adjustment is more accurate and efficient.

For manual adjustment of control loop parameters in position control mode, it is recommended to first optimize the velocity loop and then the position loop.

Servo Control Loop Block Diagram Overview

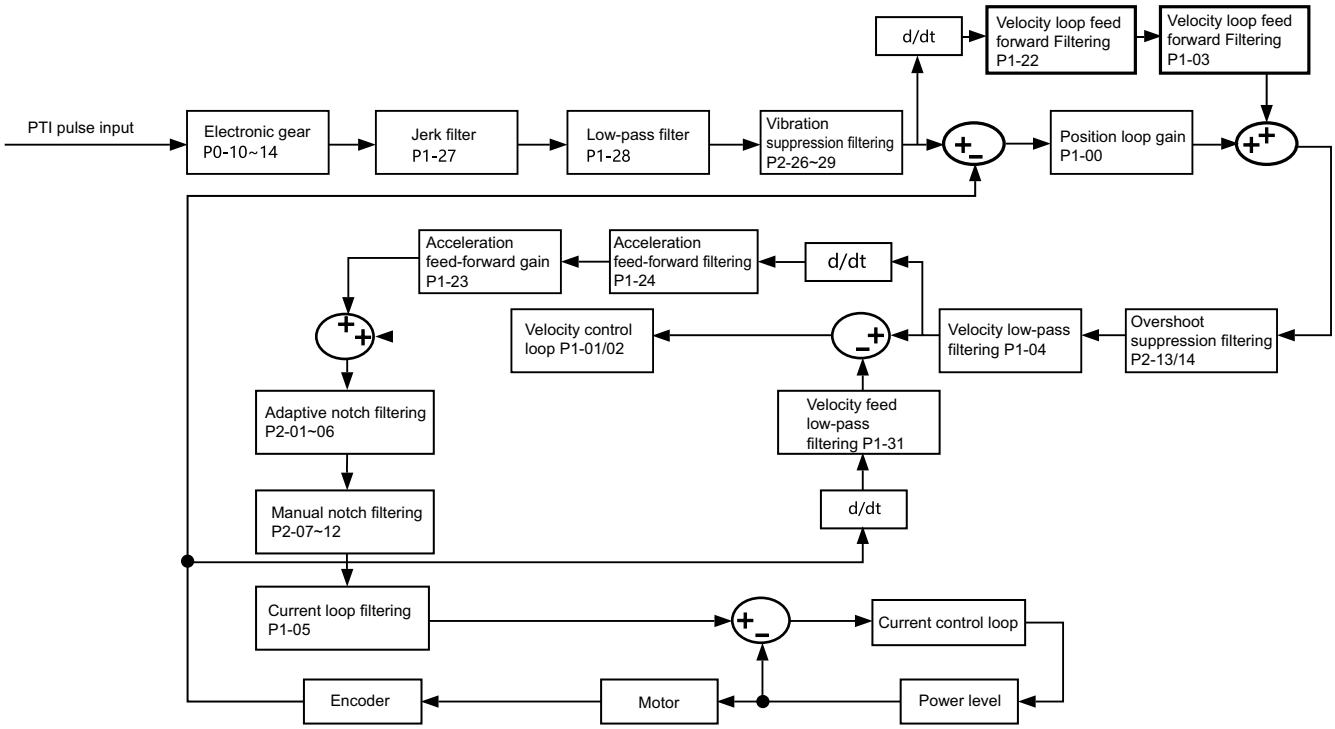

Conversion of Adaptive Control Loop Parameters to Serial PID Control Loop Parameters

If the adaptive control loop mode is used before manually adjusting the control loop parameters, the adaptive control loop parameters can be equivalently converted to the parameters in the serial PID control loop, and then the control loop mode of the servo drive can be switched to the serial PID control loop mode.

You can also convert the adaptive control loop parameters to the parameters in the serial PID control loop via the front panel of the HMI integrated with the device, and then switch the control loop mode of the servo drive to the serial PID control loop.

There are two ways of converting the adaptive control loop parameters into serial PID control loop parameters:

- Convert via the HMI front panel integrated with the device:
  1. Enter the panel **OP > Atu > cPYA** Group.
  2. Click the S button and the content displayed on the panel flashes once, indicating the successful conversion of control loop parameter
- Convert via the SoMove software:
  1. Enter the interface **Parameter Tuning> > Automatic Adaptive Adjustment**.
  2. Click the “Mapping” button, the software starts the conversion of parameters and pops up a dialog box after conversion, click and confirm the contents of the dialog box, and the control loop parameters are successfully converted.

Optimization of Velocity Loop

Parameter used for optimization of velocity loop in Control parameter set 1:

- P1-01** Control parameter set 1: Velocity controller P gain.
- P1-02** Control parameter set 1: Velocity controller integral action time.

P0-01	Adaptive mode selection	Minimum value	0	Unit	Related control mode		
		Factory setting	2	–	P	V / Vz	T / Tz
		Maximum value	8		MS	S	–
Parameter function:			MODBUS address: 5386				

Adaptive mode selection

0 / Invalid: The adaptive operating mode is invalid and the serial PID control loop parameters via the parameter set P1 are used.

1 / Standard: In the standard adaptive operating mode, the servo drive automatically measures the system inertia ratio, the stiffness level is set manually, and adaptive control loop parameters are used.

2 / Passive: In the passive adaptive operating mode, the system inertia ratio and the stiffness level are set manually, and adaptive control loop parameters are used.

3 / Adaptive: In the active adaptive operating mode, the servo drive automatically measures the system inertia ratio, and tries to automatically set the best stiffness level (increase up to 4 stiffness levels); adaptive control loop parameters are used.

4 / Reset: Reset commissioning parameters.

6 / ATT: Enable ATT algorithm full-feature mode.

7 / ATT Lite: Enable the core functional mode of the ATT algorithm.

Modified settings become active immediately.

P0-02	Adaptive stiffness level	Minimum value	1	Unit	Related control mode		
		Factory setting	14	–	P	V / Vz	T / Tz
		Maximum value	32		MS	S	–

Parameter function: **MODBUS address: 5378**

Adaptive stiffness level

Set the system stiffness level when using the adaptive control loop and combine with the inertia ratio via the parameter P0-03 when the mode via the parameter P0-01 is set to 1, 2 or 3 to jointly control the system response.

When the parameter P0-01 is set to 1 or 2, the value via this parameter needs to be set manually.

When the parameter P0-01 is set to 3, the system attempts to automatically set the best stiffness level (increase up to 4 stiffness levels). As the set value becomes higher, the system response becomes faster, but vibration and noise are likely to occur. As the set value becomes lower, the system response becomes slower, but vibration and noise are unlikely to occur.

Modified settings become active immediately.

Parameter used for optimization of velocity loop in Control parameter set 2:

- P1-08** Control parameter set 2: Velocity controller P gain.
- P1-09** Control parameter set 2: Velocity controller integral action time.

P1-08	Control parameter set 2: Velocity controller P gain.	Minimum value	1	Unit	Related control mode		
		Factory setting	1	0.0001 A/min^{-1}	P	V / Vz	–
		Maximum value	25400		MS	S	–

Parameter function: **MODBUS address: 4866**

Control parameter set 2: Velocity controller P gain.

In increments of 1 0.0001 A/(1/min).

Modified settings become active immediately.

P1-09	Control parameter set 2: Velocity controller integral action time.	Minimum value	0	Unit	Related control mode		
		Factory setting	1600	0.01 ms	P	V / Vz	–
		Maximum value	32767		MS	S	–

Parameter function: **MODBUS address: 4868**

Control parameter set 2: Velocity controller integral action time.

In increments of 0.01 ms.

Modified settings become active immediately.

Parameter used for optimization of velocity loop in Control parameter set 3:

- P1-15** Control parameter set 3: Velocity controller P gain.
- P1-16** Control parameter set 3: Velocity controller integral action time.

P1-15	Control parameter set 3: Velocity controller P gain.	Minimum value	1	Unit	Related control mode		
		Factory setting	1	0.0001 A/min^{-1}	P	V / Vz	–
		Maximum value	25400		MS	S	–

Parameter function: **MODBUS address: 5122**

Control parameter set 3 Velocity controller P gain.

In increments of 1 0.0001 A/(1/min).

Modified settings become active immediately.

P1-16	Control parameter set 3: Velocity controller integral action time.	Minimum value	0	Unit	Related control mode		
		Factory setting	4000	0.01 ms	P	V / Vz	–
		Maximum value	32767		MS	S	–

Parameter function: **MODBUS address: 5124**

Control parameter set 3 Velocity controller integral action time.

In increments of 0.01 ms.

Modified settings become active immediately.

When optimizing the velocity loop, it is necessary to consider the characteristics of the load system, including it is the system with rigid coupling and quick response, or the system with flexible coupling and slow response:

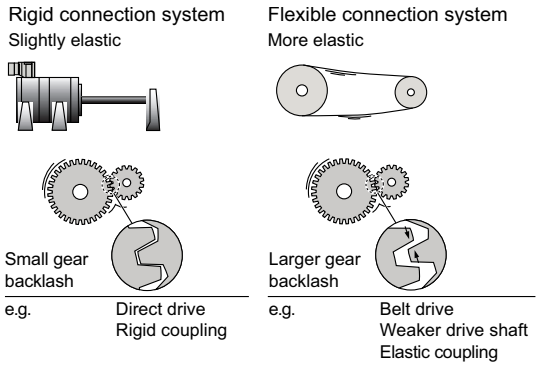

- If the load system has a rigid coupling:

  When the load inertia of the motor shaft end is constant, you can set the velocity controller P gain via the parameter P1-01 and the velocity controller integral action time via the parameter P1-02 according to the recommendations in the table below. Including:

  J_L: Load inertia of motor shaft end

  J_M: Inertia of motor rotor

-	$J_L = J_M$		$J_L = 5*J_M$		$J_L = 10*J_M$	
J_L	**P1-01**	**P1-02**	**P1-01**	**P1-02**	**P1-01**	**P1-02**
1 $kgcm^2$	0.0125	8	0.008	12	0.007	16
2 $kgcm^2$	0.0250	8	0.015	12	0.014	16
5 $kgcm^2$	0.0625	8	0.038	12	0.034	16
10 $kgcm^2$	0.125	8	0.075	12	0.069	16
20 $kgcm^2$	0.250	8	0.150	12	0.138	16

- If the load system has a flexible coupling:

  With regard to the optimization logics of the system with flexible coupling, a velocity loop gain that ensures the fastest the velocity adjustment and does not cause velocity overshoot will be discovered. See the following steps to set the control loop parameters:

  1. Set the P1-02 velocity loop integral parameter to the maximum of 327.67ms.

     When an external force is applied to the motor at a standstill, the velocity controller integral action time value should be reduced if an unintended movement occurs to the movement (for example, the vertical axes). However, reduction of the velocity controller integral action time value can also adversely affect the optimization of the control loop performance.

     ⚠ WARNING

     UNINTENDED MOVEMENT

     - Start the system only if there is no person or obstruction in the zone of operation.
     - Verify that the velocity value and time value do not exceed the available range of motion.
     - Verify that a functioning emergency stop push-button is within reach of all persons working on the machine.

     Failure to follow these instructions can result in death, serious injury, or equipment damage.

  2. Trigger a step command; for example, you can use the Profile Velocity function of SoMove software to set a velocity movement. At the same time, the oscilloscope function of SoMove software is used to observe the command current and actual velocity of the actual movement.
  3. After the first step movement, verify the maximum value of the command current. Modify the target velocity of the step command so that the maximum value of the command current is as close as possible to the maximum current of the drive. The command current value of the step command must not be too low, otherwise the friction of the mechanical system will dominate the motion effect.
  4. Trigger the step movement again after modifying the target velocity and verify the commanded current value via the oscilloscope.
  5. Slowly increase or decrease the P1-01 velocity controller P gain so that the actual velocity can reach the command velocity as soon as possible. The following figure shows the step response when the velocity loop gain is too large, and the ideal response when the velocity loop gain is reduced. The difference between the actual velocity and the commanded velocity in steady state is derived from the velocity loop integral:

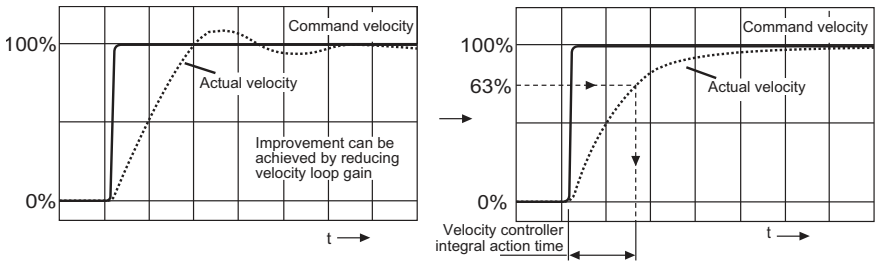

If some load systems start to generate vibration before reaching periodic resonance, it is necessary to minimize the velocity loop gain to eliminate the vibration. This situation is more common in the toothed synchronous belt structure.

- Find out the point where the velocity value is 63% of the highest value:

  Find out the point on the velocity curve where the velocity value is 63% of the highest value, and then the value of this point obtained on the time axis is the P1-02 velocity controller integral action time.

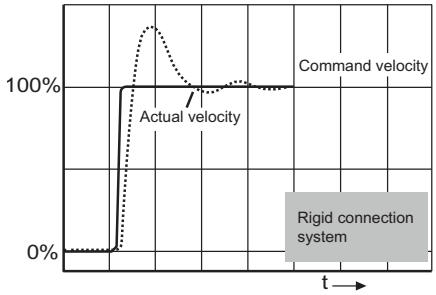

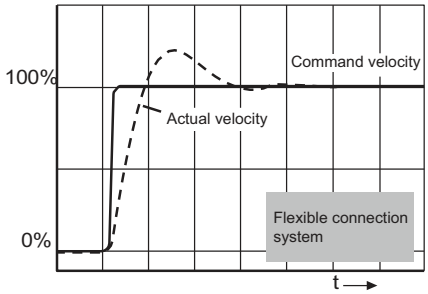

- Verify and further optimize the velocity controller P gain:

  For a properly optimized velocity loop, the step response curve of the velocity loop should have the following characteristics:

  1. Fast transient response
  2. The maximum overshoot value does not exceed 20%

- If the response curve of the actual system does not match the ideal curve shown in the figure below, try to change the P1-01 velocity controller P gain by 10% each time and trigger the step movement again:

  1. 1. If the response is too slow, try to increase the P1-01 velocity controller P gain.
  2. 2. If the response is accompanied by more vibrations, try to decrease the P1-01 velocity controller P gain.

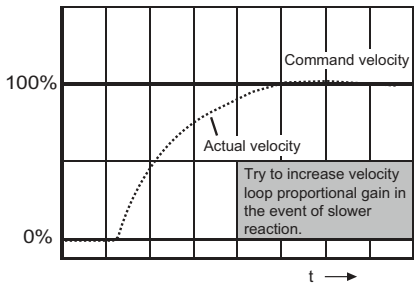

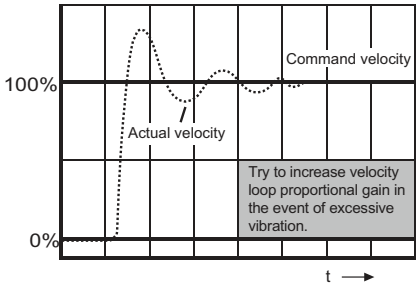

Optimization of Position Loop

An optimized velocity loop is a prerequisite for the optimization of position loop. The optimization of position loop mainly involves the adjustment of position controller P gain via the parameter P1-00:

- • If the P1-00 position controller P gain is too large, overshoot will occur and the system will become unstable
- • If the P1-00 position controller P gain is too small, the following error will be too large

Parameter used for optimization of position loop in Control parameter set 1:

- P1-00** Control parameter set 1: Position controller P gain.

P1-00	Control parameter set 1 Position controller P gain.	Minimum value	20	Unit	Related control mode		
		Factory setting	650	0.1 1/s	P	–	–
		Maximum value	9000		MS	S	–
Parameter function:			MODBUS address: 4614				
Control parameter set 1 Position controller P gain. In increments of 1 0.1 1/s **Modified settings become active immediately.**							

Parameter used for optimization of position loop in Control parameter set 2:

- P1-07** Control parameter set 2: Position controller P gain.

P1-07	Control parameter set 2: Position controller P gain.	Minimum value	20	Unit	Related control mode		
		Factory setting	650	0.1 1/s	P	–	–
		Maximum value	9000		MS	S	–
Parameter function:			MODBUS address: 4870				
Control parameter set 2: Position controller P gain. In increments of 1 0.1 1/s **Modified settings become active immediately.**							

Parameter used for optimization of position loop in Control parameter set 3:

- P1-14** Control parameter set 3: Position controller P gain.

P1-14	Control parameter set 3: Position controller P gain.	Minimum value	20	Unit	Related control mode		
		Factory setting	200	0.1 1/s	P	–	–
		Maximum value	9000		MS	S	–
Parameter function:			MODBUS address: 5126				
Control parameter set 3 Position controller P gain. In increments of 1 0.1 1/s **Modified settings become active immediately.**							

When optimizing the position loop, trigger an incremental movement; for example, use the Profile Position function of SoMove function to set an incremental

movement. At the same time, the oscilloscope function of SoMove software is used to observe the command position, actual position, actual velocity and command current of the actual movement.

NOTE: Note: Incremental movement will cause the motor to operate at a constant velocity until the movement is completed.

⚠ WARNING

UNINTENDED MOVEMENT

- Start the system only if there is no person or obstruction in the zone of operation.
- Verify that the velocity value and time value do not exceed the available range of motion.
- Verify that a functioning emergency stop push-button is within reach of all persons working on the machine.

Failure to follow these instructions can result in death, serious injury, or equipment damage.

After triggering an incremental movement, verify the command current and actual velocity; these two values should not exceed the maximum current and velocity current of the servo drive.

The ideal response curve of the load system with different characteristics is shown in the following figure:

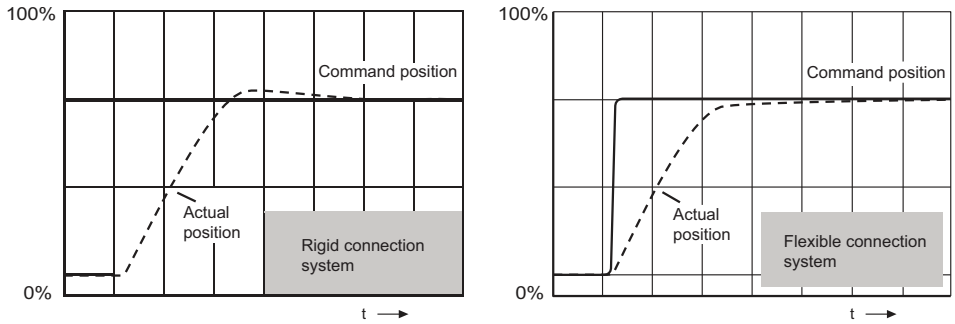

A properly optimized position controller P gain should enable the actual position to reach the command position quickly with no or only slight overshoot.

If the response curve of the actual system does not match the ideal curve shown in the figure above, try to change the controller P gain by 10% each time and trigger the step movement again:

- • If the control tends to oscillate, try to decrease the position controller P gain
- If the actual position reaches the command position too slowly, try to increase the position controller P gain

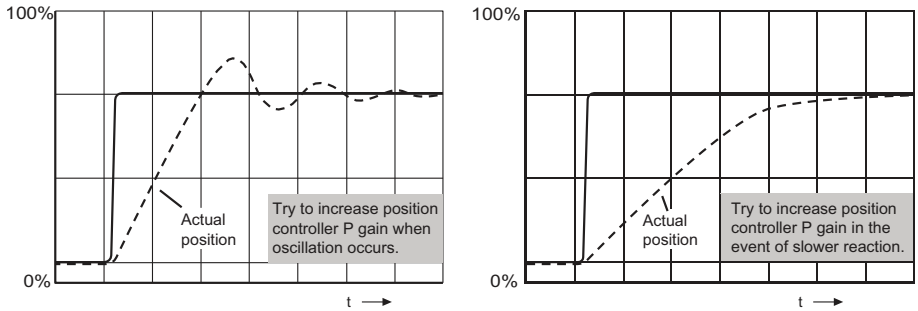

Stiffness Switching

Lexium18 The servo drive can be switched manually or automatically between different control loop gains to accommodate different system response requirements.

Switch control between control loop parameter sets 1 and 2

When the parameter P0-01 is set to “0/Invalid”, the servo drive uses a serial PID control loop model. There are three control loop parameter sets for the Lexium 18 servo drive:

- P1-00...P1-06: Control loop parameter set 1.
- P1-07...P1-13: Control loop parameter set 2.
- P1-14...P1-18: Control loop parameter set 3.

The control loop parameter set 1 and the control loop parameter set 2 are acting in motion, and the control loop parameter set 3 is acting in low-velocity operation and standstill state.

Set the conditions of switching between the control loop parameter 1 and the control loop parameter 2 via the related parameters.

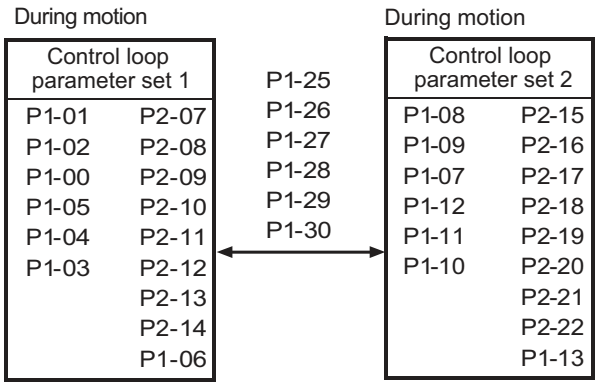

Set the default control loop parameter set during power-on via the parameter P1-33:

P1-33	**Selection of control loop parameter set at power up.**	**Minimum value**	**0**	**Unit**	**Related control mode**		
		Factory setting	**1**	**–**	**P**	**V / Vz**	**T / Tz**
		Maximum value	**2**		**MS**	**S**	**–**
Parameter function:			**MODBUS address: 4400**				

Selection of control loop parameter set at power up.

0 / Switching Condition: The switching condition is used for control loop parameter set switch.

1 / Control loop parameter set 1: Control loop parameter set 1 is used

2 / Control loop parameter set 2: Control loop parameter set 1 is used

Modified settings become active immediately.

The condition of switching between the control loop parameter set 1 and the control loop parameter set 2 is as follows:

- Switch between control loop parameter sets via input signal
- Switch between parameter sets when the position error is below the set threshold
- Switch between parameter sets when the target velocity is lower than the set threshold
- Switch between parameter sets when the actual velocity is lower than the set threshold

You can select the methods of switching between control loop parameter sets via the parameter P1-34:

P1-34	Condition for switching of control parameter sets 1 and 2	Minimum value	0	Unit	Related control mode		
		Factory setting	0	–	P	V / Vz	T / Tz
		Maximum value	4		MS	S	–

Parameter function: **MODBUS address: 4404**

Condition for switching of control parameter sets 1 and 2

0 / None or digital input: None or digital input function selected

1 / Inside position deviation: Inside position deviation (value definition in parameter CLSET_p_DiffWin)

2 / Below Reference Velocity: Below reference velocity (value definition in parameter CLSET_v_Threshol)

3 / Below Actual velocity: Below actual velocity (value definition in parameter CLSET_v_Threshol)

4 / Reserved: Reserved

In the case of parameter set switching, the values of the following parameters are changed gradually:

P1-00 / P1-07

P1-01 / P1-08

P1-02 / P1-09

P1-03 / P1-10

P1-04 / P1-11

P1-05 / P1-12

The following parameters are changed immediately after the time for parameter set switching (CTRL_ParChgTime):

P2-07 / P2-15

P2-08 / P2-16

P2-09 / P2-17

P2-10 / P2-18

P2-11 / P2-19

P2-12 / P2-20

P2-13 / P2-21

P2-14 / P2-22

P1-06 / P1-13

Modified settings become active immediately.

When position error or velocity threshold is taken as the criteria to switch between control loop parameter sets, you can set the position error threshold, velocity threshold and monitoring window time via the parameter P1-35 / P1-36 / P1-37:

P1-35	Time window switching of control parameter sets 1 and 2	Minimum value	0	Unit	Related control mode		
		Factory setting	0	1 ms	P	V / Vz	T / Tz
		Maximum value	1000		MS	S	–

Parameter function: **MODBUS address: 4406**

Time window switching of control parameter sets 1 and 2

Value = 0: Window monitoring deactivated.

Value > 0: Window time for the parameter P1-36 and P1-37.

Modified settings become active immediately.

P1-36	Position deviation for switching of control parameter sets 1 and 2	Minimum value	0	Unit	Related control mode		
		Factory setting	1310	usr_p	P	–	–
		Maximum value	2147483647		MS	S	–

Parameter function: **MODBUS address: 4426**

Position deviation for switching of control parameter sets 1 and 2

If the position deviation of the position controller is less than the value of this parameter when the switching condition set via the parameter P1-34 is [1/Inside Position Deviation], control loop parameter set 2 is used. Otherwise, control loop parameter set 1 is used.

Modified settings become active immediately.

P1-37	Velocity threshold for switching of control parameter sets 1 and 2	Minimum value	0	Unit	Related control mode		
		Factory setting	50	usr_v	P	–	–
		Maximum value	2147483647		MS	S	–

Parameter function: **MODBUS address: 4410**

Velocity threshold for switching of control parameter sets 1 and 2

If the reference velocity is less than the value of this parameter when the switching condition set via the parameter P1-34 is [2 / Below Reference Velocity], control loop parameter set 2 is used. Otherwise, control loop parameter set 1 is used.

If the actual velocity is less than the value of this parameter when the switching condition set via the parameter P1-34 is [2 / Below Actual Velocity], control loop parameter set 2 is used. Otherwise, control loop parameter set 1 is used.

Modified settings become active immediately.

Some control loop parameters in the control loop parameter sets can be switched linearly and the switching time can be set via the parameter P1-38.

Other control loop parameters are switched to the values in another parameter set directly after the time set via the parameter P1-38 is reached. The figure below shows the sequence of switching between control loop parameter sets.

P1-38	Time for switching between control parameter sets 1 and 2	Minimum value	0	Unit	Related control mode		
		Factory setting	0	1 ms	P	V / Vz	T / Tz
		Maximum value	2000		MS	S	–
Parameter function:			**MODBUS address: 4392**				
Time for switching between control parameter sets 1 and 2 **Modified settings become active immediately.**							

Automatic Transition to Control Loop Parameter Set 3

When the parameter P0-01 is set to “0/Invalid”, the servo drive uses a serial PID control loop model. There are three control loop parameter sets for the Lexium 18 servo drive:

- P1-00...P1-06: Control loop parameter set 1.
- P1-07...P1-13: Control loop parameter set 2.
- P1-14...P1-18: Control loop parameter set 3.

Control loop parameter set 1 or control loop parameter set 2 is active when the servo motor is moving, while control loop parameter set 3 is active when the servo motor is in low-velocity operation or standstill state.

For details about the conditions, methods, and parameter settings of switching between control loop parameter set 1 and control loop parameter set 2, see **Switch control between control loop parameter sets 1 and 2**, page 352.

When the condition of motor velocity and position error is met, the servo motor will automatically switch from the currently active control loop parameter set 1 or control loop parameter set 2 to the control loop parameter set 3.

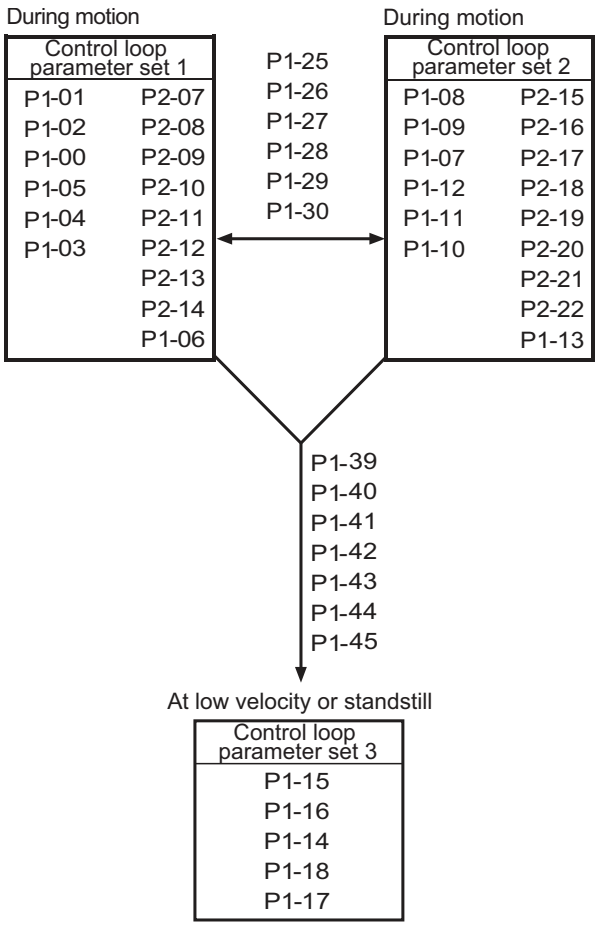

The judgment conditions for switching between control loop parameter sets are divided into position conditions and velocity position conditions:

- Judge and automatically switch between control loop parameter sets according to position conditions

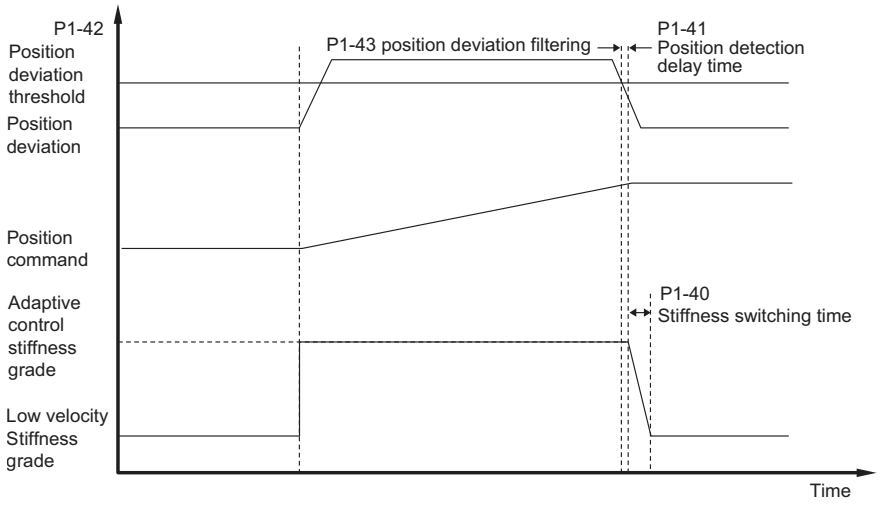

The position condition of switching between control loop parameter sets is met when the position error defined via the parameter P1-43 is less than the position error threshold defined via the parameter P1-42 after being filtered by filter and stably exceeds the time defined via the parameter P4-41 after the completion of the movement.

- Judge and automatically switch between control loop parameter sets according to velocity conditions

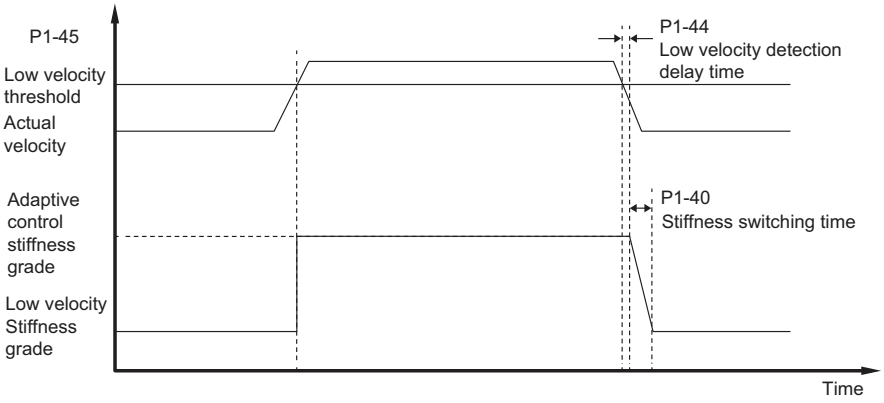

The velocity condition of switching between control loop parameter sets is met when the actual velocity is lower than the low velocity threshold defined via the parameter P1-45 and the stably exceeds the times defined via the parameter P1-44 after the completion of the movement.

P1-41	Adaptive stiffness switch: Position deviation delay	Minimum value	0	Unit	Related control mode		
		Factory setting	20	0.1 ms	P	–	–
		Maximum value	2000		MS	S	–

Parameter function: **MODBUS address: 4454**

Adaptive stiffness switching: Position deviation delay

The condition of adaptive stiffness switching position deviation is met when the motion command is completed (electronic gear or internal motion), and the position deviation is lower than the position deviation threshold set via the parameter P1-42 and exceeds the time set via this parameter.

Modified settings become active immediately.

P1-42	Adaptive stiffness switch: Position deviation threshold	Minimum value	2	Unit	Related control mode		
		Factory setting	50	0.1 deg	P	–	–
		Maximum value	100		MS	S	–

Parameter function: **MODBUS address: 4456**

Adaptive stiffness switching: Position deviation threshold

The condition of adaptive stiffness switching position deviation is met when the motion command is completed (electronic gear or internal motion), and the position deviation is lower than the position deviation threshold set via this parameter and exceeds the time set via parameter P1-42 .

In increments of 0.1 Arms.

Modified settings become active immediately.

P1-43	Adaptive stiffness switch: Time constant of position deviation filter	Minimum value	0	Unit	Related control mode		
		Factory setting	100	0.1 ms	P	–	–
		Maximum value	2000		MS	S	–

Parameter function: **MODBUS address: 4458**

Adaptive stiffness switching: Time constant of position deviation filter

In increments of 0.1 ms.

Modified settings become active immediately.

P1-44	Adaptive stiffness switch: Low velocity time	Minimum value	0	Unit	Related control mode		
		Factory setting	20	0.1 ms	P	V / Vz	–
		Maximum value	2000		MS	S	–

Parameter function: **MODBUS address: 4460**

Adaptive stiffness switching: Low velocity time

The adaptive stiffness switching velocity condition is met when the actual velocity is lower than the low velocity threshold set via the parameter P1-45 and exceeds the time set via this parameter.

In increments of 0.1 ms.

Modified settings become active immediately.

P1-45	Adaptive stiffness switch: Low velocity threshold	Minimum value	0	Unit	Related control mode		
		Factory setting	20	usr_v	P	V / Vz	–
		Maximum value	100		MS	S	–
Parameter function:			**MODBUS address: 4462**				

Adaptive stiffness switching: Low velocity threshold

The adaptive stiffness switching velocity condition is met when the actual velocity is lower than the low velocity threshold set via the parameter P1-44 and exceeds the time set via this parameter.

Modified settings become active immediately.

You can select the methods of switching between control loop parameter sets via the parameter P1-39:

- P1-39 = 0 / Dynamic Stiffness Switching Disable

  The servo driver disables the adaptive Stiffness Switching function.
- P1-39 = 1 / Dynamic Stiffness Switching Without Ramp

  The servo drive switches to the low control loop parameter set 3 immediately after the condition of adaptive stiffness switching is met.
- P1-39 = 2 / Dynamic Stiffness Switching Deep Sleep Mode

  The servo drive switches to control loop parameter set 3 immediately after the condition of adaptive stiffness switching is met and further switches the control loop parameter set to the half of the control loop parameter set 3 after a period of time.
- P1-39 = 3 / Dynamic Stiffness Switching With Ramp

  The servo drive switches to control loop parameter set 3 linearly within the time set via the parameter P1-40 after the condition of adaptive stiffness switching is met.

P1-39	Adaptive stiffness switch: Adaptive stiffness switching mode	Minimum value	0	Unit	Related control mode		
		Factory setting	0	–	P	V / Vz	T / Tz
		Maximum value	3		MS	S	–

Parameter function: **MODBUS address: 4450**

Adaptive stiffness switch: Adaptive stiffness switch mode

0 / Dynamic Stiffness Switching Disable

1 / Dynamic Stiffness Switching No Ramp

2 / Dynamic Stiffness Switching Deep Sleep Mode

3 / Dynamic Stiffness Switching With Ramp

When the parameter set via the parameter P0-01 is [0 / Invalid] and the adaptive stiffness switching conditions are met, the following parameters will be switched according to the mode set via this parameter:

P1-00 / P1-14

P1-01 / P1-15

P1-02 / P1-16

P1-05 / P1-18

When the parameter set via the parameter P0-01 is [1 / Standard, 2 / Passive or 3 / Adaptive], and the adaptive stiffness switching conditions are met, the following parameters will be switched according to the mode set via this parameter:

P0-02 / P1-47

When the parameter via this parameter is [2/Dynamic Stiffness Switching Deep Sleep Mode], and the control parameter set is switched to the control loop parameter set 3, the parameter will be further switched to half of value via control loop parameter set 3.

Modified settings become active immediately.

P1-40	Adaptive stiffness switch: Time of adaptive stiffness switching	Minimum value	0	Unit	Related control mode		
		Factory setting	0	0.1 ms	P	V / Vz	T / Tz
		Maximum value	2000		MS	S	–

Parameter function: **MODBUS address: 4452**

The control parameter set will be gradually switched within the time set via this parameter when the switching condition set via the parameter P1-39 is [3/Dynamic Stiffness Switching With Ramp] and the stiffness switching conditions are met.

In increments of 0.1 ms.

Modified settings become active immediately.

You can set the method of activating the judgment condition of switching between control loop parameter sets via the parameter P1-46:

- P1-46=0/Switch when both the position condition and velocity condition of adaptive stiffness switching are met

  Switch to the control loop parameter set 3 only when both the position condition and velocity condition are met in this switching mode.

- P1-46=1/Switch the position loop gain separately when the adaptive stiffness switching position condition is met, and switch the velocity loop gain separately when the adaptive stiffness switching velocity condition is met;

  In this switching mode, the position loop gain and velocity loop gain of the control loop parameter set can be switched separately. The position loop gain of control loop parameters will be switched to the position loop gain of the control loop parameter set 3 separately when the position condition of adaptive stiffness switching is met. The velocity loop gain of control loop parameters will be switched to the velocity loop gain of the control loop parameter set 3 separately when the velocity condition of adaptive stiffness switching is met.

P1-46	**Adaptive stiffness switch: Gain optimization mode at low velocity**	**Minimum value**	**0**	**Unit**	**Related control mode**		
		Factory setting	**0**	**–**	**P**	**V / Vz**	**–**
		Maximum value	**1**		**MS**	**S**	**–**
Parameter function:			**MODBUS address: 4466**				
Adaptive stiffness switching: Gain optimization mode at low velocity 0 / Position And Velocity: Switch when both the position condition and the velocity condition of adaptive stiffness switching are met. 1 / Position Or Velocity: Switch the position loop gain separately when the adaptive stiffness switching position condition is met, and switch the velocity loop gain separately when the adaptive stiffness switching velocity condition is met. **Modified settings become active immediately.**							

When receiving a motion command again, the control loop parameter set will be switched to the control loop parameter set 1 or control loop parameter set 2 immediately

Adaptive Control Loop Stiffness Switching

The servo drive uses an adaptive control loop model when the parameter P0-01 is set to “1/Standard”, “2/Passive” or “3/Adaptive”. Lexium18 servo drive has 2 adaptive control stiffness levels:

- P0-02 adaptive control stiffness level
- P1-47 Adaptive stiffness switching: Target low stiffness

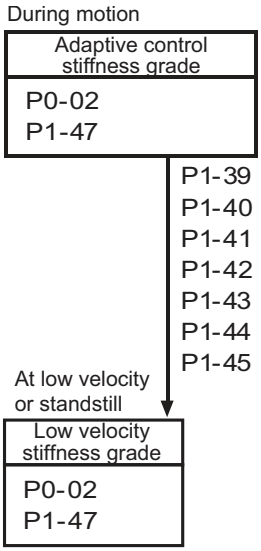

Both of these adaptive control stiffness level parameters automatically set the control loop parameters based on the adaptive control inertia ratio in parameter P0-03.

When the motor speed and position error conditions are met, the servo drive will automatically switch from adaptive control stiffness level in P0-02 to adaptive stiffness switching in P1-47: target low stiffness.

The judgment conditions for switching between control loop parameter sets are divided into position conditions and velocity position conditions:

- Judge and automatically switch between control loop parameter sets according to position conditions

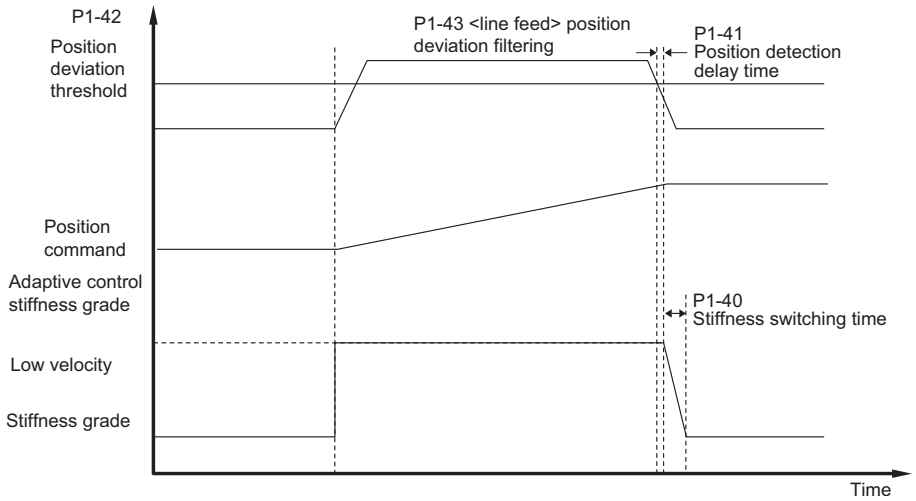

The position condition of switching between control loop parameter sets is met when the position error defined via the parameter P1-43 is less than the position error threshold defined via the parameter P1-42 after being filtered by filter and stably exceeds the time defined via the parameter P1-41 after the completion of the movement.

- Judge and automatically switch between control loop parameter sets according to velocity conditions

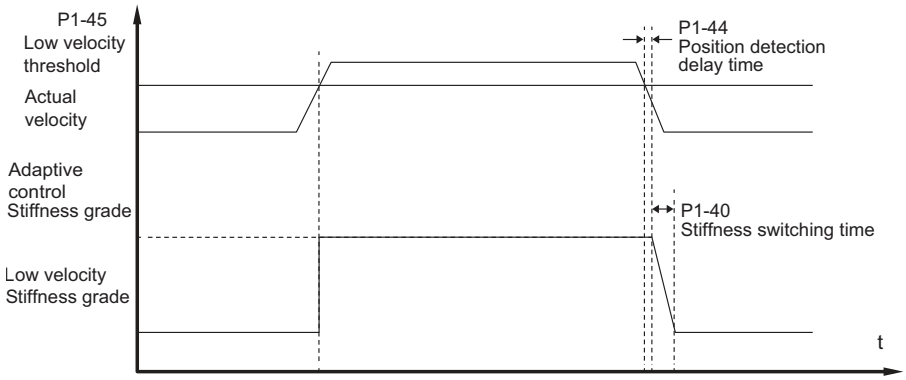

The velocity condition of switching between control loop parameter sets is met when the actual velocity is lower than the low velocity threshold defined via the parameter P1-45 and the stably exceeds the times defined via the parameter P1-44 after the completion of the movement.

Manual Gain Adjustment (Advanced)

Feed-forward adjustment

When the serial control loop is executing position control, the position loop is compared with the position feedback via the position loop input command to calculate the velocity loop input command necessary for the movement. The velocity loop feed-forward is added and superimposed on the velocity loop input via the velocity loop input command, thereby better reducing position errors and improving the system response

Besides, the torque command given by the velocity loop can also be additionally added via the acceleration feed-forward and then superimposed on the current loop input to improve the response of velocity control.

Lexium18 servo drive uses 2 feed-forward functions, including velocity loop feed-forward and acceleration feed-forward. There are 2 acceleration loop feed-forwards respectively held by each control loop parameter set. All control loop parameter sets share 1 acceleration feed-forward.

You can reduce the position error by increasing the gain of acceleration loop feed-forward, which is calculated as follows:

Following position error * position loop proportional gain = velocity command × (100% - velocity loop feed-forward gain)

If the gain of velocity loop feed-forward is set to 100%, the calculated following position error will be 0 but a great overshoot will occur during acceleration and deceleration.

In addition, increasing the gain of velocity loop feed-forward will increase the system noise. Under such condition, please increase P1-24 and P1-27 acceleration smoothing filter or P1-28 position command smoothing filter or decrease the velocity feed-forward gain.

P1-03	Control parameter set 1: Velocity feed-forward control.	Minimum value	0	Unit	Related control mode		
		Factory setting	550	0.1%	P	–	–
		Maximum value	2000		MS	S	–

Parameter function:	MODBUS address: 4620

Control parameter set 1 Velocity feed-forward control.

In increments of 0.1%.

In the ATT algorithm, the position loop tracking compensation coefficient is used. The larger the value, the smaller the Perr (tracking error), while maintaining the shape of the velocity curve.

When the value is sufficiently large, Perr (tracking error) = 0 can be achieved during the constant velocity phase.

Modified settings become active immediately.

P1-10	Control parameter set 2: Velocity feed-forward control.	Minimum value	0	Unit	Related control mode		
		Factory setting	550	0.1%	P	–	–
		Maximum value	2000		MS	S	–

Parameter function:	MODBUS address: 4876

Control parameter set 2 Velocity feed-forward control.

In increments of 0.1 %.

Modified settings become active immediately.

P1-23	Acceleration feed-forward control	Minimum value	0	Unit	Related control mode		
		Factory setting	0	0.1%	P	V / Vz	–
		Maximum value	30000		MS	S	–

Parameter function: **MODBUS address: 4372**

Acceleration feed-forward control

In increments of 0.1%.

Modified settings become active immediately.

P1-26	Position command averaging filter	Minimum value	0	Unit	Related control mode		
		Factory setting	1	–	P	–	–
		Maximum value	1		–	S	–

Parameter function: **MODBUS address: 9742**

0/ Disable: Disable the position command averaging filter.

1/ Enable: Enable the position command averaging filter

Setting can only be modified if power stage is disabled.

Modified settings become active the next time the motor moves.

P1-27	Time constant of position command averaging filter	Minimum value	0	Unit	Related control mode		
		Factory setting	0	1 ms	P	–	–
		Maximum value	128		MS	S	–

Parameter function: **MODBUS address: 1562**

Time constant of position command averaging filter

Modified settings become active immediately.

P1-28	Time constant of the position loop command low-pass filter	Minimum value	0	Unit	Related control mode		
		Factory setting	0	0.01 ms	P	–	–
		Maximum value	25600		MS	S	–

Parameter function: **MODBUS address: 4448**

Time constant of the position loop command low-pass filter

This parameter is active for both velocity loop feed-forward and acceleration feed-forward.

In increments of 0.01 ms.

Modified settings become active immediately.

Manual Mechanical Resonance Suppression

The resonance caused by the mechanical system will lead to the development of noise and disable the increase of the system gain settings. Noise and resonance can be reduced by suppressing the resonance point using notch filters, thereby further improving the system gain.

In addition to two groups of automatic notch filters, Lexium18 servo drive supports four groups of manual notch filters and each control loop parameter set supports two groups of manual notch filters. Due to different control loop parameters selected by the servo controller, two manual notch filters are active each time.

Param-eters	Designation	Current value	Factory setting	Minimum value	Maximum value
P2-00	RTATU_ ANotchMode	Enable 2	Invalid	–	–
P2-01	CTRL_ANf1damp	90%	90%	55%	99%
P2-02	CTRL_ANf1freq	210.9 Hz	1500 Hz	50 Hz	1500 Hz
P2-03	CTRL_ANf1bandw	70%	70%	1%	90%
P2-04	CTRL_ANf2damp	90%	90%	55%	99%
P2-05	CTRL_ANf2freq	156.2 Hz	1500 Hz	50 Hz	1500 Hz
P2-06	CTRL_ANf2bandw	70%	70%	1%	90%
P2-07	CTRL1_Nf1damp	60%	90%	55%	99%
P2-08	CTRL1_Nf1freq	546.8 Hz	1500 Hz	50 Hz	1500 Hz
P2-09	CTRL1_Nf1bandw	70%	70%	1%	90%
P2-10	CTRL_Nf2damp	90%	90%	55%	99%
P2-11	CTRL1_Nf2freq	531.2 Hz	1500 Hz	50 Hz	1500 Hz

Application Skills - How to realize the online resonance detection for more than two resonance points?

- Use two automatic notch filters to capture two resonance points online and fill them into the manual notch filter;
- Reset the automatic notch filter and proceed with online detection of resonance points

The parameters of each manual notch filter, such frequency, bandwidth and damping, can be manually adjusted.

CTRL1 / Control loop parameter set 1		CTRL2 / Control loop parameter set 2	
P2-07	Control parameter set 1: Notch filter 1: Damping	P2-15	Control parameter set 2: Notch filter 1: Damping.
P2-08	Control parameter set 1: Notch filter 1: Frequency	P2-16	Control parameter set 2: Notch filter 1: Frequency.
P2-09	Control parameter set 1: Notch filter 1: Bandwidth	P2-17	Control parameter set 2: Notch filter 1: Bandwidth.
P2-10	Control parameter set 1: Notch filter 2: Damping.	P2-18	Control parameter set 2: Notch filter 2: Damping
P2-11	Control parameter set 1: Notch filter 2: Frequency.	P2-19	Control parameter set 2: Notch filter 2: Frequency
P2-12	Control parameter set 1: Notch filter 2: Bandwidth.	P2-20	Control parameter set 2: Notch filter 2: Bandwidth

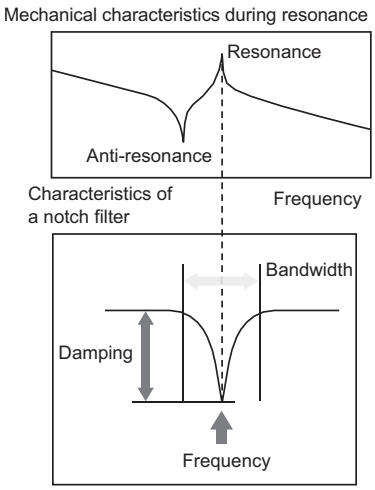

You need to find out the resonance frequency point of the machine when setting the manual notch filter. It is recommended to find out the resonance frequency point via the oscilloscope function of SoMove software:

- Enable the oscilloscope function of SoMove software and add the actual velocity to the monitoring function.
- Set the sampling cycle of the oscilloscope. According to the law of sampling, the sampling cycle of oscilloscope affects the highest value of the frequency domain. The sampling cycle should be set to a lower value while measuring a high frequency domain and to a higher value when measuring a low frequency domain
- Drive the servo motor using the test run function of the host motion controller or servo drive, perform FFT conversion to the actual velocity and try to find out the resonance frequency point.
- Gradually increase the P1-01 velocity loop proportional gain or gradually increase the P0-02 adaptive control stiffness level, repeat the measurement of actual velocity, perform FFT conversion and try to find out the resonance frequency point.
- After finding out the resonance frequency point, try to fill the frequency value of the resonance frequency point into the manual notch filter frequency, and set the filter bandwidth and damping. Drive the motor again and observe whether the mechanical resonance is suppressed.
- If the damping coefficient (d1) and bandwidth (b1) are larger, the effect of center frequency suppression will be better. However, the control phase may change faster, resulting in an instable control.

Key Parameters - Influence of Damping Coefficient

Center frequency: fn = 300Hz, damping coefficient: d1 = 0.55, 0.7, 0.9 and 0.99, bandwidth: b1 = 0.7

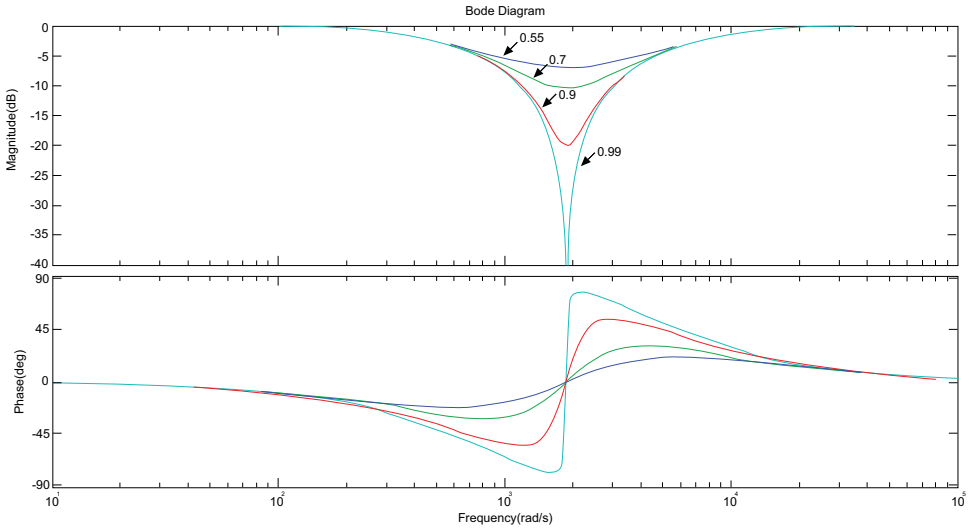

Key Parameters - Influence of Bandwidth

Center frequency: fn = 300Hz, damping coefficient: d1 = 0.7, bandwidth: b1 = 0.1, 0.5, 0.7 and 0.9

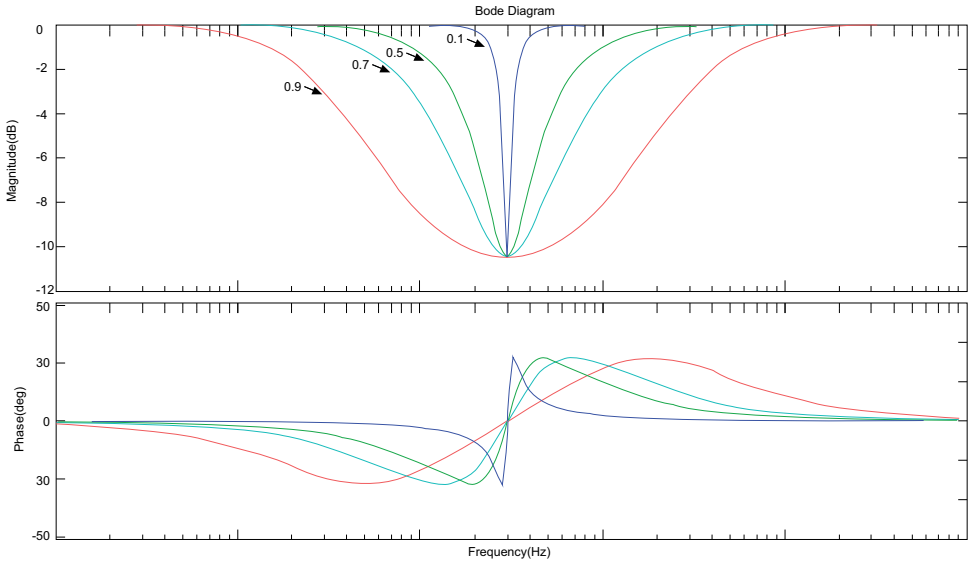

P2-07	Control parameter set 1: Notch filter 1: Damping.	Minimum value	550	Unit	Related control mode		
		Factory setting	900	0.1%	P	V / Vz	T / Tz
		Maximum value	990		MS	S	–
Parameter function:			**MODBUS address: 4624**				
Control parameter set 1: Notch filter 1: Damping In increments of 0.1%. **Modified settings become active immediately.**							

P2-08	Control parameter set 1: Notch filter 1: Frequency	Minimum value	500	Unit	Related control mode		
		Factory setting	15000	0.1 Hz	P	V / Vz	T / Tz
		Maximum value	15000		MS	S	–

Parameter function: **MODBUS address: 4626**

Control parameter set 1: Notch filter 1: Frequency

In increments of 0.1 Hz.

Modified settings become active immediately.

P2-09	Control parameter set 1: Notch filter 1: Bandwidth	Minimum value	10	Unit	Related control mode		
		Factory setting	700	0.1%	P	V / Vz	T / Tz
		Maximum value	900		MS	S	–

Parameter function: **MODBUS address: 4628**

Control parameter set 1: Notch filter 1: Bandwidth

In increments of 0.1%.

Modified settings become active immediately.

P2-10	Control parameter set 1: Notch filter 2: Damping	Minimum value	550	Unit	Related control mode		
		Factory setting	900	0.1%	P	V / Vz	T / Tz
		Maximum value	990		MS	S	–

Parameter function: **MODBUS address: 4630**

Control parameter set 1: Notch filter 2: Damping.

In increments of 0.1%.

Modified settings become active immediately.

P2-11	Control parameter set 1: Notch filter 2: Frequency	Minimum value	500	Unit	Related control mode		
		Factory setting	15000	0.1 Hz	P	V / Vz	T / Tz
		Maximum value	15000		MS	S	–

Parameter function: **MODBUS address: 4632**

Control parameter set 1: Notch filter 2: Frequency.

In increments of 0.1 Hz.

Modified settings become active immediately.

P2-12	Control parameter set 1: Notch filter 2: Bandwidth	Minimum value	10	Unit	Related control mode		
		Factory setting	700	0.1%	P	V / Vz	T / Tz
		Maximum value	900		MS	S	–

Parameter function: **MODBUS address: 4634**

Control parameter set 1: Notch filter 2: Bandwidth.

In increments of 0.1%.

Modified settings become active immediately.

P2-15	Control parameter set 2: Notch filter 1: Damping	Minimum value	550	Unit	Related control mode		
		Factory setting	900	0.1%	P	V / Vz	T / Tz
		Maximum value	990		MS	S	–

Parameter function: **MODBUS address: 4880**

Control parameter set 2: Notch filter 1: Damping.

In increments of 0.1%.

Modified settings become active immediately.

P2-16	Control parameter set 2: Notch filter 1: Frequency	Minimum value	500	Unit	Related control mode		
		Factory setting	15000	0.1 Hz	P	V / Vz	T / Tz
		Maximum value	15000		MS	S	–

Parameter function: **MODBUS address: 4882**

Control parameter set 2: Notch filter 1: Frequency.

In increments of 0.1 Hz.

Modified settings become active immediately.

P2-17	Control parameter set 2: Notch filter 1: Bandwidth	Minimum value	10	Unit	Related control mode		
		Factory setting	700	0.1%	P	V / Vz	T / Tz
		Maximum value	900		MS	S	–

Parameter function: **MODBUS address: 4884**

Control parameter set 2: Notch filter 1: Bandwidth.

In increments of 0.1%.

Modified settings become active immediately.

P2-18	Control parameter set 2: Notch filter 2: Damping	Minimum value	550	Unit	Related control mode		
		Factory setting	900	0.1%	P	V / Vz	T / Tz
		Maximum value	990		MS	S	–

Parameter function: **MODBUS address: 4886**

Control parameter set 2: Notch filter 2: Damping

In increments of 0.1%.

Modified settings become active immediately.

P2-19	Control parameter set 2: Notch filter 2: Frequency	Minimum value	500	Unit	Related control mode		
		Factory setting	15000	0.1 Hz	P	V / Vz	T / Tz
		Maximum value	15000		MS	S	–

Parameter function: **MODBUS address: 4888**

Control parameter set 2: Notch filter 2: Frequency

In increments of 0.1 Hz.

Modified settings become active immediately.

P2-20	Control parameter set 2: Notch filter 2: Bandwidth	Minimum value	10	Unit	Related control mode		
		Factory setting	700	0.1%	P	V / Vz	T / Tz
		Maximum value	900		MS	S	–

Parameter function:	MODBUS address: 4890
Control parameter set 2: Notch filter 2: Bandwidth In increments of 0.1%. **Modified settings become active immediately.**	

End vibration suppression

To mitigate the oscillation of a long rod-shaped load during start and stop operations, vibration damping filters can be applied by setting to eliminate the same frequency components in the position command, effectively suppressing the vibrations.

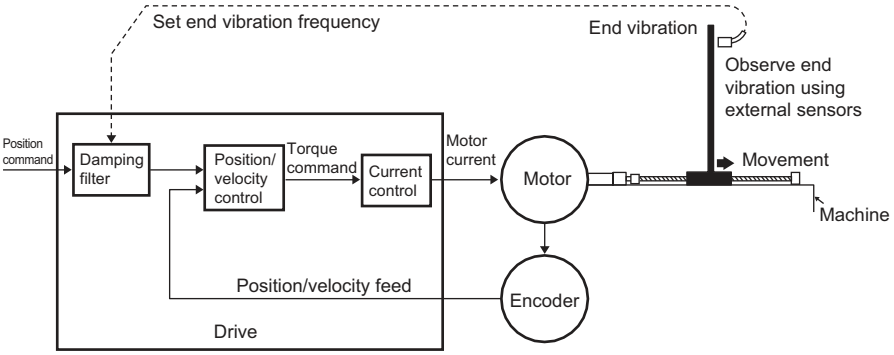

Lexium18 servo drive supports 2 groups of vibration suppression filters:

P2-26	Suppression filter 1: Frequency	Minimum value	0	Unit	Related control mode		
		Factory setting	0	0.1 Hz	P	V / Vz	T / Tz
		Maximum value	2000		MS	S	–

Parameter function: **MODBUS address: 4440**

Suppression filter 1: Frequency

In increments of 0.1 Hz.

Modified settings become active immediately.

P2-27	Suppression filter 1: Damping	Minimum value	0	Unit	Related control mode		
		Factory setting	300	0.1%	P	V / Vz	T / Tz
		Maximum value	500		MS	S	–

Parameter function: **MODBUS address: 4444**

Suppression filter 1: Damping

In increments of 0.1%.

Modified settings become active immediately.

P2-28	Suppression filter 2: Frequency	Minimum value	0	Unit	Related control mode		
		Factory setting	0	0.1 Hz	P	V / Vz	T / Tz
		Maximum value	2000		MS	S	–

Parameter function: **MODBUS address: 4442**

Suppression filter 2: Frequency

In increments of 0.1 Hz.

Modified settings become active immediately.

P2-29	Suppression filter 2: Damping	Minimum value	0	Unit	Related control mode		
		Factory setting	300	0.1%	P	V / Vz	T / Tz
		Maximum value	500		MS	S	–
Parameter function:			**MODBUS address: 4446**				
Suppression filter 2: Damping In increments of 0.1%. **Modified settings become active immediately.**							

The end vibration suppression function may not work optimally in the following situations:

- Vibration caused by factors outside of the command, such as external forces.
- Vibration frequencies outside the range of 1 to 200Hz.

When using the vibration damping filter, first measure the end vibration frequency of the long rod-shaped load using an external device. Then, input the obtained vibration frequency into the frequency parameter of the vibration damping filter and adjust the damping setting. If an external measurement device is not available, you can also utilize the oscilloscope feature of the SoMove software to measure the residual vibration frequency of the position deviation after the motion is completed. Then, make the necessary adjustments accordingly.

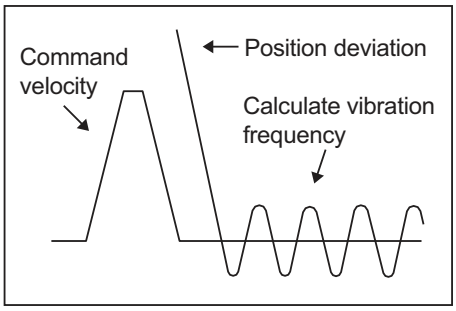

Diagnosis

Fault reset via HMI

Acquisition of operation state

You can obtain the operation state via output point.

An overview is given in the table below:

Operation state	Signal output function	
	"No fault"	"Active"
1 Start	0	0
2 Not Ready To Switch On	0	0
3 Switch On Disabled	0	0
4 Ready To Switch On	1	0
5 Switched On	1	0
6 Operation Enabled	1	1
7 Quick Stop Active	0	0
8 Error Response Active	0	0
9 Fault	0	0

P3-24 ... P3-30	Function of the output point DQx	Minimum value	1	Unit	Related control mode		
		Factory setting	–	–	P	V / Vz	T / Tz
		Maximum value	131		MS	S	–

Parameter function: **MODBUS address: –**

Function of the output point DQx

Function name	Function description	Function value		Related control mode				
		Normally open	Normally closed	P	S	V / Vz	T / Tz	MS
No Error	Driver has no fault	2	102	√	√	√	√	√
Active	Driver is enabled	3	103	√	√	√	√	√

Setting can only be modified if power stage is disabled.

Modified settings become active the next time the product is powered on.

Obtaining Current Warning Message

When a warning class 0 occurs in the servo drive, the content displayed on the HMI will start flashing as a reminder, and the motion of the servo motor will not be interrupted.

When a warning occurs, users can access the current warning message using the following two methods:

- Press and hold the S key for more than 2.5 seconds, and the HMI will display the current warning with an error class of 0.
- Show the current warning of error class 0 via the parameter **MON > ErrM > LWrn**. See Displaying the Drive's Current/Historical Fault Records, page 149.

For specific error code information, see Error Code List, page 386.

Step	Current display content on the panel	Key used	Operation
0	run	M S	Click the S key and the panel displays OP.
1	oP	M S	Click the S key and the panel displays MON.
2	Mon	M S	Click the S key and the panel displays SuPV.
3	SuPV	M S	Click the Page Up or Page Down key to select the drive status information till the panel displays ErrM.
4	ErrM	M S	Click the S key to go to the fault record parameter set.
5	LArM	M S	Click the S key and the panel displays the content of the drive's current warning.
6	3206	–	–

The user can also obtain the current warning content of error class 0 via the error record function of SoMove software:

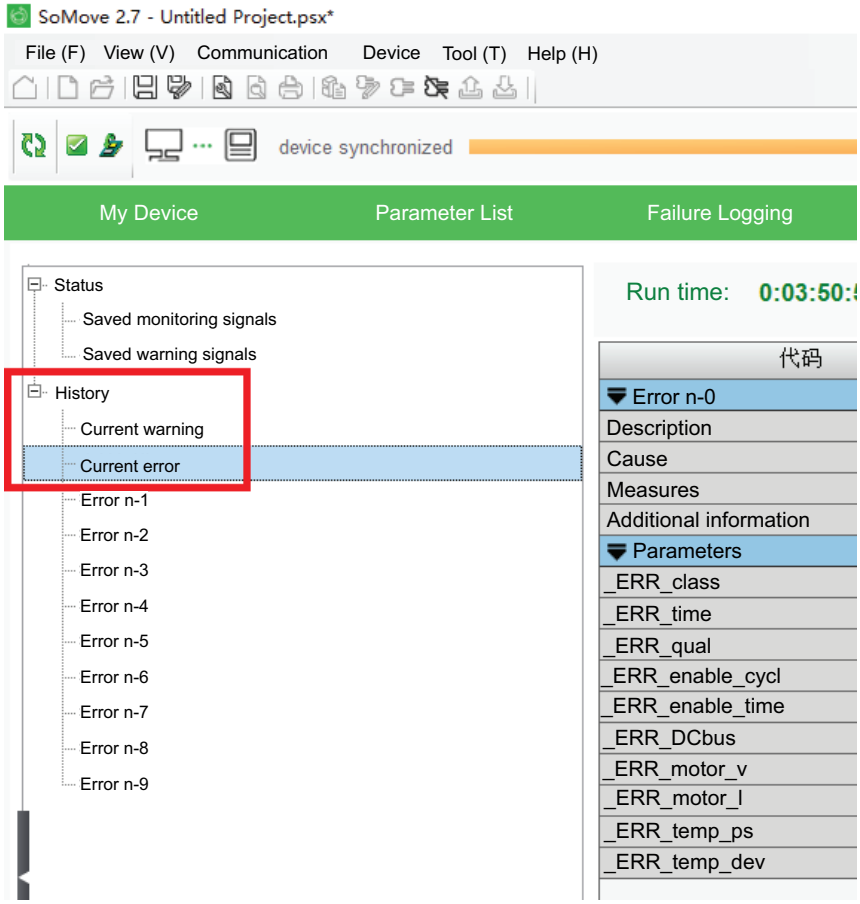
SoMove 2.7 - Untitled Project.psx*
File (F) View (V) Communication Device Tool (T) Help (H)
device synchronized
My Device
Parameter List
Failure Logging
Status
Saved monitoring signals
Saved warning signals
History
Current warning
Current error
Error n-1
Error n-2
Error n-3
Error n-4
Error n-5
Error n-6
Error n-7
Error n-8
Error n-9
Run time: 0:03:50:
代码
Error n-0
Description
Cause
Measures
Additional information
Parameters
_ERR_class
_ERR_time
_ERR_qual
_ERR_enable_cycl
_ERR_enable_time
_ERR_DCbus
_ERR_motor_v
_ERR_motor_I
_ERR_temp_ps
_ERR_temp_dev

Obtaining Current Error Message

When an error class 1 occurs in the servo drive, the HMI will display "Stop".

When an error class 2...4 occurs in the servo drive, the HMI will alternately display "Flt" and the error code.

The user can display the current error of error class 1...4 via the parameter **MON > ErrM > LFlt**.

For specific error code information, see Error Code List, page 386.

Step	Current display content on the panel	Key used	Operation
0	FLt	M	Click the M key and the panel displays OP.
1	oP	S	Click the S key and the panel displays MON.
2	Mon	S	Click the S key and the panel displays SuPV.
3	SuPU	Up, Down	Click the Page Up or Page Down key to select the drive status information till the panel displays ErrM.
4	ErrM	S	Click the S key to go to the fault record parameter set.
5	LArM	Up, Down	Click the Up and Down button to select the current error record of the drive.
6	LFLt	S	Click the S key and the panel displays the content of the drive's current error records.
7	A320	–	–

The user can also obtain the current error content of error class 1...4 via the error record function of SoMove software:

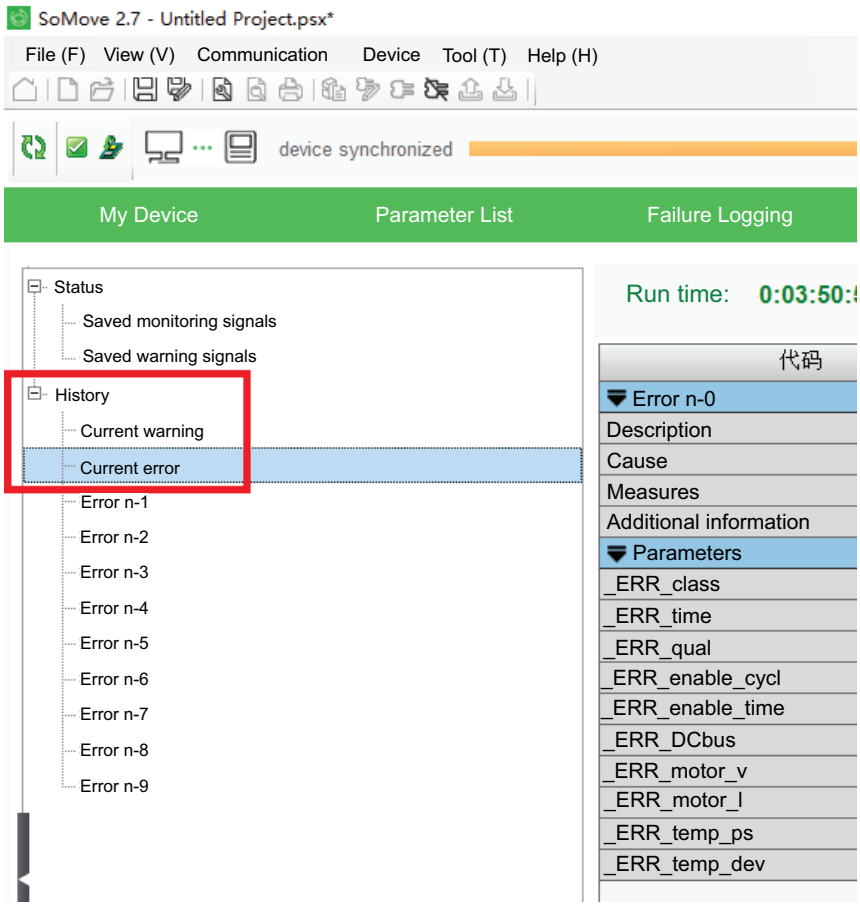

Obtaining Historical Error Records

Users can run the parameter **MON > ErrM > FItn** to display a historical error that a fault level displayed dynamically in the order of the occurrence of the fault is 1...4. Up to the first 9 historical errors are recorded, and the historical errors with higher n-number appear earlier. Refer to Displaying the Drive's Current/Historical Fault Records, page 149 for details.

For specific error code information, see Error Code List, page 386.

Step	Current display content on the panel	Key used	Operation
0	rdY	M S	Click the S key and the panel displays OP.
1	oP	M S	Click the S key and the panel displays MON.
2	Mon	M S	Click the S key and the panel displays SuPV.
3	SuPV	M ▲ ▼ S	Click the Page Up or Page Down key to select the drive status information till the panel displays ErrM.
4	ErrM	M S	Click the S key to go to the fault record parameter set.
5	LArM	M ▲ ▼ S	Click the Up and Down button to select the historical error record of the drive.
6	FLt1 FLt2 FLt9	M S	Click the S key and the panel displays the content of the drive's selected historical error records.
7	A320	–	–

The user can also obtain the historical error contents of error class 1...4 via the error record function of SoMove software, and the specific information will be listed in the historical error content at the same time.

The drive dynamically stores fault information according to the sequence of fault occurrence. When the recorded fault information exceeds 1 hour, the historical fault information will be recorded in the error n-1...n-9 according to the sequence of occurrence.

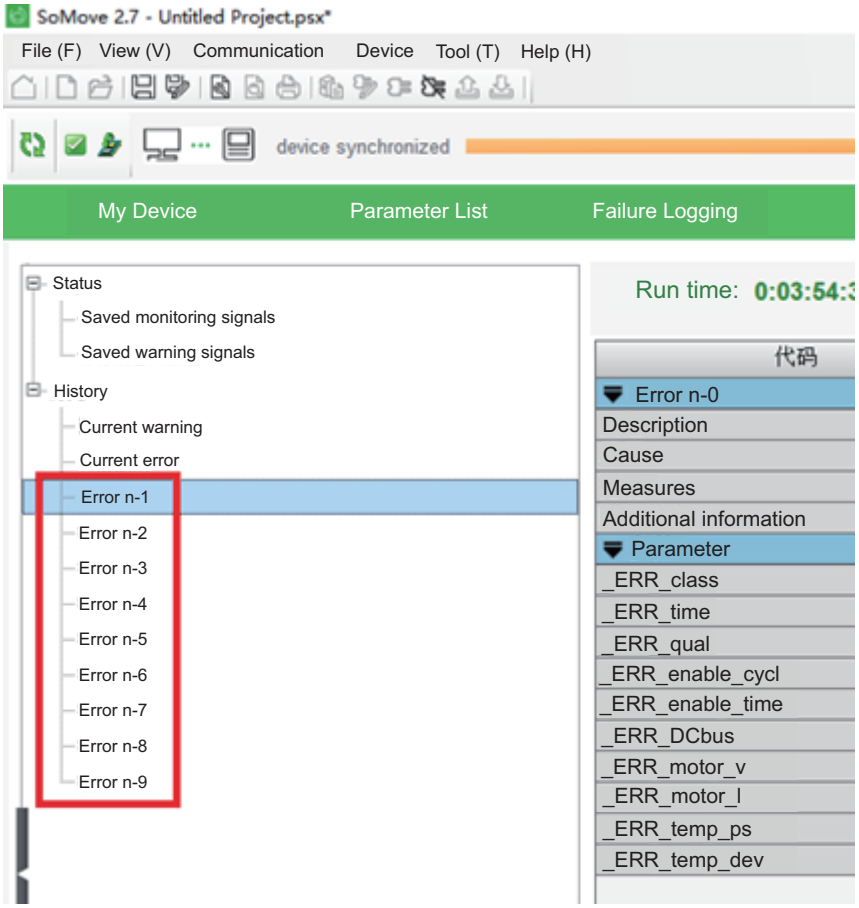
SoMove 2.7 - Untitled Project.psx*
File (F) View (V) Communication Device Tool (T) Help (H)
device synchronized
My Device
Parameter List
Failure Logging
Status
Saved monitoring signals
Saved warning signals
History
Current warning
Current error
Error n-1
Error n-2
Error n-3
Error n-4
Error n-5
Error n-6
Error n-7
Error n-8
Error n-9
Run time: 0:03:54:3
代码
Error n-0
Description
Cause
Measures
Additional information
Parameter
_ERR_class
_ERR_time
_ERR_qual
_ERR_enable_cycl
_ERR_enable_time
_ERR_DCbus
_ERR_motor_v
_ERR_motor_l
_ERR_temp_ps
_ERR_temp_dev

Diagnosis via Output Point

Acquisition of operation state

You can obtain the operation state via output point.

An overview is given in the table below:

Operation state	Signal output function	
	"No fault"	"Active"
1 Start	0	0
2 Not Ready To Switch On	0	0
3 Switch On Disabled	0	0
4 Ready To Switch On	1	0
5 Switched On	1	0
6 Operation Enabled	1	1
7 Quick Stop Active	0	0
8 Error Response Active	0	0
9 Error	0	0

P3-24 ... P3-30	Function of the output point DQx	Minimum value	1	Unit	Related control mode		
		Factory setting	–	–	P	V / Vz	T / Tz
		Maximum value	131		MS	S	–

Parameter function:

MODBUS address: –

Function of the output point DQx

Function name	Function description	Function value		Related control mode				
		Normally open	Normally closed	P	S	V / Vz	T / Tz	MS
No Error	Driver has no fault	2	102	√	√	√	√	√
Active	Driver is enabled	3	103	√	√	√	√	√

Setting can only be modified if power stage is disabled.

Modified settings become active the next time the product is powered on.

Acquisition of Fault State

The fault state can be obtained via output point.

If you need to obtain fault information via output point, you can assign the Selected Error or Selected Warning function to one output terminal by setting the parameters of P3-24...P3-30.

You can also specify an error number of error class 1...4 via the parameter P6-07 and P6-08. When this fault appears, it will be defined as an output of the output point for the Selected Error function.

A warning number of error class 0 is specified via the parameter P6-09 and P6-10. When this fault appears, it will be defined as an output of the output point for the Selected Warning function.

For the fault numbers that can be set, seeError Code List, page 386.

P3-24 ... P3-30	Function of the output point DQx	Minimum value	1	Unit	Related control mode		
		Factory setting	–	–	P	V / Vz	T / Tz
		Maximum value	131		MS	S	–

Parameter function: **MODBUS address: –**

Function of the output point DQx

Function name	Function description	Function value		Related control mode				
		Normally open	Normally closed	P	S	V / Vz	T / Tz	MS
Selected Error	There is one of the errors specified in Error Class 1...4	14	114	√	√	√	√	√
Selected Warning	There is one of the warnings specified in Error Class 0	16	116	√	√	√	√	√

Setting can only be modified if power stage is disabled.

Modified settings become active the next time the product is powered on.

P6-07	First error code	Minimum value	0	Unit	Related control mode		
		Factory setting	0	–	P	V / Vz	T / Tz
		Maximum value	65535		MS	S	–

Parameter function: **MODBUS address: 15116**

First error code

This parameter specifies the error code of an error of error classes 1 ... 4 which is to activate the signal output function.

Modified settings become active immediately.

P6-08	Signal output function Selected Error (error classes 1 to 4): Second error code.	Minimum value	0	Unit	Related control mode		
		Factory setting	0	–	P	V / Vz	T / Tz
		Maximum value	65535		MS	S	–

Parameter function: **MODBUS address: 15118**

Signal output function Selected Error (error classes 1 to 4): Second error code.

This parameter specifies the error code of an error of error classes 1 ... 4 which is to activate the signal output function.

Modified settings become active immediately.

P6-09	Signal output function Selected Warning (error class 0): First error code	Minimum value	0	Unit	Related control mode		
		Factory setting	0	–	P	V / Vz	T / Tz
		Maximum value	65535		MS	S	–
Parameter function:			MODBUS address: 15120				

Signal output function Selected Warning (error class 0): First error code

This parameter specifies the error code of an error of error class 0 which is to activate the signal output function.

Modified settings become active immediately.

P6-10	Signal output function Selected Warning (error class 0): Second error code	Minimum value	0	Unit	Related control mode		
		Factory setting	0	–	P	V / Vz	T / Tz
		Maximum value	65535		MS	S	–
Parameter function:			MODBUS address: 15122				

Signal output function Selected Warning (error class 0): Second error code

This parameter specifies the error code of an error of error class 0 which is to activate the signal output function.

Modified settings become active immediately.

Fault Reset Alarm

Fault reset via HMI

When a fault occurs, it can be reset via the following HMI operations:

Step	Current display content on the panel	Key used	Operation
0	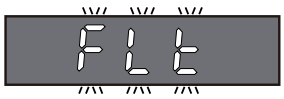		Click the S key and the panel displays FrES.
1			Click the S button to try to reset the fault. If the fault is successfully reset, the panel displays rdy
2		–	–

Fault reset via input terminal

When a fault occurs, it can be reset via the input terminal:

- The Fault Reset function can be assigned to an input terminal by setting the parameters of P3-00...P3-09.
- The current fault of the drive will be reset when there is an input on the input terminal assigned with Fault Reset function after the fault cause is confirmed

P3-00 ... P3-09	Function of the input point DIx	Minimum value	1	Unit	Related control mode		
		Factory setting	–	–	P	V / Vz	T / Tz
		Maximum value	150		MS	S	–

Parameter function: **MODBUS address: –**

Function of the input point DIx

Function name	Function description	Function value		Related control mode				
		Normally open	Normally closed	P	S	V / Vz	T / Tz	MS
Fault Reset	Fault reset	2	102	√	√	√	√	√

Setting can only be modified if power stage is disabled.

Modified settings become active the next time the product is powered on.

You can also attach a Fault Reset signal to the rising or falling edge of the input signal of the input terminal the Enable function is assigned to and try to reset the current fault via setting parameter P3-59.

P3-00 ... P3-09	Function of the input point DIx	Minimum value	1	Unit	Related control mode		
		Factory setting	–	–	P	V / Vz	T / Tz
		Maximum value	150		MS	S	–

Parameter function: **MODBUS address: –**

Function of the input point DIx

Function name	Function description	Function value		Related control mode				
		Normally open	Normally closed	P	S	V / Vz	T / Tz	MS
Enable	Driver is enabled	3	103	√	√	√	√	√

Setting can only be modified if power stage is disabled.

Modified settings become active the next time the product is powered on.

P3-59	Additional 'Fault Reset' for the signal input function 'Enable'.	Minimum value	0	Unit	Related control mode		
		Factory setting	0	–	P	V / Vz	T / Tz
		Maximum value	2		MS	S	–

Parameter function: **MODBUS address: 1384**

Additional 'Fault Reset' for the signal input function 'Enable'.

0 / Off /: No additional 'Fault Reset'.

1 / OnFallingEdge: Additional 'Fault Reset' with falling edge.

2 / OnRisingEdge: Additional 'Fault Reset' with rising edge.

Modified settings become active the next time the motor moves.

Error Message

Description of Error Message

If the monitoring function of the drive identifies an error, the drive will generate a error message. Each error message is identified by a an error code.

These error codes are divided into the following error classs:

Error class	State transition	Error response	Fault reset mode
0	–	This level of error will not interrupt the normal motor motion	• Fault reset via HMI • Fault reset via input terminal
1	T11	Cancel motion via “Quick Stop”	
2	T13, T14	Cancel the motion via “Quick Stop” and switch off the device enable after the motor stops motion	
3	T13, T14	Switch off the device enable immediately and the motor will not stop motion first	
4	T13, T14	Switch off the device enable immediately and the motor will not stop motion first	Restart the equipment

The following table shows the range of errors corresponding to specific error codes:

Error code	Error range
E 1xxx	General error
E 2xxx	Overcurrent error
E 3xxx	Voltage error
E 4xxx	Temperature error
E 5xxx	Hardware error
E 6xxx	Software error
E 7xxx	Interface and wiring error
E Axxx	Motor operation error
E Bxxx	Communication error
E Cxxx	S error
E Exxx	User-defined error in S mode
HMI displays incorrect characters.	Critical error

Error Code List

This chapter provides the following information for each error code:

- Error code
- Error class
- Error description
- Possible causes
- Recommended troubleshooting measures

E 1xxx: General error

Error code	Error class	Description	Causes	Troubleshooting measures
1100	0	Parameter exceeds the permissible range	The input value is beyond the permissible range of this parameter.	The input value must be within the permissible range.
1101	0	Parameter does not exist.	Parameter management system detected an error: the parameter (index) does not exist.	Please select another parameter (index).
1102	0	Parameter does not exist.	Parameter management system detected an error: the parameter (index) does not exist.	Please select another parameter (subindex).
1103	0	Not allowed to write this parameter (READ only)	Write access to the Read-Only parameter.	Write only writable parameters.
1104	0	Write access denied (no access authority)	Parameters can only be accessed in Expert mode.	Write access must be done by an expert.
1105	0	Block upload/download not initialized	–	–
1106	0	Command execution is not allowed when power stage is enabled	Command execution is not allowed (in the operating state of Operation Enabled or Quick Stop Active) when the power stage is enabled.	Disable the power stage and repeat the command execution.
1107	0	Prohibit the access to other interfaces	Access is occupied by other channels (for example, the commissioning software is enabled and access attempts are made via fieldbus).	Check for channels that block access.
1108	0	File cannot be uploaded: Incorrect file ID	–	–
1109	1	Invalid data saved after power failure	–	–
110A	0	System error detected: No Bootloader available	–	–
110B	3	Detected an error while downloading configuration (Auxiliary information = Modbus register address)	Detected an error while checking parameters (for example, the given velocity in the operating mode Profile Position is greater than the maximum allowed drive amplifier velocity).	The value in the error auxiliary information gives the Modbus register address of the parameter at which the initialization error was detected.
110D	1	After the factory settings are completed, basic configurations must be performed to the drive amplifier	Some programs are not executed or are not fully executed.	–
110E	0	A parameter that requires the restart of the drive amplifier has been changed	It will be displayed only by the commissioning software. After any change occurs to the parameter, the drive amplifier must be shut down and restarted.	Restart the drive amplifier to enable the function of this parameter. Please see Chapter Parameters, page 418 for the information of the parameters that require a restart of the drive amplifier.
110F	0	Functions are not available for the device specification	This special device specification does not support this function or parameter.	Please make sure to use the correct device specifications, especially the motor model, encoder model and holding brake.
1110	0	Incorrect upload or download file ID	The specific device specification does not support this type of file.	Please make sure to use the correct type of device or correct configuration file.
1111	0	File transfer is not correctly initialized	The previous file transfer was interrupted.	–
1112	0	Unable to lock configuration	An external tool attempts to lock the drive amplifier configuration for upload or download. If another tool has locked the configuration of the drive amplifier, or the drive amplifier is in a operating state that cannot be locked, the configuration cannot be locked.	–

E 1xxx: General error (Continued)

Error code	Error class	Description	Causes	Troubleshooting measures
1113	0	The system is not locked for configuration transfer	An external tool attempts to transfer the configuration of the drive amplifier without locking the drive amplifier.	–
1114	4	Configuration download is interrupted	Detected a communication error or faulty external tool while downloading the configuration. Only part of the configuration has been transferred to the drive amplifier and conflicts may exist at present.	Please shut down and restart the drive amplifier, try to perform configuration download again or reset the drive amplifier to the factory settings.
1115	0	Configuration file format error	The configuration downloaded by the external tool has an invalid format.	–
1116	0	The query will be processed asynchronously	–	–
1117	0	Asynchronous request is locked	The module request is locked because the module is processing another request.	–
1118	0	Configuration data is not compatible with the device	The configuration data contains the data of other devices.	Verify the device type and the type of power stage.
1119	0	Data length error, too many bytes	–	–
111A	0	Data length error, fewer bytes	–	–
111B	4	Detected an error while downloading configuration (auxiliary information = Modbus register address)	One or more configuration values are not applied to the drive amplifier in the process of configuration download.	Please make sure that the configuration file is valid, and check whether the configuration file matches the model and version of the drive amplifier. The value in the error auxiliary information gives the Modbus register address of the parameter at which the initialization error was detected.
111C	1	Unable to initialize the scaling recalculation	Unable to initialize a parameter	The address of the parameter causing the detected error can be viewed on Trouble Logging page in Somove.
111D	3	Unable to restore the parameter to the initial state after detecting an error using the user-defined unit to recalculate the parameter.	An invalid configuration has ever occurred to the drive amplifier. Detected an error in the process of recalculation.	Please shut down and restart the drive amplifier. The relevant parameters may be identified in this way. Change parameter values as required. Make sure that the parameters are configured correctly before recalculation.
111E	1	The recalculation of the data set cannot be initiated.	A data set in the Motion Sequence operating mode cannot be recalculated.	The parameter address and data set number that cause this state can be retrieved using the *_PAR_ ScalingError* parameter.
111F	1	Recalculation is not possible.	Invalid scaling factor	Please make sure that no unnecessary scaling factor is given. Please use other scaling factors. Please reset the parameters using user-defined units before recalculating the scale.
1120	1	The recalculation of the scale cannot be initiated	Parameter recalculation is not possible.	The parameter address that cause this state can be retrieved using the *_PAR_ScalingError* parameter.
1121	0	Incorrect order of steps in scaling calculation (fieldbus).	The recalculation has been started before the recalculation is initialized.	The recalculation must be started before the recalculation is initialized.
1122	0	The recalculation of the scale cannot be initiated	Scaling recalculation is activated.	Wait for the completion of ongoing scaling recalculation.
1123	0	Unable to change parameters	Scaling recalculation is activated.	Wait for the completion of ongoing scaling recalculation.

E 1xxx: General error (Continued)

Error code	Error class	Description	Causes	Troubleshooting measures
1124	1	Timeout while recalculating scaling	Exceeding the time (30 seconds) between initializing recalculation and starting recalculation.	After the recalculation is initialized, the recalculation must be started within 30 seconds.
1125	1	Unable to calculate scaling	The scaling factor of position, velocity or acceleration/acceleration exceeds the internal calculation limit.	Try again using the updated scaling factor.
1126	0	Configuration is locked by another access channel	–	Close the locking access channel (for example, other instances of the commissioning software).
1127	0	The received key is invalid	–	–
1129	0	The testing steps have not been initiated yet.	–	–
112A	–	The captured inputs cannot be enabled.	The location acquisition has not been enabled yet.	The location acquisition is enabled through "Probing cycle" (IDN170).
112B	–	Differential acquisition configuration is not possible.	The captured input 1 is not configured for both edges (IDN169).	The captured input 1 for both edges is configured.
112C	–	Differential acquisition configuration is not possible.	The captured input 2 is not configured for both edges (IDN169).	The captured input 2 for both edges is configured.
112D	0	Unable to support edge configuration	The selected capture input does not support simultaneous identification of rising and falling edges.	Set the edge to “Rising” or “Falling”.
112E	–	The current edge configuration cannot be changed.	The current edge configuration cannot be changed as the differential acquisition is active.	Disable differential acquisition.
112F	0	The settings of the time filter cannot be changed.	The position capture with time filter is already active. The filter settings cannot be changed.	Disable position capture.
1130	0	In gear mode, the PTI input still receives the command pulse when the homing operation is started.	PTI input still receives the command pulse when the homing operation is started.	When there is a command pulse at the PTI input, do not start the homing operation.
1131	–	PTI conflicts with the Jog action.	–	–
1132	0	Analog input signal and Homing action conflict in speed mode	During the homing process, the analog input signal has a value, and both the speed command and homing command take effect simultaneously.	Do not input analog signals during homing startup.
1133	0	Analog input signal and Homing action conflict in CURRENT mode	During the homing process, the analog input signal has a value, and both the torque command and homing command take effect simultaneously.	Do not input analog signals during homing startup.
1134	0	Homing is in process when a valid homing signal is input.	The external reset signal is continuously triggered or repeatedly sent.	Do not trigger the homing operation again during the homing process.
1136	3	User position scaling is out of range.	The position user unit gear ratio setting is too large (P5-01/P5-02), exceeding the internal maximum accuracy range.	Reduce the gear ratio to prevent exceeding the range. The ratio between P5-01 and P5-02 must not exceed 8388608.
1310	2	The frequency of external reference signal is too high	The frequency of the external reference signal (AqB signal, P/D signal or CW/CCW) is higher than the allowed value.	Verify the frequency of the external reference signal. Verify the electronic gear ratio of the position operating mode.
1311	0	Unable to configure the selected signal input function or signal output function	Unable to use the selected signal input function or signal output function in the enabled operating mode.	Please select another function or change the operating mode.
1312	0	Limit switch signal or reference switch signal is not defined for the signal input function	A limit switch is required for reference point positioning operations. No limit switch is assigned to the signal input.	Please assign signal input functions to the Positive Limit Switch, Negative Limit Switch and Reference Switch.

E 1xxx: General error (Continued)

Error code	Error class	Description	Causes	Troubleshooting measures
1313	0	The signal input function cannot use the configured debounce time	The signal input function of this input does not support the selected debounce time.	Please set the debounce time to a valid value.
1314	4	At least two signal inputs have the same signal input function	At least two signal inputs have the same signal input function.	Reconfigure the input function.
1315	0	The frequency of reference signal is too high	The frequency of the pulse signal (AqB, pulse/direction and CW/ CCW) is beyond the given range. The received pulse may be lost.	Adjust the frequency of the reference signal according to the input frequency of the drive amplifier. In addition, necessarily adjust the electronic gear ratio of the position operating mode according to the application requirements (position accuracy and velocity).
1316	1	Position capture cannot be performed through the signal input now. Position capture is already used for	parameter _SigLatched Bit 28	–
1317	0	Interference coupling of interface PTI	Interference pulses or prohibited pulse edge conflicts detected (simultaneous for signal A and signal B).	Verify the cable specification, shield connection and EMC.
1318	3	Unable to use the selected analog input type	Configuration error, selected an analog input function but not set an analog input.	Correct configuration.
1319	1	Analog input disconnected	Analog input is not connected.	Check I/O connection.
1320	3	CW/CCW input signal error	The voltage of CW/CCW is high at the same time.	Check the CW/CCW input signal, confirm the cable specification, shield connection and other issues concerning EMC .
1321	3	ATT algorithm and analog input conflict	The ATT algorithm cannot be used with analog input speed and torque modes (except ATT Lite).	Check the mode configuration to avoid using the ATT algorithm with the speed and torque modes of analog inputs.
1501	4	System error detected: Unable to determine the state of the DriveCom state machine.	–	–
1502	4	System error detected: Unable to determine the state of the HWL low-level state machine.	–	–
1503	1	Quick Stop is already triggered via the fieldbus.	Quick Stop is already triggered via the fieldbus. The option code for Quick Stop has been set to -1 or -2, which will cause the drive amplifier to enter operating state 9 Fault, instead of operating state 7 Quick Stop Active.	–
1504	2	Unable to enable power stage Parameter *_SigLatched* Bit 4	The safety input function "Servo On" has been assigned to an input. However, there is still a 0 level present on the signal input.	A 1 level must be present on the signal input.
1600	0	Oscilloscope: No other data available	–	–
1601	0	Oscilloscope: Incomplete parameter settings	–	–
1602	0	Oscilloscope: Trigger variable not defined	–	–
1606	0	Record is still active	–	–
1607	0	Recording: Trigger not defined	–	–

E 1xxx: General error (Continued)

Error code	Error class	Description	Causes	Troubleshooting measures
1608	0	Recording: Invalid trigger option	–	–
1609	0	Recording: No channel selected	–	–
160A	0	Recording: No data available	–	–
160B	0	Unable to record parameters	–	–
160C	1	Auto-tuning: The moment of inertia is beyond the permissible range	The moment of inertia for the load is too high.	Verify whether the system can move freely. Verify the load. Please use the device of different power.
160E	1	Auto-tuning: Unable to start test motion	–	–
160F	1	Auto-tuning: Unable to enable power stage	Auto-tuning is not started in the operating state Ready to Switch On ”.	Enable auto-tuning when the drive amplifier is in the operating state Ready to Switch On.
1610	1	Auto-tuning: Processing stopped	Auto-tuning has been ended by a user command or has been interrupted due to an error detected in the drive amplifier (See the additional error information in the error memory, for example, DC bus undervoltage and limit switch triggered).	Troubleshoot the cause of the stop and restart the auto-tuning.
1611	1	System error detected: Unable to write parameters while performing auto-tuning	–	–
1612	1	System error detected: Unable to read parameters while performing auto-tuning	–	–
1613	1	Auto-tuning: Exceeding the maximum permissible range of motion	When auto-setting, there is motion beyond the set range of motion.	Increase the value for the range of motion.
1614	0	Auto-tuning: Enabled	Auto-tuning has been started twice at the same time, or auto-tuning parameters have changed during auto-tuning.	Wait until auto-tuning ends and is restarted.
1615	0	Auto-tuning: Unable to change this parameter when the auto-tuning is enabled	The parameter *AT_gain* or *AT_J* is written during auto-tuning.	Change parameters till the completion of auto-tuning.
1617	1	Auto-tuning: Friction torque or load torque is too high	Reached the maximum current (parameter P0-24 *CTRL_I_max*).	Verify whether the system can move freely. Verify the load. Please use the device of different power.
1618	1	Auto-tuning: Optimization interrupted	Internal auto-tuning process is not ended; position deviation may be too high.	Please see the auxiliary information about the error in the error memory.
1619	0	Auto-tuning: Auto-tuning velocity jump is not enough	Auto-tuning velocity <2 × AT_n_ tolerance. The drive amplifier is only checked at the first velocity jump.	Please change the auto-tuning velocity or the AT_ n_tolerance to achieve the desired state.
1620	1	Auto-tuning: Load torque is too high	The product power does not fit the machine load. The identified machine moment of inertia is too high compared to the motor moment of inertia.	Reduce the load and check the product power.
1621	1	System error detected: Calculation error	–	–
1622	0	Auto-tuning: Unable to perform auto-tuning	Auto-tuning can only be performed if no operating mode is enabled.	End the enabled operating mode or disable the power stage.

E 1xxx: General error (Continued)

Error code	Error class	Description	Causes	Troubleshooting measures
1623	1	Auto-tuning: Interrupt auto-tuning through stop request	Auto-tuning can only be performed if no operating mode is enabled.	End the enabled operating mode or disable the power stage.
1624	0	Real-time auto-tuning: acceleration and deceleration below the lower limit: 2,000 rpm	The acceleration is lower than the lower limit, and the real-time auto-tuning identification is inaccurate.	Increase the operating acceleration and deceleration.
1625	0	Adaptive notch filter: Oscillation frequency lower than the lower limit:150Hz	When the oscillation frequency is lower than 150Hz, the suppression effect of the adaptive notch filter is not significant.	–
1626	3	ATT Autotuning: Not possible to perform Autotuning	• The ATT algorithm is not selected. • The servo is not in the RDY state.	• Ensure P0-01=6 or 7, meaning self-tuning is only possible under the ATT control algorithm. • Ensure the servo is in the RDY state before starting the tuning process.
1627	3	ATT Auto tunning speed is out of range.	During the process of setting the ATT self-tuning inertia, the actual speed exceeds the internally permitted maximum speed.	Inspect the encoder and wiring for issues, then attempt auto-tuning again.
1628	0	Can not Enable One Step Tuning when the servo is enable (state 6).	One step tuning requires the servo to be in a disabled state (State 5 or lower), which conflicts with the current state.	First disable the servo (switch the status to disabled), then initiate one step tuning.
1629	3	One step tuning function is stopped by external signal.	Received a fault signal or self-tuning stop signal during the tuning process.	Ensure uninterrupted signal transmission throughout the entire period without halting the self-tuning function.
1630	0	Tuning Level is too high according to notch filter max stiffness.	The number of detected resonance points corresponding to the set tuning level exceeds the number of automatic notch filters.	Lower the tuning level for the self-tuning function.
1631	3	Abnormal vibration happens during One Step Tuning.	The current parameters cause mechanical equipment vibration.	Reduce stiffness and re-tune or manually debug parameters.
1632	3	The speed and acceleration/ deceleration cannot trigger valid inertia detection or the stiffness is too low.	The set speed or acceleration/ deceleration command does not meet the criteria for valid signals during inertia identification.	Increase detection speed or reduce acceleration time.
1633	0	All The stiffness detection are abnormal.	Each stiffness value within the selected tuning range will cause significant overshoot or speed ripple.	Reduce stiffness and recalibrate or manually debug parameters.
1634	0	User tuning parameters is out of range.	The user-input parameters such as maximum displacement, maximum rotational speed, and acceleration exceed the specified range.	Adjust parameters to the permissible range as specified in the reference manual.
1635	0	Failed to write command control word because the previous command is currently executing or the read/write bit is invalid.	• The previous control command has not been fully executed (e.g., the motion command has not completed). • Command transmission interval is too short; the drive has not completed processing.	Wait for the previous command to complete before sending a new command.
16F0	0	Disable auto-tuning when the auto-tuning mode is invalid	The auto-tuning mode is invalid.	Activate auto-tuning after changing the auto-tuning mode to an valid mode.
1A00	0	System error detected: FIFO memory overflow	–	–
1A01	3	Motor replaced (other motor models)	The identified motor is not a previously identified motor.	Press S key to confirm the replacement.
1A03	4	System error detected: Mismatch between hardware and firmware	–	–
1A04	0	System error detected: SDFM value is not read timely	–	Please contact the Technical Support.

E 1xxx: General error (Continued)

Error code	Error class	Description	Causes	Troubleshooting measures
1A05	–	In script mode, dynamic memory allocation has failed.	–	–
1B00	3	System error detected: Wrong motor and power stage parameters	Incorrect manufacturer parameter value (data) in the non-transitory memory of the device	Replace the device.
1B02	3	The target value of given torque is too high.	–	–
1B04	2	The product of analog encoder resolution and maximum velocity is too high	The value for the maximum velocity P4-18 or the value for the analog encoder resolution P0-18 is too high.	Reduce the analog encoder resolution P0-18 or reduce the value of the maximum velocity P4-18.
1B05	2	Detected an error while converting parameters	–	–
1B06	3	Unable to initiate Wake & Shake. Parameter *_SigLatched* Bit 30	The motor speed is too high when initiating Wake & Shake.	Check if the motor is in a stopped state when initiating Wake & Shake.
1B07	0	The motor speed is too high when ending Wake & Shake.	The motor is not in a stopped state when ending Wake & Shake. The commutation offset calculated during Wake & Shake may be inaccurate depending on the mechanical system.	Check the mechanical system.
1B08	3	There is a significant variation in the position of Wake & Shake.	The entered motor data is incorrect, especially motor resistance, motor inertia (for rotary motors), or motor mass (for linear motors). The settings in the *WakeAndShakeGain* parameter are incorrect.	Verify the motor data. Check the settings of the *WakeAndShakeGain* parameter.
1B09	0	The rated current during Wake & Shake has been reduced through I2t monitoring.	The current used during Wake & Shake is too high.	–
1B0A	0	The rated current for Wake & Shake may be too high for the output stage used.	Execute Wake & Shake with the rated current of the motor. When the rated current of the motor exceeds that of the output stage, the current used during Wake & Shake may be reduced through I2t monitoring of the output stage.	–
1B0B	3	The operating state must beReady To Switch On when commutation offset determination begins.	–	Set the drive amplifier to the Ready To Switch Onstate and restart to determine the commutation offset.
1B0C	3	The motor velocity is too high.	–	–
1B0D	3	The velocity value measured by the Velocity Observer is too high.	The system inertia calculated by the Velocity Observer is incorrect. The dynamics of the Velocity Observer are incorrect. During operation, the system inertia undergoes changes. In this case, it is not possible to use the Velocity Observer for operation. The Velocity Observer must be disabled.	The dynamics of the Velocity Observer can be modified by changing the parameter *CTRL_SpdObsDyn*. The system inertia used for Velocity Observer calculations can be modified by changing the parameter *CTRL_SpdObsInert*. If the detected error persists, disable the Velocity Observer.
1B0E	3	The commutation angle cannot be determined when ending Wake & Shake.	The input motor data is incorrect, such as motor resistance, motor inertia (for rotary motors), or motor mass (for linear motors). The setting in the *WakeAndShakeGain* parameter is incorrect. The wiring of the holding brake is incorrect (if present).	Verify the motor data. Check the settings of the *WakeAndShakeGain* parameter. Ensure the wiring of the holding brake is correct.

E 1xxx: General error (Continued)

Error code	Error class	Description	Causes	Troubleshooting measures
1B0F	3	Too high velocity detected during power stage enabling, exceeding the velocity set by the parameter P6-42.	Incorrect encoder signal/incorrect motor phase line connection.	Make sure that the encoder is connected correctly or the power supply of the motor is connected correctly.
1B10	3	Out of control in position mode because current saturation	1. High inertia, but jerk filter set too low. 2. An abnormal resonance was generated.	1. Re-initialize ATT self-tuning, automatically learning inertia and jerk. 2. Manually increase the value of the jerk filter. 3. Optimize other control loop parameters to suppress overshoot and prevent saturation.
1B11	3	Actual motor velocity difference is out of range.	ATT algorithm, in position mode, the deviation between the actual speed and the speed command in the position command exceeds the settings specified in P6-34/P6-35.	1. Inspect the mechanical structure, eliminate jams, tighten loose components, and remove any gaps. 2. Adjust control parameters to improve actual speed tracking performance. 3. If the P6-34/P6-35 conditions are too stringent, their values may be increased based on site conditions.
1B12	3	Actual motor position is out of range.	1. ATT self-tuning exceeds the range set in P6-52. 2. In the application of the ATT die bonding machine, the swing arm has exceeded the set angle (±60 degrees or ±93 degrees).	1. Adjust soft limit parameter P6-52 to expand the permissible range. 2. During die bonding machine operation, inspect the swing arm's rotational angle to ensure it does not exceed the limit.
1B13	3	Motor speed is dragged too high during enabling of power stage.	Before enabling, the motor is in an externally driven state, and the feedback speed exceeds the set value in P6-42.	Before enabling, check if the motor is moving (e.g., the Z-axis sliding downward due to gravity), ensuring its speed upon enabling does not exceed the value set in P6-42.
1B14	3	The difference between the actual speed and the model's theoretical value is too large.	In the ATT algorithm: 1. the inertia setting is too small 2. Abnormal vibration 3. operational failure	1. Relearning Inertia 2. Enable the self-learning notch filter function of P2-00 3. Optimize control algorithm parameters

E 2xxx: Overcurrent error

Error code	Error class	Description	Causes	Troubleshooting measures
2201	3	System error detected: DC bus transfer error	–	–
2300	3	Power stage overcurrent	Motor short circuit and power stage disabled. Incorrect motor phase line connection.	Make sure that the power supply of the motor is connected correctly.
2301	3	Braking resistor overcurrent	Short circuit of brake resistor.	Make sure that the external braking resistor has the correct wiring and power.
2302	3	Power stage phase-U overcurrent	The phase U of the motor is short-circuited to ground or short circuit occurs between phase U and other phases and the power stage is disabled. Incorrect motor phase line connection.	Eliminate the short circuit and ensure that the motor power cables are connected correctly.
2303	3	Power stage phase-W overcurrent	The phase W of the motor is short-circuited to ground or short circuit occurs between phase W and other phases and the power stage is disabled. Incorrect motor phase line connection.	Eliminate the short circuit and ensure that the motor power cables are connected correctly.
2304	3	Power stage phases U and W overcurrent	The phase-U and phase-W of the motor is short-circuited to ground or short circuit occurs between phase-U and phase-W and other phases and the power stage is disabled. Incorrect motor phase line connection.	Eliminate the short circuit and ensure that the motor power cables are connected correctly.
2305	3	Power stage current offset is too large	The load is too large, the motor is locked, the encoder connection is lost, and the motor phase line is connected incorrectly.	Check the connection between the motor and the load, the encoder connection, and the connection of the motor power cable.
2306	3	Power stage phase-U current is abnormal during startup	Motor phase-U is short-circuited to ground and short circuit occurs between phase U and other phases or the power stage is disconnected.	Eliminate the short circuit and ensure that the motor power cables are connected correctly.
2307	3	Power stage phase W current is abnormal during startup	Motor phase-W is short-circuited to ground and short circuit occurs between phase U and other phases or the power stage is disconnected.	Eliminate the short circuit and ensure that the motor power cables are connected correctly.

E 3xxx: Voltage error

Error code	Error class	Description	Causes	Troubleshooting measures
3100	2	Power supply unavailable, undervoltage or overvoltage	The phase is missing for more than 50 ms. The supply voltage is not within the valid range. The supply frequency is not within the valid range.	Make sure that the supply voltage is consistent with the technical parameters.
3101	0	Switching power supply 24Vdc output is missing	Switching power supply does not work.	Please contact the Technical Support.
3200	3	DC bus overvoltage	The feedback during deceleration is too high.	Check the deceleration ramp and the power of the drive and braking resistor.
3201	3	DC bus undervoltage (power-off threshold)	Supply voltage loss, poor voltage supply.	Guarantee power supply.
3202	2	DC bus undervoltage (emergency stop threshold)	Supply voltage loss, poor voltage supply.	Guarantee power supply.
3203	3	DC bus overvoltage (during startup)	The power supply is abnormal or the motor phase is short-circuited to ground.	Check the power supply and motor output and ensure the correct power cable connection of the motor.
3206	0	DC bus undervoltage, power supply undervoltage, power supply overvoltage or lack of power supply	Lack of power supply or low supply voltage.	Verify the power supply and make sure that the supply voltage is consistent with the technical parameters.
3207	3	Three phases - Phase loss	• Loose, broken, or poor contact in the motor's three-phase wiring • Power phase loss (e.g., one phase of three phases power supply is disconnected)	• Inspect the motor wiring and retighten or replace the wires. • Check the power supply to ensure all three phases are functioning normally.
3300	0	The winding voltage of the motor is lower than the supply voltage of the drive amplifier.	If the winding voltage of the motor is lower than the supply voltage of the drive amplifier, it may lead to excessive electrical noise.	Check the motor temperature. When the temperature is too high, use a motor with higher winding voltage or a drive amplifier with lower supply voltage.

E 4xxx: Temperature error

Error code	Error class	Description	Causes	Troubleshooting measures
4100	3	Power stage overheating	Transistor overheating: ambient over-temperature, fan error or dust.	Check the fan to improvedissipation performance of the control cabinet.
4101	0	Power stage overheating	Transistor overheating: ambient over-temperature, fan error or dust.	Check the fan to improve the heat dissipation performance of the control cabinet.
4102	0 or 3	Power supply power stage overload (I^2t)	The current exceeds the nominal value for a long time.	Check the size and reduce the cycle time.
4200	3	Device overheating	The ambient temperature is too high or the heat dissipation performance is degraded by dust.	Improve the heat dissipation performance of the control cabinet. If a fan is installed, make sure that it is functioning properly. Install a fan in the control cabinet. Please improve the thermal conductivity from the back of the device to the control cabinet.
4201	0	Excess temperature of CPU	The ambient temperature is too high or the heat dissipation performance is degraded by dust.	Improve the heat dissipation performance of the control cabinet. If a fan is installed, make sure that it is functioning properly. Install a fan in the control cabinet. Please improve the thermal conductivity from the back of the device to the control cabinet.
4300	2	Motor overheating. Parameter *_SigLatched* Bit 17	Excess ambient temperature. Excess turn-on time. Improper motor installation (insulation). Motor overload.	Check motor installation: Heat must be dissipated through mounting surface. Reduce ambient temperature. Ensure proper ventilation.
4301	0	Motor overheating. Parameter *_WarnLatched* Bit 17	Excess ambient temperature. Excess turn-on time. Improper motor installation (insulation). Motor overload.	Check motor installation: Heat must be dissipated through mounting surface. Reduce ambient temperature. Ensure proper ventilation.
4302	0 or 3	Motor overload (I^2t)	The current exceeds the nominal value for a long time.	Verify whether the system can move freely. Verify the load. Use a motor of different power if necessary.
4303	0	Motor temperature unmonitored.	Temperature parameters unavailable or invalid (in the motor's electronic nameplate, non-volatile memory of the encoder); parameter A12 equals 0.	Please consult your Schneider Electric service representative. Replace the motor.
4304	0	The encoder does not support motor temperature monitoring.	–	–
4402	0	Braking resistor overload (I^2t >75%)	The feedback energy is too high. The external load is too high. The motor velocity is too high. The deceleration value is too high. Insufficient braking resistor.	Reduce load, velocity and deceleration. Please make sure that the braking resistor has a large enough design capacity.
4403	0	Braking resistor overload (I^2t >100%)	The feedback energy is too high. The external load is too high. The motor velocity is too high. The deceleration value is too high. Insufficient braking resistor.	Reduce load, velocity and deceleration. Please make sure that the braking resistor has a large enough design capacity.
4404	3	Disable the brake when Tz mode is activated	The motor output is short-circuited when the braking resistor is connected.	Eliminate the short circuit and ensure that the motor power cables are connected correctly.

E 5xxx: Hardware error

Error code	Error class	Description	Causes	Troubleshooting
5101	0	Insufficient Modbus voltage supply.	–	–
5102	4	Motor encoder supply voltage Parameter _*SigLatched* Bit 16	The encoder's voltage supply is not within the allowed range of 8V to 12V.	Replace the device. Please consult your Schneider Electric service representative.
5200	4	An error in the connection between the motor and the encoder detected. Parameter_*SigLatched* Bit 16	The encoder not properly connected, EMI.	–
5201	4	A communication failure with the motor encoder detected. Parameter_*SigLatched* Bit 16	The encoder not properly connected, EMI.	–
5202	4	Motor encoder not supported. Parameter_*SigLatched* Bit 16	An incompatible encoder connected.	–
5203	4	A connection error with the motor encoder detected. Parameter_*SigLatched* Bit 16	The encoder not properly connected	–
5204	3	The connection with the motor encoder lost. Parameter_*SigLatched* Bit 16	The encoder not properly connected	–
5206	0	A communication failure with the encoder detected. Parameter_*WarnLatched* Bit 16	The communication channel to the encoder experiencing interference.	Check the EMC measures.
5207	1	Unable to support this function	The current hardware version does not support this function.	Please restart the drive. Please perform a factory reset to the drive. If the error persists, contact the Technical Support or replace the drive.
5302	4	The motor requires a PWM frequency that is not supported by the output stage (16 kHz).	The motor can only operate at a PWM frequency of 16 kHz (as stated on the motor's electronic nameplate). However, the output stage does not support this PWM frequency.	Use a motor that operates at a PWM frequency of 8 kHz. Please consult your Schneider Electric service representative.
5430	4	System error detected: EEPROM read error	–	Please restart the drive. Please perform a factory reset to the drive. If the error persists, contact the Technical Support or replace the drive.
5431	3	System error: EEPROM write error	–	Please restart the drive. Please perform a factory reset to the drive. If the error persists, contact the Technical Support or replace the drive.
5432	3	System error: EEPROM state machine	–	Please restart the drive. Please perform a factory reset to the drive. If the error persists, contact the Technical Support or replace the drive.
5433	3	System error: EEPROM address error	–	Please restart the drive. Please perform a factory reset to the drive. If the error persists, contact the Technical Support or replace the drive.
5434	3	System error: EEPROM wrong data length	–	Please restart the drive. Please perform a factory reset to the drive. If the error persists, contact the Technical Support or replace the drive.
5435	4	System error: EEPROM unformatted	–	Please restart the drive. Please perform a factory reset to the drive. If the error persists, contact the Technical Support or replace the drive.

E 5xxx: Hardware error (Continued)

Error code	Error class	Description	Causes	Troubleshooting
5436	4	System error: EEPROM incompatible structure	–	Please restart the drive. Please perform a factory reset to the drive. If the error persists, contact the Technical Support or replace the drive.
5437	4	System error detected: EEPROM checksum error (manufacturer data)	–	Please restart the drive. Please perform a factory reset to the drive. If the error persists, contact the Technical Support or replace the drive.
5438	3	System error detected: EEPROM checksum error (User parameters)	–	Please restart the drive. Please perform a factory reset to the drive. If the error persists, contact the Technical Support or replace the drive.
5439	3	System error detected: Non-volatile memory checksum error (fieldbus parameters) Parameter_*SigLatched* Bit 29	–	–
543B	4	System error detected: No valid manufacturing data	–	Please restart the drive. Please perform a factory reset to the drive. If the error persists, contact the Technical Support or replace the drive.
543E	3	System error detected: EEPROM checksum error	–	Please restart the drive. Please perform a factory reset to the drive. If the error persists, contact the Technical Support or replace the drive.
543F	3	System error detected: EEPROM checksum error (motor parameters)	–	Please restart the drive. Please perform a factory reset to the drive. If the error persists, contact the Technical Support or replace the drive.
5441	4	System error detected: EEPROM checksum error (Control loop parameter set)	–	Please restart the drive. Please perform a factory reset to the drive. If the error persists, contact the Technical Support or replace the drive.
5442	4	System error detected: EEPROM checksum error (Control loop parameter set 1)	–	Please restart the drive. Please perform a factory reset to the drive. If the error persists, contact the Technical Support or replace the drive.
5443	4	System error detected: EEPROM checksum error (Control loop parameter set 2)	–	Please restart the drive. Please perform a factory reset to the drive. If the error persists, contact the Technical Support or replace the drive.
5444	4	System error detected: EEPROM checksum error (NoReset parameters)	–	Please restart the drive. Please perform a factory reset to the drive. If the error persists, contact the Technical Support or replace the drive.
5445	4	System error detected: EEPROM checksum error (hardware information)	–	Please restart the drive. Please perform a factory reset to the drive. If the error persists, contact the Technical Support or replace the drive.
5446	4	System error detected: EEPROM checksum error (for blackout data)	The internal EEPROM is not functioning properly.	Please restart the drive. Please perform a factory reset to the drive. If the error persists, contact the Technical Support or replace the drive.
5447	3	System error: EEPROM checksum error (data set operating mode motion sequence)	System error.	Restore the factory settings or replace the drive.
544A	4	System error detected: Non-volatile memory checksum error (management data) Parameter_*SigLatched* Bit 29	–	–
544C	4	System error detected: EEPROM with write protection	–	Please restart the drive. Please perform a factory reset to the drive. If the error persists, contact the Technical Support or replace the drive.

E 5xxx: Hardware error (Continued)

Error code	Error class	Description	Causes	Troubleshooting
545B	4	FW error	Incompatibility of FW with hardware	Re-download the corresponding firmware for the product.
5468	4	System error detected: EEPROM checksum error (Control loop parameter set 3)	–	Please restart the drive. Please perform a factory reset to the drive. If the error persists, contact the Technical Support or replace the drive.
5469	4	System error detected: EEPROM checksum error (real-time auto-tuning parameter set)	–	–
546A	4	EPROM checksum exceeding motion sequence CRC error	System error.	Restore the factory settings or replace the drive.
546B	4	EEPROM checksum CTRLG2 block CRC error	1. Data corruption in EEPROM storage 2. Failed to read/write EEPROM	1. Restart the servo 2. Factory reset
5500	3	System error detected: Data transfer timeout	–	–
5502	2	System error detected: Read/write request timeout	–	–
5503	2	System error detected: Invalid response when issuing read/write request	–	–
5504	4	System error detected: Security module unavailable	–	–
5505	4	System error detected: Unable to determine the type of security module.	–	–
5506	1	An error is detected when writing access to the security module via the fieldbus. Additional information in the error memory indicates the detailed error code.	–	–
5600	3	Detected motor connection phase error	Motor phase line missing.	Verify the connection of the motor phase line.
5603	3	Rectification and commutation error found	Incorrect motor wiring. The encoder signal is lost due to interference coupling. The load torque is higher than the motor torque. The encoder EEPROM contains invalid data (the phase difference of the encoder is incorrect). The motor is not calibrated accurately.	Please the wiring of motor phase line and encoder. Verify the EMC to ensure that the grounding and shielding connections are correct. Use a motor with its power to ensure the load torque. Verify the motor data. Please contact the Technical Support.
5604	3	Power stage overcurrent is detected, current loop command reaches maximum current threshold (300%) and exceeds the time set by the parameter P6-24	Incorrect encoder signal/incorrect motor phase line connection/ motor overload.	Make sure that the encoder is connected correctly/Make sure that the power supply of the motor is connected correctly/Check the mechanical system to eliminate locked rotor, check the match between the motor and load, and check the acceleration ramp.

E 6xxx: Software error

Error code	Error class	Description	Causes	Troubleshooting measures
6102	4	System error detected: Internal software error	–	–
6103	4	System error detected: System stack overflow	–	–
6104	0	System error detected: divisor is 0 (internal)	–	–
6105	0	System error detected: Overflow during 32-bit operation (internal)	–	–
6106	4	System error detected: Data interface size not suitable	–	–
6107	0	Parameter out of range (calculation error detected)	–	–
6108	0	Function not available	–	–
6109	0	System error detected: Beyond the internal range	–	–
610A	2	System error detected: Calculated value cannot be expressed as a 32-bit number	–	–
610D	0	An error is detected in the selected parameters	A wrong parameter value is selected.	Check the parameter value to be written.
610E	4	System error detected: 24 Vdc below the power-off voltage threshold	–	–
610F	4	System error detected: internal Timer base is missing (Timer0)	–	–
6111	2	System error detected: Memory range locked	–	–
6112	2	System error detected: No memory	–	–
6113	1	System error detected: Calculated value cannot be expressed as a 16-bit number	–	–
6114	4	System error detected: Disable function call from interrupt service	Programming error.	–

E 7xxx: Interface and wiring error

Error code	Error class	Description	Causes	Troubleshooting measures
7100	4	System error detected: Invalid power stage data	Incorrect power stage data stored in the device (CRC error), error detected in internal memory data.	Contact the Technical Support or replace the device.
7110	2	System error detected: Internal brake resistor	Internal brake resistor function abnormal or not connected.	Please consult your Schneider Electric service representative.
7111	0	External braking resistor is active and parameter value cannot be changed	When the external braking resistor is active, still try to change the value of a parameter in P0-22, P0-23, or P0-24.	To change the value of a parameter in P0-22, P0-23, or P0-24, the external braking resistor must not be active.
7112	2	External braking resistor not connected.	The external brake resistor has been activated (parameter *RESint_ext*), but no external brake resistor has been detected.	Check the wiring of the external brake resistor. Make sure that the braking resistor has the correct value.
7113	–	The DC Bus voltage is below the required value to enable the brake resistor.	–	–
7122	4	Invalid motor data	Incorrect motor data saved in the encoder, error detected in internal memory data.	Contact the Technical Support or replace the motor.
712D	4	Motor model data not configured	Motor model data not configured.	–
712F	0	No data field on the electronic nameplate of motor	–	–
7132	0	System error detected: Unable to write motor configuration	–	–
7133	0	Unable to write motor configuration	–	–
7134	4	Incomplete motor configuration	–	–
7135	4	Unable to support this format	–	–
7136	4	Incorrect encoder type selected in parameter P6-01	–	–
7137	4	Detected an error during internal conversion of motor configuration	–	–
7138	4	Parameter configured for the motor exceeds the permissible range	–	–
7139	0	Encoder offset: The data field in the encoder has an error.	–	–
713B	4	The encoder connected with the motor is changed	The motor connected after this power-on of the drive is different from the motor connected during the previous power-off.	Please restart the drive. Please perform a factory reset to the drive. Please contact the Technical Support.
7200	4	System error detected: Calibration analog/digital converter/BLE file error in production	–	–
7320	4	System error detected: Invalid encoder parameters. Parameter_*SigLatched* Bit 16	No parameter settings have been made for interference coupling on the communication channel (Hiperface) for connecting the encoder or motor encoder during factory production.	Please consult your Schneider Electric service representative.

E 7xxx: Interface and wiring error (Continued)

Error code	Error class	Description	Causes	Troubleshooting measures
7321	3	Timeout occurs when reading the absolute position from the encoder. Parameter_*SigLatched* Bit 16	Communication channel for connecting the encoder or motor encoder. The interference coupling function on (Hiperface) is not functioning properly.	Check the EMC measures.
7347	0	System error detected: Unable to initialize position	The encoder signal is disturbed.	Please reduce the interference with the encoder signal. Check the shield connection. Please contact the Technical Support.
734C	par.	An error is detected in the quasi-absolute position. Parameter_*SigLatched* Bit 16	During the period when the drive amplifier is in a closed state, the motor shaft may have rotated. A quasi-absolute position was discovered beyond the allowable range of motor shaft movement.	When the quasi-absolute position feature is active, it is only permitted to deactivate the drive while the motor is in a stopped state. Do not allow the motor shaft to move during the period when the drive amplifier is closed.
734D	0	Index pulse not available for the encoder	–	–
7500	0	RS485/Modbus: Overflow error detected	EMC and wiring.	Verify the cable.
7501	0	RS485/Modbus: Framing error detected	EMC and wiring.	Verify the cable.
7502	0	RS485/Modbus: Parity check error detected	EMC and wiring.	Verify the cable.
7503	0	RS485/Modbus: Reception error detected	EMC and wiring.	Verify the cable.
7601	4	System error detected: Unidentified encoder type	–	–
760E	2	Position assessment error (an error is detected during signal identification). Parameter_*SigLatched* Bit 22	Encoder signal affected by EMI.	Check the wiring and cable shielding.
760F	0	Position assessment error (interference coupling detected). Parameter_*WarnLatched* Bit 22	Encoder signal affected by EMI.	Check the wiring and cable shielding.
7619	4	Incorrect encoder communication	Incorrect encoder wiring/adjustment or incorrect encoder parameter settings.	Verify the encoder cable: wiring and shield connection. Verify the adjustment of the encoder. Verify the parameter settings of the encoder.
761A	0	Incorrect encoder communication	Incorrect encoder wiring	Verify the encoder cable: wiring and shield connection.
761D	2	Maximum encoder velocity exceeded	Maximum encoder velocity exceeded. For communication encoders, detection of an encoder communication error may also cause this error.	–
7621	1	Failed runtime compensation. Parameter_*SigLatched* Bit 22	–	Verify the encoder cable: wiring and shield connection.
7622	0	Rotary transformer timeout. Parameter_*WarnLatched* Bit 22	System malfunction identified.	Replace the encoder module.

E 7xxx: Interface and wiring error (Continued)

Error code	Error class	Description	Causes	Troubleshooting measures
7623	0	Absolute encoder signal unavailable. Parameter_*WarnLatched* Bit 22	No available encoder on the specified input terminal (ENC_abs_Source).	Check the wiring and inspect the encoder. Modify the value of the parameter ENC_abs_source.
7625	0	Unable to set the absolute position of encoder 1. Parameter_*WarnLatched* Bit 22	Encoder not connected to input terminal of encoder 1.	Connect an encoder to the input terminal of encoder 1 before directly setting the absolute position using ENC1_abs_pos.
7626	4	Overflow error detected during encoder calibration. Parameter_*SigLatched* Bit 22	The multi-turn resolution of the machine encoder exceeds the system limits relative to the motor axis, for example, due to a mechanical gear ratio between the machine encoder and the motor encoder.	Reduce the number of bits used for position assessment of the multi-turn resolution by using parameter ENCDigResMulUsed.
762A	3	Failed to initialize the incremental encoder	The encoder is not connected or the communication is disturbed, EMC.	Verify the cable connection. Verify the cable specification, shield connection and EMC.
762B	3	Failed to initialize the incremental encoder: motor rotation during power-on.	The motor rotates during drive power-on, failing to identify the initial position.	Stop the motor and power it up again
762C	3	Motor velocity detected by incremental encoder is too high	The encoder signal is disturbed, or the motor velocity is too high.	Please reduce the interference with the encoder signal and verify the shield connection. Please reduce the motor velocity.
762D	3	An internal error occurs to the encoder communication	An internal error occurs to the encoder.	Verify the cable connection. Verify the cable specification, shield connection and EMC. If the encoder is damaged, replace the motor.
762E	3	multi-turn encoder overspeed or over acceleration during power off.	• After power loss, the motor was rapidly dragged by an external force beyond the encoder's recording range. • Insufficient mechanical damping of the encoder causes excessive rotational speed due to inertia after power loss.	• Ensure the motor comes to a complete stop before powering down, or add a mechanical braking device. • Inspect mechanical structures and add damping or braking measures.
762F	3	BISS encoder counting error	• Poor contact or broken BISS communication cable, resulting in signal loss. • Communication rates are excessively high, exceeding the transmission capacity of the cables and resulting in bit errors. • Encoder malfunction, counting logic error.	• Check the wiring, unplug and replug or replace the communication cable. • Reduce the BISS communication rate to ensure signal stability. • Replace the encoder and recalibrate.
7630	–	The encoder resolution is too low during high-speed startup.	–	–
7631	–	Encoder count overflow.	–	–
7632	3	Multi-turn encoder overheating.	• The operating temperature of the encoder is too high, exceeding the permissible range. • Internal circuit failure in the encoder has caused excessive power consumption and overheating. • Poor heat dissipation (e.g., installation too tight, surrounding heat sources)	• Lower the ambient temperature and enhance heat dissipation measures (such as fans). • Replace the faulty encoder. • Adjust the installation method, keep away from heat sources, and ensure adequate heat dissipation space.

E 7xxx: Interface and wiring error (Continued)

Error code	Error class	Description	Causes	Troubleshooting measures
7633	3	Multi-turn encoder multi-turn error.	Encoder multi-turn data exhibits abnormal jumps	1. Repair or replace the mechanical components of the encoder. 2. Check the communication link and eliminate interference.
7634	3	Multi-turn encoder battery error.	• Battery power depleted or voltage too low • Loose or faulty battery connections • Encoder Battery Interface Circuit Failure	• Replace with a new battery (as specified in the manual) • Re-tighten the battery terminals • Replace the servo drive
7635	0	Multi-turn encoder battery alarm	• Battery power is running low (below the alarm threshold). • Poor battery contact causes voltage fluctuations. • The alarm threshold is too low.	• Replace the battery in advance to avoid data loss due to power failure. • Check battery contacts and clean any oxidation from the terminals. • Appropriately increase the battery alarm threshold parameter (if supported).
7636	3	Multi-turn encoder state machine error.	• Encoder internal state machine program error (e.g., firmware bug) • External strong interference causes the state machine to reset or become disordered. • Encoder power supply voltage instability causes logic errors.	• Increase anti-interference measures (such as shielding and filtering) • Ensure stable power supply to the encoder by adding a voltage regulator circuit. • Upgrade the encoder firmware to the latest version.
7637	0	Multi-turn encoder over-heat / battery alarm / battery error.	• Simultaneous occurrence of overheating, low battery charge, or battery malfunction. • Internal circuit failure in the encoder caused multiple faults to occur simultaneously.	• First address the battery issue (replace the battery, check the wiring), then handle the overheating (improve heat dissipation). • If the fault persists, replace the encoder.
7701	4	System error detected: Output stage connection timeout. Parameter_*SigLatched* Bit 31	–	Please consult your Schneider Electric service representative.
7702	4	System error detected: Invalid data received from the output stage. Parameter_*SigLatched* Bit 31	–	Please consult your Schneider Electric service representative.
7703	4	System error detected: Data exchange with the output stage lost. Parameter_*SigLatched* Bit 31	–	Please consult your Schneider Electric service representative.
7704	4	System error detected: Failed data exchange for the output stage recognition. Parameter_*SigLatched* Bit 31	–	Please consult your Schneider Electric service representative.
7705	4	System error detected: Incorrect checksum identification data for the output stage. Parameter_*SigLatched* Bit 31	–	Please consult your Schneider Electric service representative.

E 7xxx: Interface and wiring error (Continued)

Error code	Error class	Description	Causes	Troubleshooting measures
7706	4	System error detected: No identification frame received from the output stage. Parameter_*SigLatched* Bit 31	–	Please consult your Schneider Electric service representative.
7707	4	System error detected: Mismatching between the output stage type and the production data.	–	Please consult your Schneider Electric service representative.
7708	4	PIC supply voltage below level Parameter_*SigLatched* Bit 31	–	Please consult your Schneider Electric service representative.
7709	4	System error detected: Invalid quantity of received data. Parameter_*SigLatched* Bit 31	–	Please consult your Schneider Electric service representative.
770A	2	System error detected: PIC received data with incorrect checksum. Parameter_*SigLatched* Bit 31	–	Please consult your Schneider Electric service representative.
770B	–	The motor has been replaced.	–	–

E Axxx: Motor operation error

Error code	Error class	Description	Causes	Troubleshooting measures
A060	2	Excess calculated velocity of the Electronic Gear operating mode. Parameter_*SigLatched* Bit 4	Excess gear ratio or the specified velocity.	Reduce the gear ratio or the specified value.
A061	2	Excessive change of position for the given value in the electronic gear mode	The given position has changed too much. Detected an error at the rated signal input.	Reduce the resolution of the master station. Verify the signal input of the reference signal.
A065	0	Unable to write the parameter	A data set is still enabled.	Wait until the end of the currently enabled data set.
A066	0	Unable to adopt the teaching position. Parameter_*WarnLatched* Bit 4	The data set type is not 'MoveAbsolute'.	Set the data set type to 'MoveAbsolute'.
A067	1	The values in the data set are invalid. The additional information in the error memory indicates the data set number (low byte) and entry (high byte). Parameter_*SigLatched* Bit 4	The values in the data set are invalid.	For more information, refer to the parameters MSM_error num and _MSM_error_entry.
A068	0	Offset positioning is not possible	The operating mode Electronic Gear is not activated or the drive method is not selected.	Enable the operating mode Electronic Gear or select the drive method.
A069	0	Unable to set offset position	Unable to set position offset when offset positioning is enabled.	Wait until the operating offset positioning ends.
A06B	2	Excessive position deviation in electronic gear mode	Position deviation reaches an impermissible high value due to velocity limitation or permissible direction.	Verify the velocity of the external given value and the velocity limitation. Verify the permissible directions.
A300	0	The deceleration is still enabled after a stop request is made	The stop is canceled earlier than normal. A new command is issued after a stop request has been issued but before it reaches the motor stop	Wait for a full stop before canceling the stop signal. Wait until the motor realizes a full stop.
A301	0	The drive amplifier is in the operating mode Quick Stop Active	Detected an error of error class 1. The drive amplifier has been stopped by Quick Stop.	–
A302	1	Stop by positive limit switch	The positive limit switch has been enabled because it has left the range of motion, the limit switch is not functioning properly or the signal is disturbed.	Verify the application. Verify the function and connection of the limit switch.
A303	1	Stop by negative limit switch	The negative limit switch has been enabled because it has left the range of motion, the limit switch is not functioning properly or the signal is disturbed.	Verify the application. Verify the function and connection of the limit switch.
A304	1	Stop by reference switch	–	–
A305	0	Unable to enable power stage in current operating state	System error.	If the warning cannot be eliminated, reset or replace the drive.
A306	1	Users trigger the software to stop	After a stop request is sent through the software, the drive is in the operating state Quick Stop Active . Unable to enable the new operating mode, an error code will be issued in response to the enable command.	Execute Fault Reset.
A307	0	Stop by internal software	In the operating mode Homing and JOG, the motion can be interrupted by internal software. Unable to enable the new operating mode, an error code will be issued in response to the enable command.	Execute Fault Reset.

E Axxx: Motor operation error (Continued)

Error code	Error class	Description	Causes	Troubleshooting measures
A308	0	The drive amplifier is in the operating state Fault or Error Response Active	Detected an error of error class 2 or higher.	Verify the error code (HMI or commissioning software) find out the error cause and execute Fault Reset.
A309	0	Drive not inOperation Enabled	A command has been issued, and execute the command on the premise that the drive amplifier is in Operation Enabled (for example, the command changing operating mode).	Set the drive amplifier to Operation Enabled and repeat the command.
A310	0	Power stage not enabled	Unable to execute the command because the power stage is not enabled. (Operating state Operation Enabled or Quick Stop Active)	Set drive to an operating state in which the power stage is enabled, see state diagram.
A311	0	Operating mode switching is active	An operating mode start request is received while the operating mode switching is active.	–
A312	0	Interrupted the generation of characteristic curve	–	–
A313	0	Position overflow, making the zero point not valid any longer (ref_ok=0)	Exceeding the limit of the range of motion and the zero point is no longer valid. Absolute motion requires a valid zero point.	Please define a zero point that is valid in the operating mode Homing.
A314	0	No valid zero point	This command requires a valid zero point (ref_ok=1).	Please define a zero point that is valid in the operating mode Homing.
A315	0	The operating mode Homing is active	As long as the operating mode Homing is enabled, it has no response to other command.	Wait until reference movement is finished.
A316	0	Overflow when calculating acceleration	–	–
A317	0	The motor is not at a standstill	A command has been issued, and as long as the motor is not at a standstill, it has no response to other command. Example: • Change of software limit switches • Change of handling of monitoring signals • Setting of reference point • Teach in of data set	Wait until the motor has come to a standstill (x_end = 1).
A318	0	Operating mode enabled (x_end = 0)	A new operating mode cannot be activated as long as another operating mode is active.	Wait until the command processing in this operating mode ends (x_end = 1) or the current operating mode ends with a stop command.
A319	1	Manual tuning/Auto-tuning: Motion out of range	The motion exceeds the maximum range of motion set by the parameter.	Check the permissible range of motion and time interval.
A31A	0	Manual tuning/Auto-tuning: amplitude/offset is too high	The magnitude of the tuning plus the offset exceeds the internal limits for velocity or current.	Select a lower amplitude and offset value.
A31B	0	Stop Request Issued	Command execution is not allowed when there is a stop request.	End the stop request and repeat the command.
A31C	0	Illegal position setting of software limit switch	The value of the negative (positive) software limit switch is greater than (less than) the value of the positive) (negative) software limit switch.	Correct the position value.
A31D	0	Out of velocity range	The velocity command is set to a value that is greater than the maximum velocity P4-07 or the current maximum velocity of the connected motor.	If the value set in P4-07 is lower than the value of the current maximum velocity of the connected motor, increase the value set in P4-07. Please reduce the velocity command value.
A31E	1	Stop by positive software limit switch	This command may not be executed because the positive software limit switch is activated.	Return to the permissible range of motion.

E Axxx: Motor operation error (Continued)

Error code	Error class	Description	Causes	Troubleshooting measures
A31F	1	Stop by negative software limit switch	This command may not be executed because the negative software limit switch is activated.	Return to the permissible range of motion.
A320	3	Exceeding the permissible position deviation	External load or acceleration is too high.	Reduce the external load or acceleration. Use a drive amplifier of different power if necessary. The error response can be set through the parameter ErrorResp_p_dif.
A321	0	Invalid RS422 position interface setting	–	–
A322	0	Detected an error while calculating the ramp	–	–
A323	3	System error detected: Detected a processing error during characteristic curve generation	–	–
A324	1	Detected an error during reference point positioning (Auxiliary information = detailed error code)	As a response to the detected error, the reference point positioning operation is ended; for a detailed explanation of the error cause, Verify the auxiliary information in the error memory.	Possible subcodes of the detected error:E A325,E A326, E A327,E A328 or E A329.
A325	1	The proximate limit switch is not activated	Positioning of the reference point towards the positive limit switch or the negative limit switch has been disabled.	Enable the limit switch via ‘IOsigLimP’ or ‘IOsigLimN’.
A326	1	Reference switch is not found between positive limit switch and negative limit switch	The reference switch is not functioning properly or is not connected properly.	Check the function and wiring of the reference switch.
A329	1	The signal of more than one positive limit switch/ negative limit switch/ reference switch is active	The reference switch or limit switch is not connected correctly, or the voltage of the switching power supply is too low.	Check the wiring of the 24Vdc power supply.
A32A	1	When moving in the negative direction, the positive limit switch is triggered	Start the reference point positioning operation in the positive direction of movement (for example, the reference point positioning operation towards the negative limit switch) and enable the positive limit switch (the switch is in the direction opposite to the direction of movement).	Verify the function and connection of the limit switch. Enable JOG motion in the negative direction of movement (the target limit switch must be connected to the negative limit switch).
A32B	1	When moving in the positive direction, the negative limit switch is triggered	Start the reference point positioning operation in the positive direction of movement (for example, the reference point positioning operation towards the positive limit switch) and enable the negative limit switch (the switch is in the direction opposite to the direction of movement).	Verify the function and connection of the limit switch. Enable JOG motion in the positive direction of movement. (The target limit switch must be connected to the positive limit switch).
A32C	1	Detected a reference switch error (switch signal is triggered momentarily or exceeded by switch)	Limit switch signal interference. The motor will be under vibration or shock load if it stops after the switch signal is enabled.	Verify the supply voltage, wiring and switch function. Verify the response of the motor after stopping and optimize the settings of the control loop.
A32D	1	Detected a positive limit switch error (switch signal is triggered momentarily or exceeded by switch)	Limit switch signal interference. The motor will be under vibration or shock load if it stops after the switch signal is enabled.	Verify the supply voltage, wiring and switch function. Verify the response of the motor after stopping and optimize the settings of the control loop.
A32E	1	Detected a negative limit switch error (switch signal is triggered momentarily or exceeded by switch)	Limit switch signal interference. The motor will be under vibration or shock load if it stops after the switch signal is enabled.	Verify the supply voltage, wiring and switch function. Verify the response of the motor after stopping and optimize the settings of the control loop.

E Axxx: Motor operation error (Continued)

Error code	Error class	Description	Causes	Troubleshooting measures
A32F	1	No index pulse found	The signal for the index pulse is not connected or not functioning properly.	Verify the index pulse signal and its connection.
A330	0	The reference point positioning operation towards the index pulse cannot be duplicated. Index pulse is too close to the switch	The difference in position between the index pulse and the switch-on point is small.	Increase the spacing between the index pulse and the switch-on point. If possible, select the half of one revolution as the spacing between the index pulse and the switch-on point.
A332	1	Detected an error while moving in operating mode JOG (Auxiliary information = Detailed error code)	Motion in operating mode JOG has been stopped as a response to the detected error.	For additional information, see the detailed error code in the error memory.
A333	3	System error detected: Invalid internal selection.	–	–
A334	2	Timed out while monitoring stop window	The position deviation after the motion ends is greater than the stop window. This situation may be caused by an external load.	Verify the external load. Check the parameters (P6-15, P6-16, and P6-17) related to stop window settings. Optimize the settings of the control loop parameters.
A336	1	System error detected: Impact limit with position offset after motion (auxiliary information = offset in increment list)	–	–
A337	0	Unable to continue executing the operating mode. Parameter_*WarnLatched* Bit 4	The interrupted motion cannot continue in the ProfilePosition operating mode because a different operating mode is enabled during this period.	Restart the operating mode.
A338	0	Operating mode not available	The selected operating mode is not available.	–
A339	0	No processing selected for motor encoder or fast position capture on motor index pulse already activated. Parameter_*WarnLatched* Bit 4	–	–
A33A	0	No valid zero point (ref_OK = 0) parameter _WarnLatched Bit 4	The zero point of the operating mode Homing is not defined. This zero point is no longer valid because the motor has been out of the range of motion The motor has no absolute encoder.	Please define a valid zero point for the operating mode Homing. Use a motor with an absolute encoder.
A33C	0	Functions are not available under this operating mode	The activated function is not available under the activated operating mode. Example: Start backlash compensation when auto-tuning/manual tuning is activated.	–
A33D	0	Hybrid motion has been enabled. Parameter_*WarnLatched* Bit 4	During operation of hybrid motion, changes to the hybrid motion occur (without reaching the end position of hybrid motion yet).	Wait for the completion of hybrid motion before setting the next position.
A33E	0	Motion is disabled. Parameter_*WarnLatched* Bit 4	Enable motionless hybrid motion.	Start motion before enabling hybrid motion.

E Axxx: Motor operation error (Continued)

Error code	Error class	Description	Causes	Troubleshooting measures
A33F	0	The position of hybrid motion is not within the range of the ongoing motion. Parameter_*WarnLatched* Bit 4	The position of hybrid motion is outside the range of motion.	Check the position of hybrid motion and its range of motion.
A340	1	An error has been detected in the Motion Sequence operating mode. The additional information in the error memory indicates the detailed error code. Parameter_*SigLatched* Bit 4	As a response to the detected error, the Motion Sequence operating mode has been stopped. For detailed information about the detected error, refer to the auxiliary information in the error memory.	Refer to the auxiliary information for the detected error.
A341	0	The hybrid motion position has been exceeded. Parameter_*WarnLatched* Bit 4	The motion has moved beyond the hybrid motion position.	–
A342	1	The target velocity has not been reached at the hybrid motion position. Parameter_*SigLatched* Bit 4	The hybrid motion position has been exceeded without reaching the target velocity.	Lower the ramp velocity in order to achieve the target velocity at the hybrid motion position.
A343	0	Processing can only be performed on a linear ramp. Parameter_*WarnLatched* Bit 4	The hybrid motion position has been set using a non-linear ramp.	Set a linear ramp.
A344	par.	Position deviation between the maximum between the motor encoder and the machine encoders has been exceeded. Parameter_*SigLatched* Bit 8	Encoder cable error or malfunction. Machine encoder not properly connected or not powered correctly. The counting direction of the motor encoder differs from that of the machine encoder. Incorrect resolution coefficient setting for the machine encoder (numerator or denominator).	Check the encoder connection. Check the parameter settings of the machine encoder.
A347	0	Exceeding the allowed position deviation parameters (P6-22/P6-24).	External load or acceleration is too high.	Reduce the external load or acceleration.
A348	1	No analog reference source is selected	The analog input channel is not configured.	Select analog channel 1 or analog channel 2 as the analog reference.
A349	3	Position setting exceeds system limits	The gear ratio setting is too low.	Modify the settings and increase the proportional coefficient.
A34A	0	The velocity setting exceeds the limit value of the system	The velocity ratio of 'VELscaleDenom' and 'VELscaleNum' leads to an excessively small scaling factor. The velocity has been set to a value higher than the maximum velocity (maximum velocity value is 13200 RPM).	Modify 'VELscaleDenom' and 'VELscaleNum' to increase the scaling factor.
A34B	0	The ramp setting exceeds the limit value of the system	The nominal ratio of 'RAMPscaleDenom' and 'RAMPscaleNum' for the ramp leads to an excessively small scaling factor.	Modify 'RAMPscaleDenom' and 'RAMPscaleNum' to increase the scaling factor.
A34C	0	The resolution of the ratio is too high (out of range).	–	–
A34D	0	The function is not available when the modulus is enabled.	This function is not available when the modulus is enabled.	To use this function, disable the modulus.

E Axxx: Motor operation error (Continued)

Error code	Error class	Description	Causes	Troubleshooting measures
A34E	0	The target values for Move Absolute cannot be used with modulus processing and the defined modulus range.	When setting 'MOD_Absolute': Minimum distance: The target value is not within the defined modulus range. Positive direction: The target value is less than 'MOD_Min'. Negative direction: The target value is greater than 'MOD_Max'.	Set the correct target value for Move Absolute.
A34F	0	The target position is outside the modulus range. As an alternative, corresponding movement is performed within the modulus range.	Under the current 'MOD_AbsMultiRng' setting, movement is only allowed within the modulus range.	Modify the parameter 'MOD_AbsMultiRng' to allow movement outside the modulus range.
A350	1	Impact limit input position is changed greatly	The operating mode Gear Electronic is activated by the “Synchronize with the position of the compensating motion” method, resulting in a position change of more than 0.25 revolutions.	Disable the impact limit under the operating mode Electronic Gear or use the “Synchronize the position of compensating motion” method.
A351	1	Unable to perform this function with this position scaling factor	The position scaling factor is less than 1 revolution/131072 usr_p, which is less than the internal resolution. In the operating mode Cyclic Synchronous Position , the resolution is not set to 1 rev/131072usr_p.	Use another different scaling factor or disable the selected function.
A352	0	The position list is enabled.	–	–
A353	0	The position list is uncategorized.	–	–
A354	0	A3540 position list and modulus	–	–
A355	1	Errors are detected when Move Relative is performed after capture. The additional information in the error memory indicates the detailed error code. Parameter_*SigLatched* Bit 4	Motion has stopped due to an error.	Check the error memory.
A356	0	The Move Relative function after capture has not been assigned to any digital input.	–	Assign the relative motion function after capture to a digital input .
A357	0	Deceleration is still active.	Execution of this command is not allowed during deceleration operation.	Wait until the motor realizes a full stop.
A358	1	Exceeding the target position using the captured Move Relative function. Parameter_*SigLatched* Bit 4	When capture results are obtained, the braking distance is too short or the velocity is too high.	Reduce velocity.
A359	0	The request cannot be processed as the captured Move Relative function is still enabled.	–	–
A35A	1	Unable to start the selected data set. Parameter_*SigLatched* Bit 4	The selected data set with the given code is not available.	Check the data set number.
A35B	0	Unable to enable the modulus. Parameter_*WarnLatched* Bit 4	The set operating mode does not support the modulus.	–

E Axxx: Motor operation error (Continued)

Error code	Error class	Description	Causes	Troubleshooting measures
A35C	1	Unable to move to the new specified position after triggering the limit switch and Fault Reset.	There is a significant deviation between the actual position and the desired position.	–
A35D	par.	Exceeding the permissible velocity deviation. Parameter_*SigLatched* Bit 8	The load or acceleration is too high.	Reduce the load or acceleration.
A35E	3	Homing time out	• The Homing target point (e.g., zero point switch) has not been triggered, preventing the Homing action from being completed. • The slow Homing speed resulted in failure to reach the target within the timeout period. • Mechanical jamming or excessive load prevents the motor from moving to zero position.	• Inspect the zero-point switch wiring and position to ensure it can be triggered. • Appropriately increase the Homing speed (within safe limits) • Eliminate mechanical jams, reduce the load, or extend the Homing timeout period.
A35F	3	DBO and flux weaken are not allowed to be active at the same time.	Incorrect parameter configuration simultaneously enabled DBO and flux weaken.	Check the parameters and disable one of the functions.
A360	3	DBO observer failed.	• DBO observer parameter settings are unreasonable (e.g., gain, bandwidth). • Motor operating conditions exceed the applicable range of the observer (e.g., high speed, heavy load) • Abnormal current or voltage feedback signals cause observer calculation errors.	• Reset the DBO observer parameters to ensure stability. • Restrict the motor's operating range to the effective range of the observer. • Check the feedback signal to eliminate sensor malfunctions or interference.

E Bxxx: Communication error

Error code	Error class	Description	Causes	Troubleshooting measures
B100	0	RS485/Modbus: Uncertain service	Unsupported Modbus service is received.	Check the application on the Modbus master station.
B101	1	I/O data configuration error (auxiliary information = Modbus register address)	The I/O data configuration contains incorrect parameters.	Check the I/O data configuration.
B102	1	Fieldbus module: General error detected. Parameter_*SigLatched* Bit 21	–	–
B103	2	Fieldbus module: Control communication channel has been closed. Parameter_*SigLatched* Bit 21	–	–
B104	2	Fieldbus module: Internal communication error detected. Parameter_*SigLatched* Bit 21	–	–
B105	2	Fieldbus module: I/O data timeout. Parameter_*SigLatched* Bit 21	–	–
B106	2	Fieldbus module: I/O data mapping error detected. Parameter_*SigLatched* Bit 21	–	–
B107	4	Fieldbus module: Non-volatile memory error detected. Parameter_*SigLatched* Bit 21	–	–
B108	1	Fieldbus module: The enabled IOC physical layer does not match the detected physical layer of the fieldbus module. Parameter_*SigLatched* Bit 21	The physical layer used for saving manufacturer data is not the usual physical layer used by the module.	Please consult your Schneider Electric service representative.
B109	4	Fieldbus module: Synchronization heartbeat between the module and the drive amplifier lost. Parameter_SigLatched Bit 21	–	–
B120	2	Cyclic communication: Incorrect cycle time. Parameter_*SigLatched* Bit 21	The drive amplifier does not support the configured cycle period, or there is a significant deviation between the configured cycle period and the measured cycle period.	Change the cycle period in the main control system to the supported cycle period by the drive amplifier, or check the synchronization request.
B121	2	Cyclic communication: Sync signal missing. Parameter_*SigLatched* Bit 21	Received two unsynchronized cycles.	Check communication.
B122	2	Cyclic communication: Incorrect synchronization. Parameter_*SigLatched* Bit 21	One signal is missing, and the expected second signal is received at the wrong timing. Possible reason is that the main control system is unable to prepare the necessary synchronization signal within the set cycle period due to insufficient processing speed.	Analyze the communication or increase the cycle period.
B123	2	Cyclic communication: Excessive tolerance in the selected cycle period. Parameter_*SigLatched* Bit 21	The tolerance of the cycle period should not exceed one-fourth of the set cycle period.	Enter the correct value.
B124	0	Cyclic communication: Drive amplifier out of sync with the main pulse. Parameter_*WarnLatched* Bit 21	The operating mode is activated, but the drive amplifier is not synchronized with the sync signal.	After the synchronization mechanism is started, wait for 120 cycles before activating the operating mode.

E Bxxx: Communication error (Continued)

Error code	Error class	Description	Causes	Troubleshooting measures
B200	0	RS485/Modbus: Record error detected	Detected a logical record error: Incorrect length or unsupported subfunction.	Check the application on the Modbus master station.
B201	2	RS485/Modbus: Connection monitoring error	The connection monitoring system detects a connection interruption.	Check the cables and cable connections used for data exchange. Make sure that the device is connected.
B202	3	RS485/Modbus: Connection monitoring warning	Non-controlling Modbus bus communication has not read or written any data within a certain period of time.	Check the Modbus server's power supply and wiring to ensure the device is online and capable of reading and writing data.
B203	0	RS485/Modbus: Incorrect number of monitored objects	–	–
B208	3	SMS script MD index out of range (MD store filed).	The MD (parameter store) index accessed in the script exceeds the actual storage range.	Modify the script to ensure that the accessed index falls within the MD range (maximum index value 313).
B209	3	SMS script motion call stack is full.	The script contains excessive nested calls to motion commands, exceeding the call stack depth limit (5 levels).	Reduce function nesting levels and optimize script logic.
B700	0	Drive characteristic profile Lexium: When activating the characteristic profile, there is no mapping for dmControl, refA, or refB.	There is no mapping for dmControl, refA, or refB.	Map dmControl, refA, and refB.
B702	1	The velocity ratio results in inadequate velocity resolution.	When using the configured velocity ratio, the velocity resolution in REFA16 is insufficient.	Change the velocity ratio.

E Cxxx: Script error

Error code	Error class	Description	Causes	Troubleshooting measures
C200	3	MD array number in script is out of range	MD array number in script is out of range The variables available for the MD data set are numbered 0...47.	Verify the script content.
C201	3	An error occurs while loading script from EEPROM	An error occurs while loading script from EEPROM.	Please restart the drive. Please perform a factory reset to the drive. Please contact the Technical Support.
C202	3	No executable script	No executable script.	Please re-download the script. Please contact the Technical Support.
C203	3	Script task execution timeout	There are too many script contents, and the script task cannot be completed in the Cycletime specified via the parameter P7-00 .	Increase the value of the parameter P7-00 or set the value of the parameter P7-00 to 0.
C204	3	Insufficient memory to save script to EEPROM	Insufficient memory to save script to EEPROM.	Verify and try to simplify the script content. Please contact the Technical Support.
C205	3	There is a divide-by-0 calculation in the script	There is a divide-by-0 calculation in the script.	Verify the script content.
C206	3	Timer time out of range in the script	Timer time out of range in the script. The timer supports a time range of 1...20000 ms.	Verify the script content.
C207	3	The script download tool version is too old	The script download tool version is too old.	Update the script download tool.

E Exxx: User-defined error in Script mode

Error code	Error class	Description	Causes	Troubleshooting measures
Exxx	3	User-defined error in Script mode	–	–

HMI displays incorrect characters.	Description
IIRQ	FATAL_ERR_ILLEGAL_IRQ Illegal interruption
DIRQ	FATAL_ERR_DEFAULT_IRQ Unsupported firmware interrupt occurred
WDOG	FATAL_ERR_WATCHDOG Watchdog
OPTR	FATAL_ERR_0PTR Uninitialized pointer
TIM0	FATAL_ERR_SCHEDULER0 Main loop task timeout of 2 ms
TIM1	FATAL_ERR_SCHEDULER1 1000us task timeout
TIM2	FATAL_ERR_SCHEDULER2 250us task timeout
TIM3	FATAL_ERR_SCHEDULER3 62,5Us task timeout
MEM0	FATAL_ERR_MEM0 Insufficient HEAP space
MEM1	FATAL_ERR_MEM1 HEAP space is locked. Unable to allocate memory space.
RAM2	FATAL_ERR_SHARED_RAM2 Partially shared RAM2 exceeds the limit.

Parameters

Parameter overview

- A parameter number is as follows

P0-00

Parameter set ____ ____ parameter number

- Items indicated by the [Correlation Mode]

P: Electronic gear mode (position mode)

S : Script (internal programming mode)

V: Profile Velocity

T: Profile Torque

MS: Motion sequence mode

Tz: Internal profile torque

Vz: Internal profile velocity

o: This control mode is supported.

-: This control mode is not supported

usr_p = Inc * P5-01/P5-02/131072

P0-Basic settings

No.	Designation	Correlation mode				
		P	S	V / Vz	T / Tz	MS
00	Operating mode	o	o	o	o	o
01	Adaptive mode selection	o	o	o	o	o
02	Adaptive stiffness level	o	o	o	o	o
03	Adaptive inertia ratio	o	o	o	o	o
04	Adaptive load type	o	o	o	o	o
05	Adaptive control mode selection	o	o	o	o	o
06	Motor rotation direction setting	o	o	o	o	o
07	High/Low velocity PTI pulse input channel	o	–	–	–	–
08	Type of reference value signal for PTI interface	o	–	–	–	–
09	Setting of PTI pulse low-pass filter	o	–	–	–	–
10	Selection of gear ratio	o	–	–	–	–
11	Denominator of gear ratio number 1	o	–	–	–	–
12	Numerator of gear ratio number 1	o	–	–	–	–
13	Denominator of gear ratio number 2	o	–	–	–	–
14	Numerator of gear ratio number 2	o	–	–	–	–
15	Processing mode for operating mode Electronic Gear.	o	–	–	–	–
16	Treatment of position changes with inactive power stage.	o	–	–	–	–
17	Velocity limitation for the method Position Synchronization.	o	–	–	–	–
18	Resolution of analog encoder output	o	o	o	o	o
19	Direction of analog encoder output	o	o	o	o	o
20	Analog encoder output type	o	o	o	o	o
21	Maximum load-dependent position deviation	o	o	–	–	o
22	Nominal power of external braking resistor	o	o	o	o	o
23	Resistance value of external braking resistor	o	o	o	o	o
24	Maximum permissible switch-on time of external braking resistor	o	o	o	o	o
25	Start external braking resistor	o	o	o	o	o

P1-Gain settings

No.	Designation	Correlation mode				
		P	S	V / Vz	T / Tz	MS
00	Control parameter set 1: Position controller P gain.	o	o	–	–	o
01	Control parameter set 1: Velocity controller P gain.	o	o	o	–	o
02	Control parameter set 1: Velocity controller integral action time.	o	o	o	–	o
03	Control parameter set 1: Velocity feed-forward control.	o	o	–	–	o
04	Control parameter set 1: Time constant of velocity loop command filter	o	o	o	–	o
05	Control parameter set 1: Filter time constant of the reference current value filter.	o	o	o	o	o
06	Control parameter set 1: Friction compensation gain	o	o	o	o	o
07	Control parameter set 2: Position controller P gain.	o	o	–	–	o
08	Control parameter set 2: Velocity controller P gain.	o	o	o	–	o
09	Control parameter set 2: Velocity controller integral action time.	o	o	o	–	o
10	Control parameter set 2: Velocity feed-forward control.	o	o	–	–	o
11	Control parameter set 2: Time constant of velocity loop command filter	o	o	o	–	o
12	Control parameter set 2: Filter time constant of the reference current value filter.	o	o	o	o	o
13	Control parameter set 2: Friction compensation gain	o	o	o	o	o
14	Control parameter set 3: Position controller P gain.	o	o	–	–	o
15	Control parameter set 3: Velocity controller P gain.	o	o	o	–	o
16	Control parameter set 3: Velocity controller integral action time.	o	o	o	–	o
17	Control parameter set 3: Time constant of velocity loop command filter	o	o	o	–	o
18	Control parameter set 3: Filter time constant of the reference current value filter.	o	o	o	o	o
19	Adaptive parameter integral action time 2	o	o	o	–	o
20	PID velocity controller: Differential gain	o	o	o	–	o
21	PID velocity controller: Time constant of D term smoothing filter	o	o	o	–	o
22	Time constant of velocity feed-forward filter	o	o	–	–	o
23	Acceleration feed-forward control	o	o	o	–	o
24	Time constant of acceleration feed-forward filter	o	o	o	–	o
25	Torque feed-forward control	o	o	o	o	o
26	Position command averaging filter	o	o	–	–	–
27	Time constant of position command averaging filter	o	o	–	–	o
28	Time constant of the position loop command low-pass filter	o	o	–	–	o
29	Moving average filtering of analog velocity commands	–	–	o	–	–
30	Linear friction compensation velocity limitation	o	o	o	o	o
31	Filter time constant to smooth velocity of motor	o	o	o	o	o
32	Maximum flux weakening current (d-axis)	o	o	o	o	o
33	Selection of control loop parameter set at power up.	o	o	o	o	o
34	Condition for switching of control parameter sets 1 and 2	o	o	o	o	o
35	Time window switching of control parameter sets 1 and 2	o	o	o	o	o
36	Position deviation for switching of control parameter sets 1 and 2	o	o	–	–	o
37	Velocity threshold for switching of control parameter sets 1 and 2	o	o	–	–	o
38	Time for switching between control parameter sets 1 and 2	o	o	o	o	o

P1-Gain settings (Continued)

No.	Designation	Correlation mode				
		P	S	V / Vz	T / Tz	MS
39	Adaptive stiffness switch: Adaptive stiffness switch mode	o	o	o	o	o
40	Adaptive stiffness switching: Adaptive stiffness switching time	o	o	o	o	o
41	Adaptive stiffness switching: Position error delay time	o	o	–	–	o
42	Adaptive stiffness switching: Position error threshold	o	o	–	–	o
43	Adaptive stiffness switching: Position error filter time constant	o	o	–	–	o
44	Adaptive stiffness switching: Low velocity time	o	o	o	–	o
45	Adaptive stiffness switching: Low velocity threshold	o	o	o	–	o
46	Adaptive stiffness switching: Gain optimization mode at low velocity	o	o	o	–	o
47	Adaptive stiffness switching: Target low stiffness	o	o	o	–	o
48	Adaptive stiffness switching: Steady-state duration	o	o	o	–	o
49	Advanced operating mode	o	o	o	o	o

P2-Vibration suppression settings

No.	Designation	Correlation mode				
		P	S	V / Vz	T / Tz	MS
00	Automatic notch filter mode selection	o	o	o	o	o
01	Notch filter 1: Damping.	o	o	o	o	o
02	Frequency of automatic notch filter 1	o	o	o	o	o
03	Notch filter 1: Bandwidth	o	o	o	o	o
04	Notch filter 2: Damping.	o	o	o	o	o
05	Frequency of automatic notch filter 2	o	o	o	o	o
06	Notch filter 2: Bandwidth	o	o	o	o	o
07	Control parameter set 1: Notch filter 1: Damping	o	o	o	o	o
08	Control parameter set 1: Notch filter 1: Frequency	o	o	o	o	o
09	Control parameter set 1: Notch filter 1: Bandwidth	o	o	o	o	o
10	Control parameter set 1: Notch filter 2: Damping	o	o	o	o	o
11	Control parameter set 1: Notch filter 2: Frequency	o	o	o	o	o
12	Control parameter set 1: Notch filter 2: Bandwidth	o	o	o	o	o
13	Control parameter set 1: Control parameter set 2: Overshoot suppression filter: Damping	o	o	o	o	o
14	Control parameter set 1: Control parameter set 2: Overshoot suppression filter: Time delay	o	o	o	o	o
15	Control parameter set 2: Notch filter 1: Damping	o	o	o	o	o
16	Control parameter set 2: Notch filter 1: Frequency	o	o	o	o	o
17	Control parameter set 2: Notch filter 1: Bandwidth	o	o	o	o	o
18	Control parameter set 2: Notch filter 2: Damping	o	o	o	o	o
19	Control parameter set 2: Notch filter 2: Frequency	o	o	o	o	o
20	Control parameter set 2: Notch filter 2: Bandwidth	o	o	o	o	o
21	Control parameter set 2: Control parameter set 2: Overshoot suppression filter: Damping	o	o	o	o	o
22	Control parameter set 2: Control parameter set 2: Overshoot suppression filter: Time delay	o	o	o	o	o
23	Number of vibration detection cycles for adaptive adjustment	o	o	o	o	o
24	Adaptive adjustment of vibration monitoring level	o	o	o	o	o
25	Adaptive adjustment of vibration detection delay	o	o	o	o	o
26	Suppression filter 1: Frequency	o	o	o	o	o
27	Suppression filter 1: Damping	o	o	o	o	o
28	Suppression filter 2: Frequency	o	o	o	o	o
29	Suppression filter 2: Damping	o	o	o	o	o

P3-I / O settings

No.	Designation	Correlation mode				
		P	S	V / Vz	T / Tz	MS
00	Function of input point DI0	o	o	o	o	o
01	Function of input point DI1	o	o	o	o	o
02	Function of input point DI2	o	o	o	o	o
03	Function of input point DI3	o	o	o	o	o
04	Function of input point DI4	o	o	o	o	o
05	Function of input point DI5	o	o	o	o	o
06	Function of input point DI6	o	o	o	o	o
07	Function of input point DI7	o	o	o	o	o
08	Function of input point DI8	o	o	o	o	o
09	Function of input point DI9	o	o	o	o	o
10	Function of input point DI10	o	o	o	o	o
11	Function of input point DI11	o	o	o	o	o
12	Debounce time of DI0	o	o	o	o	o
13	Debounce time of DI1	o	o	o	o	o
14	Debounce time of DI2	o	o	o	o	o
15	Debounce time of DI3	o	o	o	o	o
16	Debounce time of DI4	o	o	o	o	o
17	Debounce time of DI5	o	o	o	o	o
18	Debounce time of DI6	o	o	o	o	o
19	Debounce time of DI7	o	o	o	o	o
20	Debounce time of DI8	o	o	o	o	o
21	Debounce time of DI8	o	o	o	o	o
22	Debounce time of DI0	o	o	o	o	o
23	Debounce time of DI8	o	o	o	o	o
24	Function of output point DQ0	o	o	o	o	o
25	Function of DQ1	o	o	o	o	o
26	Function of output point DQ2	o	o	o	o	o
27	Function of output point DQ3	o	o	o	o	o
28	Function of output point DQ4	o	o	o	o	o
29	Function of output point DQ5	o	o	o	o	o
30	Function of output point DQ6	o	o	o	o	o
31	Analog input 1: Input function	–	–	o	o	–
32	Analog input 1: Time constant of input smoothing filter	–	–	o	o	–
33	Analog input 1: Voltage value is inversed	–	–	o	o	–
34	Analog input 1: Input offset value	–	–	o	o	–
35	Analog input 1: Use forced analog voltage input value	–	–	o	o	–
36	Analog input 1: Forced analog voltage input value	–	–	o	o	–
37	Analog input 1: Zero voltage deadband window	–	–	o	o	–
38	Analog input 2: Input function	–	–	o	o	–
39	Analog input 2: Time constant of input smoothing filter	–	–	o	o	–
40	Analog input 2: Voltage value is inversed	–	–	o	o	–

P3-I / O settings (Continued)

No.	Designation	Correlation mode				
		P	S	V / Vz	T / Tz	MS
41	Analog input 2: Input offset value	–	–	o	o	–
42	Analog input 2: Use forced analog voltage input value	–	–	o	o	–
43	Analog input 2: Forced analog voltage input value	–	–	o	o	–
44	Analog input 2: Zero voltage deadband window	–	–	o	o	–
45	Analog output 1: Output function	–	–	o	o	–
46	Analog output 1: Output gain	–	–	o	o	–
47	Analog output 1: Output format	–	–	o	o	–
48	Analog input 1: Voltage value is inversed	–	–	o	o	–
49	Analog output 1: Input offset value	–	–	o	o	–
50	Analog output 1: Forced output value	–	–	o	o	–
51	Analog output 2: Output function	–	–	o	o	–
52	Analog output 2: Output gain	–	–	o	o	–
53	Analog output 2: Output format	–	–	o	o	–
54	Analog input 2: Voltage value is inversed	–	–	o	o	–
55	Analog output 2: Input offset value	–	–	o	o	–
56	Analog output 2: Forced output value	–	–	o	o	–
57	Enabling the power stage at PowerOn.	o	o	o	o	o
58	Enabling the power stage as set via IO_ AutoEnable even after error.	o	o	o	o	o
59	Additional 'Fault Reset' for the signal input function 'Enable'.	o	o	o	o	o
60	Velocity limitation value to limit velocity by input point	o	o	o	o	o
61	Torque limitation via input	o	o	o	o	o
62	Pulse Clear (CCLR) mode	o	–	–	–	–
63	Target of operating mode switching	o	o	o	o	o

P4-Velocity and torque settings

No.	Designation	Correlation mode				
		P	S	V / Vz	T / Tz	MS
00	Activation of the motion profile for velocity.	o	o	o	–	–
01	Maximum velocity of internal motion of drive	o	o	o	–	–
02	Acceleration of the motion profile for velocity.	–	o	o	–	o
03	Deceleration of motion profile of the drive	–	o	o	–	o
04	S-curve setting of motion profile command for velocity	o	o	o	–	–
05	JOG velocity for slow movement.	o	o	o	o	–
06	JOG velocity for fast movement.	o	o	o	o	–
07	Analog input 1: Velocity command represented by the 10V analog input in Profile Velocity	–	–	o	–	–
08	Analog input 2: Velocity command represented by the 10V analog input in Profile Velocity	–	–	o	–	–
09	Internal velocity command 1 / Internal velocity limitation 1	–	–	o	o	–
10	Internal velocity command 2 / Internal velocity limitation 2	–	–	o	o	–
11	Internal velocity command 3 / Internal velocity limitation 3	–	–	o	o	–
12	Internal velocity command 4 / Internal velocity limitation 4	–	–	o	o	–
13	Internal velocity command 5 / Internal velocity limitation 5	–	–	o	o	–
14	Internal velocity command 6 / Internal velocity limitation 6	–	–	o	o	–
15	Internal velocity command 7 / Internal velocity limitation 7	–	–	o	o	–
16	Analog input 1: Velocity limitation represented by the 10V analog input	–	–	o	o	–
17	Analog input 2: Velocity limitation represented by the 10V analog input	–	–	o	o	–
18	Velocity limitation	o	o	o	o	o
19	Zero clamp mode	–	o	o	o	o
20	Velocity limit for Zero Clamp.	–	o	o	o	o
21	Time constant of smoothing filter in zero clamp mode	–	o	o	–	o
22	Slope setting of the motion profile for torque.	–	–	–	o	–
23	Activation of the motion profile for torque.	–	–	–	o	–
24	Analog input 1: Torque command represented by the 10V analog input in Profile Torque	–	–	–	o	–
25	Analog input 2: Torque command represented by the 10V analog input in Profile Torque	–	–	–	o	–
26	Internal torque command 1 / Internal torque limitation 1	–	–	o	o	-
27	Internal torque command 2 / Internal torque limitation 2	–	–	o	o	-
28	Internal torque command 3 / Internal torque limitation 3	–	–	o	o	–
29	Internal torque command 4 / Internal torque limitation 4	–	–	o	o	–
30	Internal torque command 5 / Internal torque limitation 5	–	–	o	o	–
31	Internal torque command 6 / Internal torque limitation 6	–	–	o	o	–
32	Internal torque command 7 / Internal torque limitation 7	–	–	o	o	–
33	Analog input 1: Torque limitation represented by the 10V analog input	–	–	o	o	–
34	Analog input 2: Torque limitation represented by the 10V analog input	–	–	o	o	–
35	Current limitation	o	o	o	o	o

P5-Extended settings

No.	Designation	Correlation mode				
		P	S	V / Vz	T / Tz	MS
00	Lock HMI	o	o	o	o	o
01	Denominator of internal position count unit (usr_p) conversion	o	o	o	o	o
02	Numerator of internal position count unit (usr_p) conversion	o	o	o	o	o
03	Target velocity for searching the switch.	o	o	o	o	o
04	Target velocity for moving away from switch.	o	o	o	o	o
05	Maximum search distance after over-travel of switch.	o	o	o	o	o
06	Maximum distance for search for switching point.	o	o	o	o	o
07	Distance from switching point	o	o	o	o	o
08	Position at reference point.	o	o	o	o	o
09	Homing mode	o	o	o	o	o
10	Offset motion distance 1	o	o	–	–	o
11	Offset motion distance 2	o	o	–	–	o
12	Target velocity of offset movements	o	o	–	–	o
13	Acceleration and deceleration of offset movement	o	o	–	–	o
14	Stop mode of Halt	o	o	o	o	o
15	Current for Halt	o	o	o	o	o
16	Quick Stop option code.	o	o	o	o	o
17	Deceleration ramp for Quick Stop	o	o	o	o	o
18	Current for Quick Stop.	o	o	o	o	o
19	Stop mode of the motor in case of the servo disabled or reporting error	o	o	o	o	o
20	Additional time delay for releasing the holding brake	o	o	o	o	o
21	Additional time delay for applying the holding brake.	o	o	o	o	o
22	Backlash compensation mode	o	o	–	–	o
23	Backlash compensation value	o	o	–	–	o
24	Backlash compensation processing time	o	o	–	–	o
25	Permissible direction of motor operation	o	o	o	o	o
26	RMAC movement: target position	o	–	o	o	–
27	RMAC movement: target velocity	o	–	o	o	–
28	RMAC movement: reaction when target position is overshot	o	–	o	o	–
29	RMAC movement: triggering the edge mode of signals	o	–	o	o	–

P6-Special settings

No.	Designation	Correlation mode				
		P	S	V / Vz	T / Tz	MS
00	Motor model	o	o	o	o	o
01	Motor encoder type	o	o	o	o	o
02	Device firmware version	o	o	o	o	o
03	Device firmware revision	o	o	o	o	o
04	Modbus address	o	o	o	o	o
05	Modbus communication baud rate	o	o	o	o	o
06	Modbus communication data format	o	o	o	o	o
07	Error number of the monitoring output 1	o	o	o	o	o
08	Error number of the monitoring output 2	o	o	o	o	o
09	Warning number of the monitoring output 1	o	o	o	o	o
10	Warning number of the monitoring output 2	o	o	o	o	o
11	Activation of software limit switches	o	o	–	–	o
12	Behavior when position limit is reached.	o	o	o	o	o
13	Positive position limit for software limit switch	o	o	–	–	o
14	Negative position limit for software limit switch	o	o	–	–	o
15	Standstill window, permissible control deviation.	o	o	–	–	o
16	Standstill window, time	o	o	–	–	o
17	Timeout time for standstill window monitoring.	o	o	–	–	o
18	Velocity window, permissible deviation	–	o	o	–	o
19	Velocity window, time	–	o	o	–	o
20	Torque window, permissible deviation	–	–	–	o	–
21	Torque window, time.	–	–	–	o	–
22	Position monitoring: position following error range 1	o	o	–	–	o
23	Position monitoring: Output mode 1 of position deviation monitoring	o	o	–	–	o
24	Position monitoring: position following error range 2	o	o	–	–	o
25	Position monitoring: Output mode 2 of position deviation monitoring	o	o	–	–	o
26	Position monitoring: time window.	o	o	–	–	o
27	Monitoring of velocity deviation.	–	o	o	–	o
28	Monitoring of velocity threshold	–	o	o	–	o
29	Velocity monitoring: Monitoring window time	–	o	o	–	o
30	Torque monitoring: Torque monitoring threshold	–	–	o	–	–
31	Torque monitoring: Monitoring window time	–	–	o	–	–
32	Advisory limit of the load-dependent position deviation (error class 0).	o	o	–	–	o
33	Error response to excessively high load-dependent position deviation	o	o	–	–	o
34	Maximum load-dependent velocity deviation	o	o	o	–	o
35	Time window for maximum load-dependent velocity deviation.	o	o	o	–	o
36	Error response to excessively high load-dependent velocity deviation	o	o	o	–	o
37	Error response to analog 1 channel disconnection	–	–	o	o	–
38	Error response to 100% I2t braking resistor.	o	o	o	o	o
39	Current command saturation alarm time	o	o	o	o	o
40	Fault masking	o	o	o	o	o

P6-Special settings (Continued)

No.	Designation	Correlation mode				
		P	S	V / Vz	T / Tz	MS
41	Setting of special functions	o	o	o	o	o
42	Maximum motor velocity during enable of power stage output	o	o	o	o	o
43	Maximum load factor of motor current at a standstill	o	o	o	o	o
44	Maximum continuous current load factor during motor operation	o	o	o	o	o

P7 - user-defined monitoring parameters

No.	Designation	Correlation mode				
		P	S	V / Vz	T / Tz	MS
00	Scan cycle in internal programming mode	–	o	–	–	–
01	Program version No. in internal programming mode	–	o	–	–	–
02	Motion Sequence task set: HMI entry parameters	–	–	–	–	o
03	Motion Sequence: Start condition for the start of a sequence via a signal input.	–	–	–	–	o
04	Motion Sequence: Selection of the data set number after the end of a sequence.	–	–	–	–	o
05	Motion Sequence: Response to falling edge at signal input for 'Start Signal Data Set'.	–	–	–	–	o
08	User-defined monitoring parameter address 0	o	o	o	o	o
09	User-defined monitoring parameter address 1	o	o	o	o	o
10	User-defined monitoring parameter address 2	o	o	o	o	o
11	User-defined monitoring parameter address 3	o	o	o	o	o
12	User-defined monitoring parameter address 4	o	o	o	o	o
13	User-defined monitoring parameter address 5	o	o	o	o	o
14	User-defined monitoring parameter address 6	o	o	o	o	o
15	User-defined monitoring parameter address 7	o	o	o	o	o
16	User-defined monitoring parameter address 8	o	o	o	o	o
17	User-defined monitoring parameter address 9	o	o	o	o	o

Pu user-defined internal programming parameters

No.	Designation	Correlation mode				
		P	S	V / Vz	T / Tz	MS
00	User-defined parameter 0 in internal programming mode	–	o	–	–	–
01	User-defined parameter 1 in internal programming mode	–	o	–	–	–
02	User-defined parameter 2 in internal programming mode	–	o	–	–	–
03	User-defined parameter 3 in internal programming mode	–	o	–	–	–
04	User-defined parameter 4 in internal programming mode	–	o	–	–	–
05	User-defined parameter 5 in internal programming mode	–	o	–	–	–
06	User-defined parameter 6 in internal programming mode	–	o	–	–	–
07	User-defined parameter 7 in internal programming mode	–	o	–	–	–
08	User-defined parameter 8 in internal programming mode	–	o	–	–	–
09	User-defined parameter 9 in internal programming mode	–	o	–	–	–
10	User-defined parameter 10 in internal programming mode	–	o	–	–	–
11	User-defined parameter 11 in internal programming mode	–	o	–	–	–
12	User-defined parameter 12 in internal programming mode	–	o	–	–	–
13	User-defined parameter 13 in internal programming mode	–	o	–	–	–
14	User-defined parameter 14 in internal programming mode	–	o	–	–	–
15	User-defined parameter 15 in internal programming mode	–	o	–	–	–
16	User-defined parameter 16 in internal programming mode	–	o	–	–	–
17	User-defined parameter 17 in internal programming mode	–	o	–	–	–
18	User-defined parameter 18 in internal programming mode	–	o	–	–	–
19	User-defined parameter 19 in internal programming mode	–	o	–	–	–
20	User-defined parameter 20 in internal programming mode	–	o	–	–	–
21	User-defined parameter 21 in internal programming mode	–	o	–	–	–
22	User-defined parameter 22 in internal programming mode	–	o	–	–	–
23	User-defined parameter 23 in internal programming mode	–	o	–	–	–

Internal motion task set

No.	Designation	Correlation mode				
		P	S	V / Vz	T / Tz	MS
00	Motion Sequence task set: task type	–	–	–	–	o
01	Motion Sequence task set: Variable A	–	–	–	–	o
02	Motion Sequence task set: Variable B	–	–	–	–	o
03	Motion Sequence task group: Variable C	–	–	–	–	o
04	Motion Sequence task group: Variable D	–	–	–	–	o
05	Motion Sequence task group: Switching method	–	–	–	–	o
06	Motion Sequence task set: Next task set	–	–	–	–	o
07	Motion Sequence task set: Switching condition 1	–	–	–	–	o
08	Motion Sequence task set: Set value of switching condition 1	–	–	–	–	o
09	Motion Sequence task set: Logical operators of switching condition	–	–	–	–	o
10	Motion Sequence task set: Switching condition 2	–	–	–	–	o
11	Motion Sequence task set: Set value of switching condition 2	–	–	–	–	o

P0 - Basic settings

P0-00	Operating mode	Minimum value	0	Unit	Related control mode		
		Factory setting	3	–	P	V / Vz	T / Tz
		Maximum value	9		MS	S	–

Parameter function: **MODBUS address: 1286**

Operating mode

1 / Profile Torque T: Profile torque

2 / Profile Velocity V: Profile velocity.

3 / Gear: Electronic gear mode.

6 / Motion sequence: Internal motion task mode.

7 / Script: Script programming mode.

8 / Profile Torque with Internal Command Tz: Internal Profile Torque.

9 / Profile Velocity with Internal Command Vz: Internal Profile Velocity

Setting can only be modified if power stage is disabled.

Modified settings become active the next time the product is powered on.

P0-01	Adaptive mode selection	Minimum value	0	Unit	Related control mode		
		Factory setting	2	–	P	V / Vz	T / Tz
		Maximum value	8		MS	S	–

Parameter function: **MODBUS address: 5386**

Adaptive mode selection

0 / Invalid: The adaptive operating mode is invalid and the serial PID control loop parameters via the parameter set P1 are used.

1 / Standard: In the standard adaptive operating mode, the servo drive automatically measures the system inertia ratio, the stiffness level is set manually, and adaptive control loop parameters are used.

2 / Passive: In the passive adaptive operating mode, the system inertia ratio and the stiffness level are set manually, and adaptive control loop parameters are used.

3 / Adaptive: In the active adaptive operating mode, the servo drive automatically measures the system inertia ratio, and tries to automatically set the best stiffness level (increase up to 4 stiffness levels); adaptive control loop parameters are used.

4 / Reset: Reset commissioning parameters.

6 / ATT: Enable ATT algorithm full-feature mode.

7 / ATT Lite: Enable the core functional mode of the ATT algorithm.

Modified settings become active immediately.

P0-02	Adaptive stiffness level	Minimum value	1	Unit	Related control mode		
		Factory setting	14	–	P	V / Vz	T / Tz
		Maximum value	32		MS	S	–

Parameter function: **MODBUS address: 5378**

Adaptive stiffness level

Set the system stiffness level when using the adaptive control loop and combine with the inertia ratio via the parameter P0-03 when the mode via the parameter P0-01 is set to 1, 2 or 3 to jointly control the system response.

When the parameter P0-01 is set to 1 or 2, the value via this parameter needs to be set manually.

When the parameter P0-01 is set to 3, the system attempts to automatically set the best stiffness level (increase up to 4 stiffness levels). As the set value becomes higher, the system response becomes faster, but vibration and noise are likely to occur. As the set value becomes lower, the system response becomes slower, but vibration and noise are unlikely to occur.

Modified settings become active immediately.

P0-03	Adaptive inertia ratio	Minimum value	10	Unit	Related control mode		
		Factory setting	350	0.01	P	V / Vz	T / Tz
		Maximum value	10000		MS	S	–

Parameter function: **MODBUS address: 5388**

Adaptive inertia ratio

Set the system inertia ratio when using the adaptive control loop, which combines with the adaptive stiffness level via the parameter P0-02 when the mode via the parameter P0-01 is set to 1, 2 or 3 to jointly control the system response.

When the parameter P0-01 is set to 1 or 3, the value via this parameter is automatically measured by the system.

When the parameter P0-01 is set to 1 or 2, the value via this parameter needs to be set manually.

The parameter unit is 0.01 Arms

Modified settings become active immediately.

P0-04	Adaptive load type	Minimum value	0	Unit	Related control mode		
		Factory setting	1	–	P	V / Vz	T / Tz
		Maximum value	4		MS	S	–

Parameter function: **MODBUS address: 5384**

Adaptive load type

0 / Rotary Disk: Rotary disk load

1 / Ball Screw: Ball screw load

2 / Belt: Belt type load.

3 / Large Inertia: Large inertia load.

Setting can only be modified if power stage is disabled.

Modified settings become active immediately.

P0-05	Adaptive control mode selection	Minimum value	0	Unit	Related control mode		
		Factory setting	0	–	P	V / Vz	T / Tz
		Maximum value	2		MS	S	–

Parameter function: **MODBUS address: 5380**

Adaptive control mode selection

0 / Standard Mode (Table 1): Standard mode, balancing overshoot and steady-state time.

1 / Positioning Mode (Table 2): Mode of position prioritized, the integral time used by the control loop parameters is longer, and there is no overshoot during positioning.

Modified settings become active immediately.

P0-06	Motor rotation direction setting	Minimum value	0	Unit	Related control mode		
		Factory setting	0	–	P	V / Vz	T / Tz
		Maximum value	1		MS	S	–

Parameter function: **MODBUS address: 1560**

Motor rotation direction setting

0 / Inversion Off: Disable the inversion of the direction of rotation of the motor.

1 / Inversion On: Enable the inversion of the direction of rotation of the motor.

Setting can only be modified if power stage is disabled.

Modified settings become active immediately.

P0-07	High/Low velocity PTI pulse input channel	Minimum value	0	Unit	Related control mode		
		Factory setting	0	–	P	–	–
		Maximum value	1		–	–	–

Parameter function: **MODBUS address: 1398**

0 / Low velocity PTI input.

1 / High velocity PTI input.

Setting can only be modified if power stage is disabled.

Modified settings become active immediately.

P0-08	Type of reference value signal for PTI interface	Minimum value	0	Unit	Related control mode		
		Factory setting	1	–	P	–	–
		Maximum value	3		–	–	–

Parameter function: **MODBUS address: 1284**

Type of reference value signal for PTI interface

0 / A / B signals: Signals ENC_A and ENC_B (quadruple evaluation).

1 / P / D signals

2 / Signals clockwise / counter-clockwise

3 / Reservation.

Setting can only be modified if power stage is disabled.

Modified settings become active the next time the product is powered on.

P0-09	Setting of PTI pulse low-pass filter	Minimum value	0	Unit	Related control mode		
		Factory setting	0	–	P	–	–
		Maximum value	8000		–	–	–

Parameter function: **MODBUS address: 1374**

Setting of PTI pulse low-pass filter

0 / Without filter: Invalid low-pass filter.

8000 / 8000 kHz: The low-pass filter has a cutoff frequency of 8000 kHz.

2000 / 2000 kHz: The low-pass filter has a cutoff frequency of 2000 kHz.

1000 / 1000 kHz: The low-pass filter has a cutoff frequency of 1000 kHz.

500 / 500 kHz: The low-pass filter has a cutoff frequency of 500 kHz.

250 / 250 kHz: The low-pass filter has a cutoff frequency of 250 kHz.

125 / 125 kHz: The low-pass filter has a cutoff frequency of 125 kHz.

50 / 50 kHz: The low-pass filter has a cutoff frequency of 50 kHz.

When the PTI signal type set in the parameter P0-08 is [0 / A / B Signals], the minimum value of this parameter should start from [250/250 kHz] because the A/B Signals carry 4 times the frequency.

Setting can only be modified if power stage is disabled.

Modified settings become active the next time the product is powered on.

P0-10	Selection of gear ratio	Minimum value	0	Unit	Related control mode		
		Factory setting	8	–	P	–	–
		Maximum value	11		–	–	–

Parameter function: **MODBUS address: 9740**

Select the electronic gear ratio directly

0 / Calculation by numerator / denominator: calculation of electronic gear ratio by numerator / denominator

1 / 200

2 / 400

3 / 500

4 / 1000

5 / 2000

6 / 4000

7 / 5000

8 / 10000

9 / 4096

10 / 8192

11 / 16384

Modified settings become active immediately.

P0-11	Denominator of gear ratio number 1	Minimum value	1	Unit	Related control mode		
		Factory setting	10000	–	P	–	–
		Maximum value	2147483647		–	–	–

Parameter function: **MODBUS address: 9734**

Denominator of gear ratio number 1

Electronic gear ratio = P0-12 / P0-11.

The internal calculation pulse equivalent of the servo drive is 131072 counts per turn

Actual number of turns* 131072 = number of input PTI pulses * P0-12 / P0-11.

Modified settings become active immediately.

P0-12	Numerator of gear ratio number 1	Minimum value	-2147483648	Unit	Related control mode		
		Factory setting	131072	–	P	–	–
		Maximum value	2147483647		–	–	–

Parameter function: **MODBUS address: 9736**

Numerator of gear ratio number 1

See parameters P0-11.

Modified settings become active immediately.

P0-13	Denominator of gear ratio number 2	Minimum value	1	Unit	Related control mode		
		Factory setting	10000	–	P	–	–
		Maximum value	2147483647		–	–	–

Parameter function: **MODBUS address: 9752**

Denominator of gear ratio number 2

See parameters P0-11.

Modified settings become active immediately.

P0-14	Numerator of gear ratio number 2	Minimum value	-2147483648	Unit	Related control mode		
		Factory setting	131072	–	P	–	–
		Maximum value	2147483647		–	–	–

Parameter function: **MODBUS address: 9754**

Numerator of gear ratio number 2

See parameters P0-11.

Modified settings become active immediately.

P0-15	Processing mode for operating mode Electronic Gear.	Minimum value	1	Unit	Related control mode		
		Factory setting	1	–	P	–	–
		Maximum value	3		–	–	–

Parameter function: **MODBUS address: 1326**

Processing mode for operating mode Electronic Gear.

1 / Position synchronization without compensation movement

2 / Position synchronization with compensation movement

Velocity synchronization

Modified settings become active the next time the motor moves.

P0-16	Treatment of position changes with inactive power stage.	Minimum value	0	Unit	Related control mode		
		Factory setting	0	–	P	–	–
		Maximum value	1		–	–	–

Parameter function: **MODBUS address: 9750**

Treatment of position changes with inactive power stage.

0 / Off: Position changes in states with disabled power stage are ignored.

1 / On: Position changes in states with disabled power stage are taken into account.

This setting has an effect only if gear processing is started in the mode 'Synchronization with compensation movement'.

Modified settings become active the next time the motor moves.

P0-17	Speed limitations of position synchronization method	Minimum value	0	Unit	Related control mode		
		Factory setting	0	usr_v	P	–	–
		Maximum value	2147483647		–	–	–

Parameter function: **MODBUS address: 9746**

Speed limitations of position synchronization method

Value = 0: No velocity limitation.

Value > 0: Value >0: Velocity limitation in usr_v

Modified settings become active immediately.

P0-18	Resolution of analog encoder output	Minimum value	8	Unit	Related control mode		
		Factory setting	10000	EncInc	P	V / Vz	T / Tz
		Maximum value	4294967295		MS	S	–

Parameter function: **MODBUS address: 1380**

Resolution of analog encoder output

It defines the number of analog pulses output by the servo driver for one revolution the motor (A/B phase quadrature signal with 4x frequency). For each revolution of the motor, the servo driver outputs an Index signal.

Setting can only be modified if power stage is disabled.

Modified settings become active the next time the product is powered on.

P0-19	Direction of analog encoder output	Minimum value	0	Unit	Related control mode		
		Factory setting	0	–	P	V / Vz	T / Tz
		Maximum value	1		MS	S	–

Parameter function: **MODBUS address: 1682**

Direction of analog encoder output

0/Inversion Off: Inversion Off: The direction of analog encoder output is the same as that of the motor's rotation.

1/Inversion On: The direction of analog encoder output is opposite to that of the motor's rotation.

Setting can only be modified if power stage is disabled.

Modified settings become active the next time the product is powered on.

P0-20	Analog encoder output type	Minimum value	0	Unit	Related control mode		
		Factory setting	1	–	P	V / Vz	T / Tz
		Maximum value	3		MS	S	–

Parameter function: **MODBUS address: 1342**

0 / Off: PTO interface disabled

1 / Esim pAct Enc: Encoder simulation based on actual position of encoder

2 / Esim pRef: Encoder simulation based on reference position (_p_ref)

3 / Esim PTI: Directly the signal from PTI interface

Setting can only be modified if power stage is disabled.

Modified settings become active the next time the motor moves.

P0-21	Maximum load-dependent position deviation.	Minimum value	1	Unit	Related control mode		
		Factory setting	393216	usr_p	P	–	–
		Maximum value	2147483647		MS	S	–

Parameter function: **MODBUS address: 1660**

Maximum load-dependent position deviation.

The load-dependent position deviation is the difference between the reference position and the actual position caused by the load.

Modified settings become active immediately.

P0-22	Nominal power of external braking resistor	Minimum value	S1: 400 S2: 600 S3: 1500	Unit	Related control mode		
		Factory setting	10	W	P	V / Vz	T / Tz
		Maximum value	32767		MS	S	–

Parameter function: **MODBUS address: 1316**

P0-22(MAX)=P0-23(current value)*A

A: S1 is 10, S2 is 30, S3 is 100

It is recommended not to exceed the drive power.

Setting can only be modified if power stage is disabled.

Modified settings become active the next time the motor moves.

P0-23	Resistance value of external braking resistor	Minimum value	S1: 40 S2: 20 S3: 15	Unit	Related control mode		
		Factory setting	10000	0.01 Ohm	P	V / Vz	T / Tz
		Maximum value	32767		MS	S	–

Parameter function: **MODBUS address: 1318**

Resistance value of external braking resistor

In increments of 0.01 Arms

Setting can only be modified if power stage is disabled.

Modified settings become active the next time the motor moves.

P0-24	Maximum permissible switch-on time of external braking resistor	Minimum value	1	Unit	Related control mode		
		Factory setting	100	1 ms	P	V / Vz	T / Tz
		Maximum value	30000		MS	S	–

Parameter function: **MODBUS address: 1314**

Maximum permissible switch-on time of external braking resistor

Setting can only be modified if power stage is disabled.

Modified settings become active the next time the motor moves.

P0-25	Enabling the external braking resistor	Minimum value	0	Unit	Related control mode		
		Factory setting	0	–	P	V / Vz	T / Tz
		Maximum value	1		MS	S	–

Parameter function: **MODBUS address: 1298**

Whether to enable the external braking resistor

0 / Internal Braking Resistor

1 / External Braking Resistor

Setting can only be modified if power stage is disabled.

Modified settings become active the next time the motor moves.

P0-27	*RTATU_ATGEN*	Minimum value	0	Unit	Related control mode		
		Factory setting	0	–	P	V / Vz	T / Tz
		Maximum value	1		MS	S	–

Parameter function: **MODBUS address: 5410**

0 / Adaptive Trajectory Guider: Disable

1 / Adaptive Trajectory Guider: Enable

P1 - Gain settings

P1-00	Control parameter set 1 Position controller P gain.	Minimum value	20	Unit	Related control mode		
		Factory setting	650	0.1 1/s	P	–	–
		Maximum value	9000		MS	S	–

Parameter function: **MODBUS address: 4614**

Control parameter set 1 Position controller P gain.

In increments of 1 0.1 1/s

Modified settings become active immediately.

P1-01	Control parameter set 1: Velocity controller P gain.	Minimum value	1	Unit	Related control mode		
		Factory setting	1	0.0001 A/min^{-1}	P	V / Vz	–
		Maximum value	25400		MS	S	–

Parameter function: **MODBUS address: 4610**

Control parameter set 1 Velocity controller P gain.

In increments of 1 0.0001 A/(1/min).

Modified settings become active immediately.

P1-02	Control parameter set 1: Velocity controller integral action time.	Minimum value	0	Unit	Related control mode		
		Factory setting	1600	0.01 ms	P	V / Vz	–
		Maximum value	32767		MS	S	–

Parameter function: **MODBUS address: 4612**

Control parameter set 1 Velocity controller integral action time.

In increments of 0.01 ms.

Modified settings become active immediately.

P1-03	Control parameter set 1: Velocity feed-forward control.	Minimum value	0	Unit	Related control mode		
		Factory setting	550	0.1%	P	–	–
		Maximum value	2000		MS	S	–

Parameter function: **MODBUS address: 4620**

Control parameter set 1 Velocity feed-forward control.

In increments of 0.1%.

In the ATT algorithm, the position loop tracking compensation coefficient is used. The larger the value, the smaller the Perr (tracking error), while maintaining the shape of the velocity curve.

When the value is sufficiently large, Perr (tracking error) = 0 can be achieved during the constant velocity phase.

Modified settings become active immediately.

P1-04	Control parameter set 1: Time constant of velocity loop command filter	Minimum value	0	Unit	Related control mode		
		Factory setting	0	0.01 ms	P	V / Vz	–
		Maximum value	32767		MS	S	–

Parameter function: **MODBUS address: 4616**

The low-pass filter of the velocity loop command can be used to attenuate the high-frequency noise on the velocity loop command, thereby reducing the velocity fluctuation.

In increments of 0.01 ms.

Modified settings become active immediately.

P1-05	Control parameter set 1: Filter time constant of the reference current value filter.	Minimum value	0	Unit	Related control mode		
		Factory setting	10	0.01 ms	P	V / Vz	T / Tz
		Maximum value	400		MS	S	–

Parameter function: **MODBUS address: 4618**

Control parameter set 1 Filter time constant of the reference current value filter.

In increments of 0.01 ms.

Modified settings become active immediately.

P1-06	Control parameter set 1: Friction compensation gain	Minimum value	0	Unit	Related control mode		
		Factory setting	0	0.01 Arms	P	V / Vz	T / Tz
		Maximum value	1000		MS	S	–

Parameter function: **MODBUS address: 4640**

Control parameter set 1 Friction compensation gain

In increments of 0.01 Arms

Modified settings become active immediately.

P1-07	Control parameter set 2: Position controller P gain.	Minimum value	20	Unit	Related control mode		
		Factory setting	650	0.1 1/s	P	–	–
		Maximum value	9000		MS	S	–

Parameter function: **MODBUS address: 4870**

Control parameter set 2: Position controller P gain.

In increments of 1 0.1 1/s

Modified settings become active immediately.

P1-08	Control parameter set 2: Velocity controller P gain.	Minimum value	1	Unit	Related control mode		
		Factory setting	1	0.0001 A/min^{-1}	P	V / Vz	–
		Maximum value	25400		MS	S	–

Parameter function: **MODBUS address: 4866**

Control parameter set 2: Velocity controller P gain.

In increments of 1 0.0001 A/(1/min).

Modified settings become active immediately.

P1-09	Control parameter set 2: Velocity controller integral action time.	Minimum value	0	Unit	Related control mode		
		Factory setting	1600	0.01 ms	P	V / Vz	–
		Maximum value	32767		MS	S	–

Parameter function: **MODBUS address: 4868**

Control parameter set 2: Velocity controller integral action time.

In increments of 0.01 ms.

Modified settings become active immediately.

P1-10	Control parameter set 2: Velocity feed-forward control.	Minimum value	0	Unit	Related control mode		
		Factory setting	550	0.1%	P	–	–
		Maximum value	2000		MS	S	–

Parameter function: **MODBUS address: 4876**

Control parameter set 2 Velocity feed-forward control.

In increments of 0.1 %.

Modified settings become active immediately.

P1-11	Control parameter set 2: Time constant of velocity loop command filter	Minimum value	0	Unit	Related control mode		
		Factory setting	0	0.01 ms	P	V / Vz	–
		Maximum value	32767		MS	S	–

Parameter function: **MODBUS address: 4872**

The low-pass filter of the velocity loop command can be used to attenuate the high-frequency noise on the velocity loop command, thereby reducing the velocity fluctuation.

In increments of 0.01 ms.

Modified settings become active immediately.

P1-12	Control parameter set 2: Filter time constant of the reference current value filter.	Minimum value	0	Unit	Related control mode		
		Factory setting	10	0.01 ms	P	V / Vz	T / Tz
		Maximum value	400		MS	S	–

Parameter function: **MODBUS address: 4874**

Control parameter set 2 Filter time constant of the reference current value filter.

In increments of 0.01 ms.

Modified settings become active immediately.

P1-13	Control parameter set 2: Friction compensation gain	Minimum value	0	Unit	Related control mode		
		Factory setting	0	0.01 Arms	P	V / Vz	T / Tz
		Maximum value	1000		MS	S	–

Parameter function: **MODBUS address: 4896**

Control parameter set 2 Friction compensation gain

In increments of 0.01 Arms

Modified settings become active immediately.

P1-14	Control parameter set 3: Position controller P gain.	Minimum value	20	Unit	Related control mode		
		Factory setting	200	0.1 1/s	P	–	–
		Maximum value	9000		MS	S	–

Parameter function: **MODBUS address: 5126**

Control parameter set 3 Position controller P gain.

In increments of 1 0.1 1/s

Modified settings become active immediately.

P1-15	Control parameter set 3: Velocity controller P gain.	Minimum value	1	Unit	Related control mode		
		Factory setting	1	0.0001 A/min^{-1}	P	V / Vz	–
		Maximum value	25400		MS	S	–

Parameter function: **MODBUS address: 5122**

Control parameter set 3 Velocity controller P gain.

In increments of 1 0.0001 A/(1/min).

Modified settings become active immediately.

P1-16	Control parameter set 3: Velocity controller integral action time.	Minimum value	0	Unit	Related control mode		
		Factory setting	4000	0.01 ms	P	V / Vz	–
		Maximum value	32767		MS	S	–

Parameter function: **MODBUS address: 5124**

Control parameter set 3 Velocity controller integral action time.

In increments of 0.01 ms.

Modified settings become active immediately.

P1-17	Control parameter set 3: Time constant of velocity loop command filter	Minimum value	0	Unit	Related control mode		
		Factory setting	0	0.01 ms	P	V / Vz	–
		Maximum value	32767		MS	S	–

Parameter function: **MODBUS address: 5128**

Control parameter set 3: Time constant of velocity loop command filter

In increments of 0.01 ms.

Modified settings become active immediately.

P1-18	Control parameter set 3: Filter time constant of the reference current value filter.	Minimum value	0	Unit	Related control mode		
		Factory setting	10	0.01 ms	P	V / Vz	T / Tz
		Maximum value	400		MS	S	–

Parameter function: **MODBUS address: 5130**

Control parameter set 3 Filter time constant of the reference current value filter.

In increments of 0.01 ms.

Modified settings become active immediately.

P1-19	Adaptive parameter integral action time 2	Minimum value	0	Unit	Related control mode		
		Factory setting	5000	0.01 ms	P	V / Vz	–
		Maximum value	32767		MS	S	–

Parameter function: **MODBUS address: 5398**

Velocity loop integral time for the adaptive operating mode of position prioritized

When the adaptive control optimization mode set via the parameter P0-05 is [1/Standard Mode (Table 1)], the value of this parameter can be used to override the default velocity loop integral time.

Value = 0: The corresponding default velocity loop integral time (100 ms) is used in the mode of position prioritized.

Value > 0: Velocity loop integral time set by this parameter in the mode of position prioritized.

The setting of this parameter is active when the operating mode set via the parameter P0-01 is [1 - Standard, 2 - Passive or 3 - Adaptive].

In increments of 0.01 ms.

Modified settings become active immediately.

P1-20	PID velocity controller: Differential gain	Minimum value	0	Unit	Related control mode		
		Factory setting	0	0.1%	P	V / Vz	–
		Maximum value	4000		MS	S	–

Parameter function: **MODBUS address: 4364**

PID velocity controller: D gain

In increments of 0.1 %.

Modified settings become active immediately.

P1-21	PID velocity controller: Time constant of D term smoothing filter	Minimum value	1	Unit	Related control mode		
		Factory setting	25	0.01 ms	P	V / Vz	–
		Maximum value	1000		MS	S	–

Parameter function: **MODBUS address: 4362**

PID velocity controller: PID velocity controller: Time constant of D gain smoothing filter

In increments of 0.01 ms.

Modified settings become active immediately.

P1-22	Time constant of velocity feed-forward filter	Minimum value	0	Unit	Related control mode		
		Factory setting	0	0.01 ms	P	–	–
		Maximum value	25600		MS	S	–

Parameter function: **MODBUS address: 4470**

Time constant of velocity feed-forward filter

In increments of 0.01 ms.

Modified settings become active immediately.

P1-23	Acceleration feed-forward control	Minimum value	0	Unit	Related control mode		
		Factory setting	0	0.1%	P	V / Vz	–
		Maximum value	30000		MS	S	–

Parameter function: **MODBUS address: 4372**

Acceleration feed-forward control

In increments of 0.1%.

Modified settings become active immediately.

P1-24	Time constant of acceleration feed-forward filter	Minimum value	0	Unit	Related control mode		
		Factory setting	0	0.01 ms	P	V / Vz	–
		Maximum value	25600		MS	S	–

Parameter function: **MODBUS address: 4472**

Time constant of acceleration feed-forward filter

In increments of 0.01 ms.

Modified settings become active immediately.

P1-25	Torque feed-forward control	Minimum value	0	Unit	Related control mode		
		Factory setting	0	0.1%	P	V / Vz	T / Tz
		Maximum value	1000		MS	S	–

Parameter function: **MODBUS address: 4386**

Load feed-forward control

In increments of 0.1%.

Modified settings become active immediately.

P1-26	Position command averaging filter	Minimum value	0	Unit	Related control mode		
		Factory setting	1	–	P	–	–
		Maximum value	1		–	S	–

Parameter function: **MODBUS address: 9742**

0/ Disable: Disable the position command averaging filter.

1/ Enable: Enable the position command averaging filter

Setting can only be modified if power stage is disabled.

Modified settings become active the next time the motor moves.

P1-27	Time constant of position command averaging filter	Minimum value	0	Unit	Related control mode		
		Factory setting	0	1 ms	P	–	–
		Maximum value	128		MS	S	–

Parameter function: **MODBUS address: 1562**

Time constant of position command averaging filter

Modified settings become active immediately.

P1-28	Time constant of the position loop command low-pass filter	Minimum value	0	Unit	Related control mode		
		Factory setting	0	0.01 ms	P	–	–
		Maximum value	25600		MS	S	–

Parameter function: **MODBUS address: 4448**

Time constant of the position loop command low-pass filter

This parameter is active for both velocity loop feed-forward and acceleration feed-forward.

In increments of 0.01 ms.

Modified settings become active immediately.

P1-29	Moving average filtering of analog velocity commands	Minimum value	0	Unit	Related control mode		
		Factory setting	0	0.1 ms	–	V / Vz	–
		Maximum value	128		–	–	–

Parameter function: **MODBUS address: 4476**

Moving average filtering of analog velocity commands

When the analog input voltage is used as the velocity command, the fast transformation of the analog input voltage velocity command is smoothed by the moving averaging filter function.

The use of a moving average filter introduces a hysteresis into the analog input voltage velocity command.

Modified settings become active the next time the motor moves.

P1-30	Linear friction compensation velocity limitation	Minimum value	0	Unit	Related control mode		
		Factory setting	5	usr_v	P	V / Vz	T / Tz
		Maximum value	20		MS	S	–

Parameter function: **MODBUS address: 4370**

Speed of rotation up to which the the friction compensation is linear

Speed of rotation up to which friction compensation increases linearly.

Modified settings become active immediately.

P1-31	Filter time constant to smooth velocity of motor	Minimum value	0	Unit	Related control mode		
		Factory setting	10	0.01 ms	P	V / Vz	T / Tz
		Maximum value	3000		MS	S	–

Parameter function: **MODBUS address: 4368**

Motor velocity feedback smoothing filter time constant

In increments of 0.01 ms.

Modified settings become active immediately.

P1-32	Flux weakening function	Minimum value	0	Unit	Related control mode		
		Factory setting	0	–	P	V / Vz	T / Tz
		Maximum value	1		MS	S	–

Parameter function: **MODBUS address: 4382**

Flux weakening function enabled or disabled

0: Disable the function: Flux weakening function disabled.

1: Enable the function: Flux weakening function enabled.

V0201.13 and later versions support this function.

Setting can only be modified if power stage is disabled.

Modified settings become active the next time the motor moves.

P1-33	Selection of control loop parameter set at power up.	Minimum value	0	Unit	Related control mode		
		Factory setting	1	–	P	V / Vz	T / Tz
		Maximum value	2		MS	S	–

Parameter function: **MODBUS address: 4400**

Selection of control loop parameter set at power up.

0 / Switching Condition: The switching condition is used for control loop parameter set switch.

1 / Control loop parameter set 1: Control loop parameter set 1 is used

2 / Control loop parameter set 2: Control loop parameter set 1 is used

Modified settings become active immediately.

P1-34	Condition for switching of control parameter sets 1 and 2	Minimum value	0	Unit	Related control mode		
		Factory setting	0	–	P	V / Vz	T / Tz
		Maximum value	4		MS	S	–

Parameter function: **MODBUS address: 4404**

Condition for switching of control parameter sets 1 and 2

0 / None or digital input: None or digital input function selected

1 / Inside position deviation: Inside position deviation (value definition in parameter CLSET_p_DiffWin)

2 / Below Reference Velocity: Below reference velocity (value definition in parameter CLSET_v_Threshol)

3 / Below Actual velocity: Below actual velocity (value definition in parameter CLSET_v_Threshol)

4 / Reserved: Reserved

In the case of parameter set switching, the values of the following parameters are changed gradually:

P1-00 / P1-07

P1-01 / P1-08

P1-02 / P1-09

P1-03 / P1-10

P1-04 / P1-11

P1-05 / P1-12

The following parameters are changed immediately after the time for parameter set switching (CTRL_ParChgTime):

P2-07 / P2-15

P2-08 / P2-16

P2-09 / P2-17

P2-10 / P2-18

P2-11 / P2-19

P2-12 / P2-20

P2-13 / P2-21

P2-14 / P2-22

P1-06 / P1-13

Modified settings become active immediately.

P1-35	Time window switching of control parameter sets 1 and 2	Minimum value	0	Unit	Related control mode		
		Factory setting	0	1 ms	P	V / Vz	T / Tz
		Maximum value	1000		MS	S	–

Parameter function: **MODBUS address: 4406**

Time window switching of control parameter sets 1 and 2

Value = 0: Window monitoring deactivated.

Value > 0: Window time for the parameter P1-36 and P1-37.

Modified settings become active immediately.

P1-36	Position deviation for switching of control parameter sets 1 and 2	Minimum value	0	Unit	Related control mode		
		Factory setting	1310	usr_p	P	–	–
		Maximum value	2147483647		MS	S	–

Parameter function: **MODBUS address: 4426**

Position deviation for switching of control parameter sets 1 and 2

If the position deviation of the position controller is less than the value of this parameter when the switching condition set via the parameter P1-34 is [1/Inside Position Deviation], control loop parameter set 2 is used. Otherwise, control loop parameter set 1 is used.

Modified settings become active immediately.

P1-37	Velocity threshold for switching of control parameter sets 1 and 2	Minimum value	0	Unit	Related control mode		
		Factory setting	50	usr_v	P	–	–
		Maximum value	2147483647		MS	S	–

Parameter function: **MODBUS address: 4410**

Velocity threshold for switching of control parameter sets 1 and 2

If the reference velocity is less than the value of this parameter when the switching condition set via the parameter P1-34 is [2 / Below Reference Velocity], control loop parameter set 2 is used. Otherwise, control loop parameter set 1 is used.

If the actual velocity is less than the value of this parameter when the switching condition set via the parameter P1-34 is [2 / Below Actual Velocity], control loop parameter set 2 is used. Otherwise, control loop parameter set 1 is used.

Modified settings become active immediately.

P1-38	Time for switching between control parameter sets 1 and 2	Minimum value	0	Unit	Related control mode		
		Factory setting	0	1 ms	P	V / Vz	T / Tz
		Maximum value	2000		MS	S	–

Parameter function: **MODBUS address: 4392**

Time for switching between control parameter sets 1 and 2

Modified settings become active immediately.

P1-39	Adaptive stiffness switch: Adaptive stiffness switching mode	Minimum value	0	Unit	Related control mode		
		Factory setting	0	–	P	V / Vz	T / Tz
		Maximum value	3		MS	S	–

Parameter function: **MODBUS address: 4450**

Adaptive stiffness switch: Adaptive stiffness switch mode

0 / Dynamic Stiffness Switching Disable

1 / Dynamic Stiffness Switching No Ramp

2 / Dynamic Stiffness Switching Deep Sleep Mode

3 / Dynamic Stiffness Switching With Ramp

When the parameter set via the parameter P0-01 is [0 / Invalid] and the adaptive stiffness switching conditions are met, the following parameters will be switched according to the mode set via this parameter:

P1-00 / P1-14

P1-01 / P1-15

P1-02 / P1-16

P1-05 / P1-18

When the parameter set via the parameter P0-01 is [1 / Standard, 2 / Passive or 3 / Adaptive], and the adaptive stiffness switching conditions are met, the following parameters will be switched according to the mode set via this parameter:

P0-02 / P1-47

When the parameter via this parameter is [2/Dynamic Stiffness Switching Deep Sleep Mode], and the control parameter set is switched to the control loop parameter set 3, the parameter will be further switched to half of value via control loop parameter set 3.

Modified settings become active immediately.

P1-40	Adaptive stiffness switch: Time of adaptive stiffness switching	Minimum value	0	Unit	Related control mode		
		Factory setting	0	0.1 ms	P	V / Vz	T / Tz
		Maximum value	2000		MS	S	–

Parameter function: **MODBUS address: 4452**

The control parameter set will be gradually switched within the time set via this parameter when the switching condition set via the parameter P1-39 is [3/Dynamic Stiffness Switching With Ramp] and the stiffness switching conditions are met.

In increments of 0.1 ms.

Modified settings become active immediately.

P1-41	Adaptive stiffness switch: Position deviation delay	Minimum value	0	Unit	Related control mode		
		Factory setting	20	0.1 ms	P	–	–
		Maximum value	2000		MS	S	–

Parameter function: **MODBUS address: 4454**

Adaptive stiffness switching: Position deviation delay

The condition of adaptive stiffness switching position deviation is met when the motion command is completed (electronic gear or internal motion), and the position deviation is lower than the position deviation threshold set via the parameter P1-42 and exceeds the time set via this parameter.

Modified settings become active immediately.

P1-42	Adaptive stiffness switch: Position deviation threshold	Minimum value	2	Unit	Related control mode		
		Factory setting	50	0.1 deg	P	–	–
		Maximum value	100		MS	S	–

Parameter function: **MODBUS address: 4456**

Adaptive stiffness switching: Position deviation threshold

The condition of adaptive stiffness switching position deviation is met when the motion command is completed (electronic gear or internal motion), and the position deviation is lower than the position deviation threshold set via this parameter and exceeds the time set via parameter P1-42 .

In increments of 0.1 Arms.

Modified settings become active immediately.

P1-43	Adaptive stiffness switch: Time constant of position deviation filter	Minimum value	0	Unit	Related control mode		
		Factory setting	100	0.1 ms	P	–	–
		Maximum value	2000		MS	S	–

Parameter function: **MODBUS address: 4458**

Adaptive stiffness switching: Time constant of position deviation filter

In increments of 0.1 ms.

Modified settings become active immediately.

P1-44	Adaptive stiffness switch: Low velocity time	Minimum value	0	Unit	Related control mode		
		Factory setting	20	0.1 ms	P	V / Vz	–
		Maximum value	2000		MS	S	–

Parameter function: **MODBUS address: 4460**

Adaptive stiffness switching: Low velocity time

The adaptive stiffness switching velocity condition is met when the actual velocity is lower than the low velocity threshold set via the parameter P1-45 and exceeds the time set via this parameter.

In increments of 0.1 ms.

Modified settings become active immediately.

P1-45	Adaptive stiffness switch: Low velocity threshold	Minimum value	0	Unit	Related control mode		
		Factory setting	20	usr_v	P	V / Vz	–
		Maximum value	100		MS	S	–

Parameter function: **MODBUS address: 4462**

Adaptive stiffness switching: Low velocity threshold

The adaptive stiffness switching velocity condition is met when the actual velocity is lower than the low velocity threshold set via the parameter P1-44 and exceeds the time set via this parameter.

Modified settings become active immediately.

P1-46	Adaptive stiffness switch: Gain optimization mode at low velocity	Minimum value	0	Unit	Related control mode		
		Factory setting	0	–	P	V / Vz	–
		Maximum value	1		MS	S	–

Parameter function: **MODBUS address: 4466**

Adaptive stiffness switching: Gain optimization mode at low velocity

0 / Position And Velocity: Switch when both the position condition and the velocity condition of adaptive stiffness switching are met.

1 / Position Or Velocity: Switch the position loop gain separately when the adaptive stiffness switching position condition is met, and switch the velocity loop gain separately when the adaptive stiffness switching velocity condition is met.

Modified settings become active immediately.

P1-47	Adaptive stiffness switch: Target low stiffness	Minimum value	1	Unit	Related control mode		
		Factory setting	10	–	P	V / Vz	–
		Maximum value	32		MS	S	–

Parameter function: **MODBUS address: 4464**

Adaptive stiffness switching: Target low stiffness

When the parameter set via the parameter P0-01 is [1 / Standard, 2 / Passive or 3 / Adaptive], and the adaptive stiffness switching conditions are met, the following parameters will be switched according to the mode set via P1-39.

Modified settings become active immediately.

P1-48	Adaptive stiffness switch: Steady-state duration	Minimum value	0	Unit	Related control mode		
		Factory setting	0	0.1 ms	P	V / Vz	–
		Maximum value	2000		MS	S	–

Parameter function: **MODBUS address: 4468**

In the adaptive mode, set the time threshold for the motor to be at a steady-state standstill.

Modified settings become active immediately.

P1-49	Advanced operating mode	Minimun value	0	Unit	Relevant operating mode		
		Factory setting	0	–	P	V / Vz	T / Tz
		Maximum value	–		MS	S	–

Parameter function: **MODBUS address: 4474**

Internal reservation

Modified settings become active immediately.

P1-50	*CTRL1_FLUXWEAKENGAIN*	Minimun value	0	Unit	Relevant operating mode		
		Factory setting	50	%	P	V / Vz	T / Tz
		Maximum value	100		MS	S	–

Parameter function: **MODBUS address: 4674**

This corresponds to the PI value calculation for the flux weaken loop (similar to the concept of stiffness). Increasing this value enhances the response to d-axis commands, while decreasing it slows the response to d-axis commands.

P1-51	*CTRL1_FLUXWEAKENFILTERTAU*	Minimun value	0	Unit	Relevant operating mode		
		Factory setting	4	ms	P	V / Vz	T / Tz
		Maximum value	30		MS	S	–

Parameter function: **MODBUS address: 4676**

In applications with significant speed fluctuations, increasing this value can reduce oscillations. Generally, this parameter does not require modification.

NOTE: Higher values do not necessarily improve stability. If mismatched with the control system, excessive filtering may also cause oscillations.

P1-52	*CTRL1_FLUXWEAKENVOLTHRD*	Minimun value	90	Unit	Relevant operating mode		
		Factory setting	100	%	P	V / Vz	T / Tz
		Maximum value	100		MS	S	–

Parameter function: **MODBUS address: 4678**

When modifying this parameter, the value of Obj 7548.112 changes. Weak field calculation is triggered when the voltage usage value exceeds this variable's value.

- When flux weaken instability occurs, prioritize adjusting this parameter.
- Increasing this parameter delays the initiation of flux weaken calculation; decreasing it advances the initiation of flux weaken calculation.

P1-53	*CTRL1_ATGGain*	Minimun value	100	Unit	Relevant operating mode		
		Factory setting	1000	1/s	P	V / Vz	T / Tz
		Maximum value	10000		MS	S	–

Parameter function: **MODBUS address: 4642**

Set ATG Second Filter Parameters

P1-54	*CTRL1_ATGZeta*	Minimun value	500	Unit	Relevant operating mode		
		Factory setting	1000	%	P	V / Vz	T / Tz
		Maximum value	2000		MS	S	–

Parameter function: **MODBUS address: 4644**

Set ATG Second Filter Parameters

P1-57	*CTRL1_ATT_SPDLOOPFR*	Minimun value	10	Unit	Relevant operating mode		
		Factory setting	80	–	P	V / Vz	T / Tz
		Maximum value	5		MS	S	–

Parameter function: **MODBUS address: 4646**

This parameter sets the tracking capability of the speed loop, equivalent to its stiffness. The commonly used range is 20...80, with stiffness gradually increasing from 80 to 20.

P1-58	*CTRL1_ATT_SPDPRECOMPCOEF*	Minimun value	-1000	Unit	Relevant operating mode		
		Factory setting	0	0.1%	P	V / Vz	T / Tz
		Maximum value	10000		MS	S	–

Parameter function: **MODBUS address: 4648**

The unit of this parameter is percentage.

Value = 0: No compensation.

Value > 0: The larger the value, the closer $N^{act\ (actual\ speed)}$ approaches $N^{ref\ (target\ speed)}$, resulting in better tracking performance and stronger system rigidity.

Value < 0: The larger the value, the further $N^{act\ (actual\ speed)}$ deviates from $N^{ref\ (target\ speed)}$, resulting in poorer tracking performance and weaker system rigidity.

When the value is 1000, $N^{act\ (actual\ speed)}$ theoretically coincides with $N^{ref\ (target\ speed)}$.

When the value exceeds 1000, $N^{act\ (actual\ speed)}$ may theoretically exceed $N^{ref\ (target\ speed)}$.

The effectiveness of this parameter adjustment also requires coordination with the current loop low-pass filter. A smaller low-pass filter value yields better results.

P1-59	*CTRL1_ATT_KPPGAINFORPASSIVE*	Minimun value	0	Unit	Relevant operating mode		
		Factory setting	1000	0.1%	P	V / Vz	T / Tz
		Maximum value	3000		MS	S	–

Parameter function: **MODBUS address: 4652**

The KPp scale value is expressed as a percentage.

A value of 1000 indicates no compensation.

This parameter is only effective in ATT Passive mode.

In Passive mode, KPp = KPp_Passive * scale / 1000.

Since KPp is automatically calculated, adjusting this parameter allows modification of the position loop gain.

P1-60	*CTRL1_ATT_POSENDINGCOEFPOS*	Minimun value	0	Unit	Relevant operating mode		
		Factory setting	0	–	P	V / Vz	T / Tz
		Maximum value	1000		MS	S	–

Parameter function: **MODBUS address: 4654**

Forward Motion Acceleration Damping Coefficient, unit: per thousand, ranging from 0...1000.

This parameter accelerates the convergence speed during position control stop without altering system stiffness. Higher values result in faster convergence. Excessively high values may cause speed overshoot.

This parameter is effective only in position mode.

P1-61	*CTRL1_ATT_POSENDINGCOEFNEG*	Minimun value	0	Unit	Relevant operating mode		
		Factory setting	0	–	P	V / Vz	T / Tz
		Maximum value	1000		MS	S	–

Parameter function: **MODBUS address: 4656**

Reverse Motion Acceleration Damping Coefficient, unit: per thousand, ranging from 0...1000.

This parameter accelerates the convergence speed during position control stop without altering system stiffness. Higher values result in faster convergence. Excessively high values may cause speed overshoot.

This parameter is effective only in position mode.

P1-62	*CTRL1_ATT_POSENDINGRATIO*	Minimun value	0	Unit	Relevant operating mode		
		Factory setting	100	–	P	V / Vz	T / Tz
		Maximum value	100		MS	S	–

Parameter function: **MODBUS address: 4658**

Tail Convergence Smoothness, unit: percentage, ranging from 1...100.

The default value is 100.

When this value is less than 100, the motor converges quickly during high-speed deceleration but slowly during low-speed deceleration. This enables the motor to transition to a stopped state at a smoother speed.

This parameter is only effective in position mode when the tail convergence coefficient function is enabled.

P1-63	*CTRL1_ATT_PERRTHRES*	Minimun value	0	Unit	Relevant operating mode		
		Factory setting	300	–	P	V / Vz	T / Tz
		Maximum value	65535		MS	S	–

Parameter function: **MODBUS address: 4660**

Tail Position Error Integral Threshold

When the position error is less than this value, the position error integral is automatically activated.

P1-64	*CTRL1_ATT_PERRINTEGGAINPOS*	Minimun value	0	Unit	Relevant operating mode		
		Factory setting	0	–	P	V / Vz	T / Tz
		Maximum value	32767		MS	S	–

Parameter function: **MODBUS address: 4662**

Tail Position Error Integral Coefficient (Forward) Unit: ms

Setting to 0 disables the forward integral function.

P1-65	*CTRL1_ATT_PERRINTEGGAINNEG*	Minimun value	0	Unit	Relevant operating mode		
		Factory setting	0	–	P	V / Vz	T / Tz
		Maximum value	32767		MS	S	–

Parameter function: **MODBUS address: 4664**

Tail Position Error Integral Coefficient (Reverse) Unit: ms

Setting to 0 disables the reverse integral function.

P1-66	*CTRL1_ATT_LOWSPDTHRESHOLD*	Minimun value	1	Unit	Relevant operating mode		
		Factory setting	50	–	P	V / Vz	T / Tz
		Maximum value	500		MS	S	–

Parameter function: **MODBUS address: 4666**

Low-Speed Integral Speed Threshold

When actual speed falls below this value, the speed error integral automatically activates.

P1-67	*CTRL1_ATT_LOWSPDINTEGGAINPOS*	Minimun value	0	Unit	Relevant operating mode		
		Factory setting	0	–	P	V / Vz	T / Tz
		Maximum value	32767		MS	S	–

Parameter function: **MODBUS address: 4668**

Low-Speed Speed Integration Coefficient (Forward) Unit: ms

When using this parameter, TNn also functions. It is recommended to set TNn=0.

P1-68	*CTRL1_ATT_LOWSPDINTEGGAINNEG*	Minimun value	0	Unit	Relevant operating mode		
		Factory setting	0	–	P	V / Vz	T / Tz
		Maximum value	32767		MS	S	–

Parameter function: **MODBUS address: 4670**

Tail Position Error Integral Coefficient (Reverse) Unit: ms

Setting to 0 disables the reverse integral function.

P1-69	*CTRL1_ATT_SPECIALCONF*	Minimun value	0	Unit	Relevant operating mode		
		Factory setting	0	–	P	V / Vz	T / Tz
		Maximum value	65535		MS	S	–

Parameter function: **MODBUS address: 4672**

Dicing Machine Specific Parameters

Bit0: Disable PTI compensation algorithm → 0x01 (Disabled)

Bit1: Reserved

Bit3/2: Position protection bit for die bonding machines

- 00 Do not enable position range protection
- 01 Motor index point ±60 degrees or more protection
- 10 Motor index point protection for angles exceeding ±180 degrees

When the motor's rotational position exceeds the set range, alarm E1B11 is triggered.

Bit4: Runaway Protection Enabled → Default enabled, 0x10 (disabled)

Runaway protection includes:

- Excessive position slip protection
- Severe inertia mismatch protection (insufficient inertia)

  NOTE: Speed Deviation Overrange Protection, use the following settings:
  - P6-34 Speed Overrange Threshold
  - P6-35 Speed Overrange Duration

P1-70	*CTRL1_FricModeSelect*	Minimun value	0	Unit	Relevant operating mode		
		Factory setting	0	-	P	V / Vz	T / Tz
		Maximum value	4		MS	S	–

Parameter function: **MODBUS address: 4680**

Friction Compensation Function Activated:

- When Mode 1 is selected, friction force is calculated based on the reference speed and a static friction + sliding friction model.
- When Mode 2 is selected, friction force is calculated based on the actual speed and a static friction + sliding friction model.
- When Mode 3 is selected, friction force is calculated based on the reference speed and a simplified Strebick model.
- When Mode 4 is selected, friction force is calculated based on the actual speed and a simplified Strebick model.

P1-71	*CTRL1_FricPosStatic*	Minimun value	0	Unit	Relevant operating mode		
		Factory setting	0	%	P	V / Vz	T / Tz
		Maximum value	50		MS	S	–

Parameter function: **MODBUS address: 4682**

Positive Static Friction Compensation

P1-72	*CTRL1_FricNegStatic*	Minimun value	0	Unit	Relevant operating mode		
		Factory setting	0	%	P	V / Vz	T / Tz
		Maximum value	50		MS	S	–

Parameter function: **MODBUS address: 4684**

Negative Static Friction Compensation

P1-73	*CTRL1_FricBeta*	Minimun value	0	Unit	Relevant operating mode		
		Factory setting	0	%	P	V / Vz	T / Tz
		Maximum value	50		MS	S	–

Parameter function: **MODBUS address: 4686**

Slope of Linear Partial Friction Compensation

P1-74	*CTRL1_FricSpdThd*	Minimun value	0	Unit	Relevant operating mode		
		Factory setting	0	rpm	P	V / Vz	T / Tz
		Maximum value	1000		MS	S	–

Parameter function: **MODBUS address: 4688**

The inflection point position of the compensation model, where the inflection point corresponds to 60% of the static friction torque.

P1-76	*CTRL1_DobEnable*	Minimun value	0	Unit	Relevant operating mode		
		Factory setting	0	-	P	V / Vz	T / Tz
		Maximum value	1		MS	S	–

Parameter function: **MODBUS address: 4692**

0/DOB Disturbance Compensation: Disable

1/DOB Disturbance Compensation: Enable

P1-77	*CTRL1_DobGain*	Minimun value	500	Unit	Relevant operating mode		
		Factory setting	1000	Hz	P	V / Vz	T / Tz
		Maximum value	3000		MS	S	–

Parameter function: **MODBUS address: 4694**

If P1-77 is reduced, the bandwidth of the DOB is lowered, slowing the convergence speed of the DOB observer and accelerating the speed drop.

If P1-77 is increased, the bandwidth of the DOB is raised, accelerating the convergence speed of the DOB observer and slowing the speed drop (though not indefinitely), while potentially causing speed ripple.

P1-78	*CTRL1_DobFilter*	Minimun value	0	Unit	Relevant operating mode		
		Factory setting	1	ms	P	V / Vz	T / Tz
		Maximum value	100		MS	S	–
Parameter function:			**MODBUS address: 4696**				
Adjust the compensation effect of Feedforward.							

P1-80	*CTRLG2_ATT_DVS_THRES*	Minimun value	0	Unit	Relevant operating mode		
		Factory setting	20	user_v	P	V / Vz	T / Tz
		Maximum value	1000		MS	S	–
Parameter function:			**MODBUS address: 17946**				
ATT algorithm: the speed threshold for damping vibration suppression.							

P2 - Vibration suppression setting

P2-00	Automatic notch filter mode selection	Minimum value	0	Unit	Related control mode		
		Factory setting	0	–	P	V / Vz	T / Tz
		Maximum value	5		MS	S	–

Parameter function: **MODBUS address: 5390**

Selection of adaptive notch filter mode

0 / Invalid: Automatic notch filter is not automatically set, and the parameters of the adaptive notch filter remain unchanged.

1 / Enable 1: Enable adaptive notch filter 1.

2 / Enable 2: Enable adaptive notch filters 1 and 2.

3 / Reset: Reset adaptive notch filters 1 and 2.

4 / Enable 1 and turn off: Recognize 1 resonance point, enable 1 notch filter and turn off resonance point detection.

5 / Enable 2 and turn off: Recognize 2 resonance points, enable 2 notch filters and turn off resonance point detection.

Modified settings become active immediately.

P2-01	Notch filter 1: Damping	Minimum value	550	Unit	Related control mode		
		Factory setting	900	0.1%	P	V / Vz	T / Tz
		Maximum value	990		MS	S	–

Parameter function: **MODBUS address: 4428**

Notch filter 1: Damping

In increments of 0.1%.

Modified settings become active immediately.

P2-02	Frequency of automatic notch filter 1	Minimum value	500	Unit	Related control mode		
		Factory setting	15000	0.1 Hz	P	V / Vz	T / Tz
		Maximum value	15000		MS	S	–

Parameter function: **MODBUS address: 4430**

Frequency of automatic notch filter 1

In increments of 0.1 Hz.

Modified settings become active immediately.

P2-03	Notch filter 1: Bandwidth	Minimum value	10	Unit	Related control mode		
		Factory setting	700	0.1%	P	V / Vz	T / Tz
		Maximum value	900		MS	S	–

Parameter function: **MODBUS address: 4432**

Notch filter 1: Bandwidth

In increments of 0.1%.

Modified settings become active immediately.

P2-04	Notch filter 2: Damping	Minimum value	550	Unit	Related control mode		
		Factory setting	900	0.1%	P	V / Vz	T / Tz
		Maximum value	990		MS	S	–

Parameter function: **MODBUS address: 4434**

Notch filter 2: Damping

In increments of 0.1%.

Modified settings become active immediately.

P2-05	Frequency of automatic notch filter 2	Minimum value	500	Unit	Related control mode		
		Factory setting	15000	0.1 Hz	P	V / Vz	T / Tz
		Maximum value	15000		MS	S	–

Parameter function: **MODBUS address: 4436**

Frequency of automatic notch filter 2

In increments of 0.1 Hz.

Modified settings become active immediately.

P2-06	Notch filter 2: Bandwidth	Minimum value	10	Unit	Related control mode		
		Factory setting	700	0.1%	P	V / Vz	T / Tz
		Maximum value	900		MS	S	–

Parameter function: **MODBUS address: 4438**

Notch filter 2: Bandwidth

In increments of 0.1%.

Modified settings become active immediately.

P2-07	Control parameter set 1: Notch filter 1: Damping.	Minimum value	550	Unit	Related control mode		
		Factory setting	900	0.1%	P	V / Vz	T / Tz
		Maximum value	990		MS	S	–

Parameter function: **MODBUS address: 4624**

Control parameter set 1: Notch filter 1: Damping

In increments of 0.1%.

Modified settings become active immediately.

P2-08	Control parameter set 1: Notch filter 1: Frequency	Minimum value	500	Unit	Related control mode		
		Factory setting	15000	0.1 Hz	P	V / Vz	T / Tz
		Maximum value	15000		MS	S	–

Parameter function: **MODBUS address: 4626**

Control parameter set 1: Notch filter 1: Frequency

In increments of 0.1 Hz.

Modified settings become active immediately.

P2-09	Control parameter set 1: Notch filter 1: Bandwidth	Minimum value	10	Unit	Related control mode		
		Factory setting	700	0.1%	P	V / Vz	T / Tz
		Maximum value	900		MS	S	–

Parameter function: **MODBUS address: 4628**

Control parameter set 1: Notch filter 1: Bandwidth

In increments of 0.1%.

Modified settings become active immediately.

P2-10	Control parameter set 1: Notch filter 2: Damping	Minimum value	550	Unit	Related control mode		
		Factory setting	900	0.1%	P	V / Vz	T / Tz
		Maximum value	990		MS	S	–

Parameter function: **MODBUS address: 4630**

Control parameter set 1: Notch filter 2: Damping.

In increments of 0.1%.

Modified settings become active immediately.

P2-11	Control parameter set 1: Notch filter 2: Frequency	Minimum value	500	Unit	Related control mode		
		Factory setting	15000	0.1 Hz	P	V / Vz	T / Tz
		Maximum value	15000		MS	S	–

Parameter function: **MODBUS address: 4632**

Control parameter set 1: Notch filter 2: Frequency.

In increments of 0.1 Hz.

Modified settings become active immediately.

P2-12	Control parameter set 1: Notch filter 2: Bandwidth	Minimum value	10	Unit	Related control mode		
		Factory setting	700	0.1%	P	V / Vz	T / Tz
		Maximum value	900		MS	S	–

Parameter function: **MODBUS address: 4634**

Control parameter set 1: Notch filter 2: Bandwidth.

In increments of 0.1%.

Modified settings become active immediately.

P2-13	Control parameter set 1: Control parameter set 2: Overshoot suppression filter: Damping	Minimum value	0	Unit	Related control mode		
		Factory setting	0	0.1%	P	V / Vz	T / Tz
		Maximum value	500		MS	S	–

Parameter function: **MODBUS address: 4636**

Control parameter set 1: overshoot suppression filter: Damping

In increments of 0.1%.

Modified settings become active immediately.

P2-14	Control parameter set 1: Control parameter set 2: Overshoot suppression filter: Time delay	Minimum value	0	Unit	Related control mode		
		Factory setting	0	0.01 ms	P	V / Vz	T / Tz
		Maximum value	7500		MS	S	–

Parameter function: **MODBUS address: 4638**

Control parameter set 1: Delay of overshoot suppression filters

In increments of 0.01 ms.

Modified settings become active immediately.

P2-15	Control parameter set 2: Notch filter 1: Damping	Minimum value	550	Unit	Related control mode		
		Factory setting	900	0.1%	P	V / Vz	T / Tz
		Maximum value	990		MS	S	–

Parameter function: **MODBUS address: 4880**

Control parameter set 2: Notch filter 1: Damping.

In increments of 0.1%.

Modified settings become active immediately.

P2-16	Control parameter set 2: Notch filter 1: Frequency	Minimum value	500	Unit	Related control mode		
		Factory setting	15000	0.1 Hz	P	V / Vz	T / Tz
		Maximum value	15000		MS	S	–

Parameter function: **MODBUS address: 4882**

Control parameter set 2: Notch filter 1: Frequency.

In increments of 0.1 Hz.

Modified settings become active immediately.

P2-17	Control parameter set 2: Notch filter 1: Bandwidth	Minimum value	10	Unit	Related control mode		
		Factory setting	700	0.1%	P	V / Vz	T / Tz
		Maximum value	900		MS	S	–

Parameter function: **MODBUS address: 4884**

Control parameter set 2: Notch filter 1: Bandwidth.

In increments of 0.1%.

Modified settings become active immediately.

P2-18	Control parameter set 2: Notch filter 2: Damping	Minimum value	550	Unit	Related control mode		
		Factory setting	900	0.1%	P	V / Vz	T / Tz
		Maximum value	990		MS	S	–

Parameter function: **MODBUS address: 4886**

Control parameter set 2: Notch filter 2: Damping

In increments of 0.1%.

Modified settings become active immediately.

P2-19	Control parameter set 2: Notch filter 2: Frequency	Minimum value	500	Unit	Related control mode		
		Factory setting	15000	0.1 Hz	P	V / Vz	T / Tz
		Maximum value	15000		MS	S	–

Parameter function: **MODBUS address: 4888**

Control parameter set 2: Notch filter 2: Frequency

In increments of 0.1 Hz.

Modified settings become active immediately.

P2-20	Control parameter set 2: Notch filter 2: Bandwidth	Minimum value	10	Unit	Related control mode		
		Factory setting	700	0.1%	P	V / Vz	T / Tz
		Maximum value	900		MS	S	–

Parameter function: **MODBUS address: 4890**

Control parameter set 2: Notch filter 2: Bandwidth

In increments of 0.1%.

Modified settings become active immediately.

P2-21	Control parameter set 2: Control parameter set 2: Overshoot suppression filter: Damping	Minimum value	0	Unit	Related control mode		
		Factory setting	0	0.1%	P	V / Vz	T / Tz
		Maximum value	500		MS	S	–

Parameter function: **MODBUS address: 4892**

Control parameter set 2: overshoot suppression filter: Damping

In increments of 0.1%.

Modified settings become active immediately.

P2-22	Control parameter set 2: Control parameter set 2: Overshoot suppression filter: Time delay	Minimum value	0	Unit	Related control mode		
		Factory setting	0	0.01 ms	P	V / Vz	T / Tz
		Maximum value	7500		MS	S	–

Parameter function: **MODBUS address: 4894**

Control parameter set 2: Delay of overshoot suppression filters

In increments of 0.01 ms.

Modified settings become active immediately.

P2-23	Number of vibration detection cycles for adaptive adjustment	Minimum value	0	Unit	Related control mode		
		Factory setting	2	–	P	V / Vz	T / Tz
		Maximum value	10		MS	S	–

Parameter function: **MODBUS address: 5392**

Number of vibration detection cycles for adaptive adjustment

Modified settings become active immediately.

P2-24	Adaptive adjustment of vibration monitoring level	Minimum value	0	Unit	Related control mode		
		Factory setting	20	usr_v	P	V / Vz	T / Tz
		Maximum value	100		MS	S	–

Parameter function: **MODBUS address: 5394**

Adaptive adjustment of vibration monitoring level

Modified settings become active immediately.

P2-25	Adaptive adjustment of vibration detection delay	Minimum value	0	Unit	Related control mode		
		Factory setting	100	0.1 ms	P	V / Vz	T / Tz
		Maximum value	1000		MS	S	–

Parameter function: **MODBUS address: 5396**

Adaptive notch filter vibration detection delay

In increments of 0.1 ms.

Modified settings become active immediately.

P2-26	Suppression filter 1: Frequency	Minimum value	0	Unit	Related control mode		
		Factory setting	0	0.1 Hz	P	V / Vz	T / Tz
		Maximum value	2000		MS	S	–

Parameter function: **MODBUS address: 4440**

Suppression filter 1: Frequency

In increments of 0.1 Hz.

Modified settings become active immediately.

P2-27	Suppression filter 1: Damping	Minimum value	0	Unit	Related control mode		
		Factory setting	300	0.1%	P	V / Vz	T / Tz
		Maximum value	500		MS	S	–

Parameter function: **MODBUS address: 4444**

Suppression filter 1: Damping

In increments of 0.1%.

Modified settings become active immediately.

P2-28	Suppression filter 2: Frequency	Minimum value	0	Unit	Related control mode		
		Factory setting	0	0.1 Hz	P	V / Vz	T / Tz
		Maximum value	2000		MS	S	–

Parameter function: **MODBUS address: 4442**

Suppression filter 2: Frequency

In increments of 0.1 Hz.

Modified settings become active immediately.

P2-29	Suppression filter 2: Damping	Minimum value	0	Unit	Related control mode		
		Factory setting	300	0.1%	P	V / Vz	T / Tz
		Maximum value	500		MS	S	–

Parameter function:	MODBUS address: 4446
Suppression filter 2: Damping In increments of 0.1%. **Modified settings become active immediately.**	

P3 - I / O settings

P3-00	Function of input point DI0	Minimum value	1	Unit	Related control mode		
		Factory setting	(Related to mode)	–	P	V / Vz	T / Tz
		Maximum value	150		MS	S	–

Parameter function: **MODBUS address: 1794**

Function of input point DI0

Function name	Function description	Function value		Related control mode				
		Normally open	Normally closed	P	S	V / Vz	T / Tz	MS
Freely Available	Not assigned	1	–	√	√	√	√	√
Fault Reset	Fault reset	2	102	√	√	√	√	√
Enable	Driver is enabled	3	103	√	√	√	√	√
Halt	Halt	4	104	√	√	√	√	√
Current Limitation	Starting current limitation	6	106	√	√	√	√	√
Zero Clamp	Zero clamp	7	107	√	√	√	√	√
Velocity Limitation	Starting velocity limitation	8	108	√	√	√	√	√
JOG Positive	Jog positive	9	109	√	–	–	–	√
JOG Negative	Jog negative	10	110	√	–	–	–	√
JOG Fast/Slow	JOG velocity switching:	11	111	√	–	–	–	√
Gear Ratio Switch	Electronic gear ratio switch	12	112	√	–	–	–	–
Start Single Data Set	Start single data set	13	113	–	–	–	–	√
Data Set Select	Select target data set	14	114	–	–	–	–	√
Data Set Bit 0	Select data set Bit 0	15	115	–	–	–	–	√
Data Set Bit 1	Select data set Bit 1	16	116	–	–	–	–	√
Data Set Bit 2	Select data set Bit 2	17	117	–	–	–	–	√
Data Set Bit 3	Select data set Bit 3	18	118	–	–	–	–	√
Gear Offset 1	First electronic gear offset	19	119	√	–	–	–	–
Gear Offset 2	Second electronic gear offset	20	120	√	–	–	–	–
Reference Switch (REF)	Reference switch	21	121	√	√	√	√	√
Positive Limit Switch (LIMP)	Positive limit switch	22	122	√	√	√	√	√
Negative Limit Switch (LIMN)	Negative limit switch	23	123	√	√	√	√	√
Switch Controller Parameter Set	Switch of controller parameter set	24	124	√	√	√	√	√
Operating Mode Switch	Operating mode switch	27	127	√	–	√	√	–
Velocity Controller Integral Off	Deactivate the velocity controller integral	28	128	√	√	√	√	√
Start Motion Sequence	Start motion sequence	29	129	–	–	–	–	√
Start Signal of RMAC	Start signal of RMAC	30[1]	130	√	–	√	√	–
Active RMAC	Enable RMAC	31	131	√	√	√	√	√
Active Operating Mode	Enable the operating mode	32	132	√	√	√	√	√

P3-00	Function of input point DI0	Minimum value	1	Unit	Related control mode		
		Factory setting	(Related to mode)	–	P	V / Vz	T / Tz
		Maximum value	150		MS	S	–

Parameter function: **MODBUS address: 1794**

Function name	Function description	Function value		Related control mode				
		Normally open	Normally closed	P	S	V / Vz	T / Tz	MS
Data Set Bit 4	Select data set Bit 4	35	135	–	–	–	–	√
Inversion AI1	Turn on Inversion AI1	25	125	–	√	√	√	–
Inversion AI2	Turn on Inversion AI2	26	126	–	√	√	√	–
Homing	Set Homing Point	42[2]	142	–	√	√	√	√
CCLR	Clear position deviation	43[1]	143	√	–	–	–	–
INTVCM0	Selection of velocity with internal command 0	44	144	–	–	√	√	–
INTVCM1	Selection of velocity with internal command 1	45	145	–	–	√	√	–
INTVCM2	Selection of velocity with internal command 2	46	146	–	–	√	√	–
INTTCM0	Selection of torque with internal command 0	47	147	–	–	√	√	–
INTTCM1	Selection of torque with internal command 1	48	148	–	–	√	√	–
INTTCM2	Selection of torque with internal command 2	49	149	–	–	√	√	–
INHP	Input pulse suppression	50	150	√	–	–	–	–

1 Only applicable for DI8 and DI9.

2 ORGP, Homing command

The default values are mode-dependent, and please see**Factory Settings for I/O Functions, page 164**.

Setting can only be modified if power stage is disabled.

Modified settings become active the next time the product is powered on.

P3-01	Function of input point DI1	Minimum value	1	Unit	Related control mode		
		Factory setting	(Related to mode)	–	P	V / Vz	T / Tz
		Maximum value	150		MS	S	–

Parameter function: **MODBUS address: 1796**

Function of input point DI1

The default values are mode-dependent, and please see**Factory Settings for I/O Functions, page 164**.

Setting can only be modified if power stage is disabled.

Modified settings become active the next time the product is powered on.

P3-02	Function of input point DI2	Minimum value	1	Unit	Related control mode		
		Factory setting	(Related to mode)	–	P	V / Vz	T / Tz
		Maximum value	150		MS	S	–

Parameter function: **MODBUS address: 1798**

Function of input point DI2

The default values are mode-dependent, and please seeFactory Settings for I/O Functions, page 164.

Setting can only be modified if power stage is disabled.

Modified settings become active the next time the product is powered on.

P3-03	Function of input point DI3	Minimum value	1	Unit	Related control mode		
		Factory setting	(Related to mode)	–	P	V / Vz	T / Tz
		Maximum value	150		MS	S	–

Parameter function: **MODBUS address: 1800**

Function of input point DI3

The default values are mode-dependent, and please seeFactory Settings for I/O Functions, page 164.

Setting can only be modified if power stage is disabled.

Modified settings become active the next time the product is powered on.

P3-04	Function of input point DI4	Minimum value	1	Unit	Related control mode		
		Factory setting	(Related to mode)	–	P	V / Vz	T / Tz
		Maximum value	150		MS	S	–

Parameter function: **MODBUS address: 1802**

Function of input point DI4

The default values are mode-dependent, and please seeFactory Settings for I/O Functions, page 164.

Setting can only be modified if power stage is disabled.

Modified settings become active the next time the product is powered on.

P3-05	Function of input point DI5	Minimum value	1	Unit	Related control mode		
		Factory setting	(Related to mode)	–	P	V / Vz	T / Tz
		Maximum value	150		MS	S	–

Parameter function: **MODBUS address: 1804**

Function of input point DI5

The default values are mode-dependent, and please seeFactory Settings for I/O Functions, page 164.

Setting can only be modified if power stage is disabled.

Modified settings become active the next time the product is powered on.

P3-06	Function of input point DI6	Minimum value	1	Unit	Related control mode		
		Factory setting	(Related to mode)	–	P	V / Vz	T / Tz
		Maximum value	150		MS	S	–

Parameter function: **MODBUS address: 1806**

Function of input point DI6

The default values are mode-dependent, and please seeFactory Settings for I/O Functions, page 164.

Setting can only be modified if power stage is disabled.

Modified settings become active the next time the product is powered on.

P3-07	Function of input point DI7	Minimum value	1	Unit	Related control mode		
		Factory setting	(Related to mode)	–	P	V / Vz	T / Tz
		Maximum value	150		MS	S	–

Parameter function: **MODBUS address: 1808**

Function of input point DI7

The default values are mode-dependent, and please see**Factory Settings for I/O Functions, page 164**.

Setting can only be modified if power stage is disabled.

Modified settings become active the next time the product is powered on.

P3-08	Function of input point DI8	Minimum value	1	Unit	Related control mode		
		Factory setting	(Related to mode)	–	P	V / Vz	T / Tz
		Maximum value	150		MS	S	–

Parameter function: **MODBUS address: 1824**

Function of input point DI8

The default values are mode-dependent, and please see**Factory Settings for I/O Functions, page 164**.

Setting can only be modified if power stage is disabled.

Modified settings become active the next time the product is powered on.

P3-09	Function of input point DI9	Minimum value	1	Unit	Related control mode		
		Factory setting	(Related to mode)	–	P	V / Vz	T / Tz
		Maximum value	150		MS	S	–

Parameter function: **MODBUS address: 1826**

Function of input point DI9

The default values are mode-dependent, and please see**Factory Settings for I/O Functions, page 164**.

Setting can only be modified if power stage is disabled.

Modified settings become active the next time the product is powered on.

P3-10	Function of input point DI10	Minimum value	1	Unit	Related control mode		
		Factory setting	(Related to mode)	–	P	V / Vz	T / Tz
		Maximum value	150		MS	S	–

Parameter function: **MODBUS address: 1828**

Function of input point DI10

The default values are mode-dependent, and please see**Factory Settings for I/O Functions, page 164**.

NOTE: Function of DI10 is not available in Gear mode.

Setting can only be modified if power stage is disabled.

Modified settings become active the next time the product is powered on.

P3-11	Function of input point DI11	Minimum value	1	Unit	Related control mode		
		Factory setting	(Related to mode)	–	P	V / Vz	T / Tz
		Maximum value	150		MS	S	–

Parameter function: **MODBUS address: 1830**

Function of input point DI11

The default values are mode-dependent, and please seeFactory Settings for I/O Functions, page 164.

NOTE: Function of DI11 is not available in Gear mode.

Setting can only be modified if power stage is disabled.

Modified settings become active the next time the product is powered on.

P3-12	Debounce time of DI0	Minimum value	0	Unit	Related control mode		
		Factory setting	6	–	P	V / Vz	T / Tz
		Maximum value	22		MS	S	–

Parameter function: **MODBUS address: 2112**

Debounce time of DI0

0 / No: No software Filtering

1 / 0.25 ms

2 / 0.50 ms

3 / 0.75 ms

4 / 1.00 ms

5 / 1.25 ms

6 / 1.50 ms

14 / 1.75 ms

15 / 2 ms

16 / 4 ms

17 / 6 ms

18 / 8 ms

19 / 10 ms

20 / 12 ms

21 / 14 ms

22 / 16 ms

Setting can only be modified if power stage is disabled.

Modified settings become active immediately.

P3-13	Debounce time of DI1	Minimum value	0	Unit	Related control mode		
		Factory setting	6	–	P	V / Vz	T / Tz
		Maximum value	22		MS	S	–

Parameter function: **MODBUS address: 2114**

Debounce time of DI1

See parameters P3-12.

Setting can only be modified if power stage is disabled.

Modified settings become active immediately.

P3-14	Debounce time of DI2	Minimum value	0	Unit	Related control mode		
		Factory setting	6	–	P	V / Vz	T / Tz
		Maximum value	22		MS	S	–

Parameter function: **MODBUS address: 2116**

Debounce time of DI2

See parameters P3-12.

Setting can only be modified if power stage is disabled.

Modified settings become active immediately.

P3-15	Debounce time of DI3	Minimum value	0	Unit	Related control mode		
		Factory setting	6	–	P	V / Vz	T / Tz
		Maximum value	22		MS	S	–

Parameter function: **MODBUS address: 2118**

Debounce time of DI3

See parameters P3-12.

Setting can only be modified if power stage is disabled.

Modified settings become active immediately.

P3-16	Debounce time of DI4	Minimum value	0	Unit	Related control mode		
		Factory setting	6	–	P	V / Vz	T / Tz
		Maximum value	22		MS	S	–

Parameter function: **MODBUS address: 2120**

Debounce time of DI4

See parameters P3-12.

Setting can only be modified if power stage is disabled.

Modified settings become active immediately.

P3-17	Debounce time of DI5	Minimum value	0	Unit	Related control mode		
		Factory setting	6	–	P	V / Vz	T / Tz
		Maximum value	22		MS	S	–

Parameter function: **MODBUS address: 2122**

Debounce time of DI5

See parameters P3-12.

Setting can only be modified if power stage is disabled.

Modified settings become active immediately.

P3-18	Debounce time of DI6	Minimum value	0	Unit	Related control mode		
		Factory setting	6	–	P	V / Vz	T / Tz
		Maximum value	22		MS	S	–

Parameter function: **MODBUS address: 2126**

Debounce time of DI6

See parameters P3-12.

Setting can only be modified if power stage is disabled.

Modified settings become active immediately.

P3-19	Debounce time of DI7	Minimum value	0	Unit	Related control mode		
		Factory setting	6	–	P	V / Vz	T / Tz
		Maximum value	22		MS	S	–

Parameter function: **MODBUS address: 2128**

Debounce time of DI7

See parameters P3-12.

Setting can only be modified if power stage is disabled.

Modified settings become active immediately.

P3-20	Debounce time of DI8	Minimum value	0	Unit	Related control mode		
		Factory setting	0	–	P	V / Vz	T / Tz
		Maximum value	6		MS	S	–

Parameter function: **MODBUS address: 2130**

Debounce time of DI8

0 / No: Debounce off

1 / 0.25 ms

2 / 0.50 ms

3 / 0.75 ms

4 / 1.00 ms

5 / 1.25 ms

6 / 1.50 ms

Hardware debounce level of DI8

7/ 0.5 µs

8 / 1 µs

9 / 2 µs

10 / 4 µs

11 / 8 µs

12 / 20 µs

13 / 40 µs

Limitation: If both DI8 and DI9 use hardware debounce, the debounce values must be the same, whichever is set later. However, you can choose to enable hardware debounce for one channel and disable it for the other. Setting 0 turns off the filtering for the other channel. 0 signifies debounce off.

Setting can only be modified if power stage is disabled. When using the CCLR and RMAC functions, software debounce cannot be set for Fast DI.

Modified settings become active immediately.

P3-21	Debounce time of DI9	Minimum value	0	Unit	Related control mode		
		Factory setting	6	–	P	V / Vz	T / Tz
		Maximum value	6		MS	S	–

Parameter function: **MODBUS address: 2132**

Debounce time of DI9

0 / No: Debounce off

1 / 0.25 ms

2 / 0.50 ms

3 / 0.75 ms

4 / 1.00 ms

5 / 1.25 ms

6 / 1.50 ms

Hardware debounce level of DI8

7/ 0.5 µs

8 / 1 µs

9 / 2 µs

10 / 4 µs

11 / 8 µs

12 / 20 µs

13 / 40 µs

Limitation: If both DI8 and DI9 use hardware debounce, the debounce values must be the same, whichever is set later. However, you can choose to enable hardware debounce for one channel and disable it for the other. Setting 0 turns off the filtering for the other channel. 0 signifies debounce off.

Setting can only be modified if power stage is disabled. When using the CCLR and RMAC functions, software debounce cannot be set for Fast DI.

Modified settings become active immediately.

P3-22	Debounce time of DI10	Minimum value	0	Unit	Related control mode		
		Factory setting	6	–	P	V / Vz	T / Tz
		Maximum value	6		MS	S	–

Parameter function: **MODBUS address: 2134**

Debounce time of DI10

See parameters P3-12.

Setting can only be modified if power stage is disabled.

Modified settings become active immediately.

P3-23	Debounce time of DI11	Minimum value	0	Unit	Related control mode		
		Factory setting	6	–	P	V / Vz	T / Tz
		Maximum value	6		MS	S	–

Parameter function: **MODBUS address: 2136**

Debounce time of DI11

See parameters P3-12.

Setting can only be modified if power stage is disabled.

Modified settings become active immediately.

P3-24	Function of DQ0	Minimum value	1	Unit	Related control mode		
		Factory setting	(Related to mode)	–	P	V / Vz	T / Tz
		Maximum value	131		MS	S	–

Parameter function: **MODBUS address: 1810**

Function of DQ0

Function name	Function description	Function value		Related control mode				
		Normally open	Normally closed	P	S	V / Vz	T / Tz	MS
Freely Available	Not assigned	1	–	√	√	√	√	√
No Error	Driver has no fault	2	102	√	√	√	√	√
Active	Driver is enabled	3	103	√	√	√	√	√
RMAC Active or Finished	RMAC mode is active or finished	4	104	√	√	√	√	√
In Position Deviation Window	In position deviation window	5	105	√	√	–	–	√
In Velocity Deviation Window	In velocity deviation window	6	106	√	√	√	√	√
Velocity Below Threshold	Velocity is below threshold	7	107	√	√	√	√	√
Torque Below Threshold	Torque is below threshold	8	108	√	√	√	√	√
Halt Acknowledge	Halt is acknowledged	9	109	√	√	√	√	√
Motion Sequence: Start Acknowledge	Motion Sequence: Start is acknowledged	11	111	–	–	–	–	√
Motor Standstill	Motor at a standstill state (actual velocity < 9 rpm)	13	113	√	√	√	√	√
Selected Error	There is one of the errors specified in Error Class 1...4	14	114	√	√	√	√	√
Valid Reference (ref_ ok)	Reference is set (ref_ok)	15	115	–	–	–	–	√
Selected Warning	There is one of the warnings specified in Error Class 0	16	116	√	√	√	√	√
Motion Sequence: Done	Motion Sequence is completed	17	117	–	–	–	–	√
Motor Moves Positive	Motor moves in a positive direction	22	122	√	√	√	√	√
Motor Moves Negative	Motor moves in a negative direction	23	123	√	√	√	√	√
Release Brake	Holding brake control	24	124	√	√	√	√	√
Torque Below Threshold	Motor torque is above threshold	25	125	√	√	√	√	√
Motor Index	Motor Z-phase pulse[1]	26	126	√	√	√	√	√
In Position Deviation Window2	Within position deviation range	27	127	√	√	–	–	√
Target Position Reached	Target position is reached	28	128	–	√	–	–	√
Target Velocity Reached	Target velocity is reached	29	129	√	√	√	–	√
Target Torque Reached	Target torque reached	30	130	–	√	–	√	√
Velocity Over Threshold	Motor velocity is above threshold	31	131	√	√	√	√	√

1 Only applicable for DQ6.

P3-24	Function of DQ0	Minimum value	1	Unit	Related control mode		
		Factory setting	(Related to mode)	–	P	V / Vz	T / Tz
		Maximum value	131		MS	S	–

Parameter function: **MODBUS address: 1810**

The default values are mode-dependent, and please seeFactory Settings for I/O Functions, page 164.

Setting can only be modified if power stage is disabled.

Modified settings become active the next time the product is powered on.

P3-25	Function of DQ1	Minimum value	1	Unit	Related control mode		
		Factory setting	(Related to mode)	–	P	V / Vz	T / Tz
		Maximum value	131		MS	S	–

Parameter function: **MODBUS address: 1812**

Function of DQ1

The default values are mode-dependent, and please seeFactory Settings for I/O Functions, page 164.

Setting can only be modified if power stage is disabled.

Modified settings become active the next time the product is powered on.

P3-26	Function of DQ2	Minimum value	1	Unit	Related control mode		
		Factory setting	(Related to mode)	–	P	V / Vz	T / Tz
		Maximum value	131		MS	S	–

Parameter function: **MODBUS address: 1814**

Function of DQ2

The default values are mode-dependent, and please seeFactory Settings for I/O Functions, page 164.

Setting can only be modified if power stage is disabled.

Modified settings become active the next time the product is powered on.

P3-27	Function of DQ3	Minimum value	1	Unit	Related control mode		
		Factory setting	(Related to mode)	–	P	V / Vz	T / Tz
		Maximum value	131		MS	S	–

Parameter function: **MODBUS address: 1816**

Function of DQ3

The default values are mode-dependent, and please seeFactory Settings for I/O Functions, page 164.

Setting can only be modified if power stage is disabled.

Modified settings become active the next time the product is powered on.

P3-28	Function of DQ4	Minimum value	1	Unit	Related control mode		
		Factory setting	(Related to mode)	–	P	V / Vz	T / Tz
		Maximum value	131		MS	S	–

Parameter function: **MODBUS address: 1818**

Function of DQ4

The default values are mode-dependent, and please see**Factory Settings for I/O Functions, page 164**.

Setting can only be modified if power stage is disabled.

Modified settings become active the next time the product is powered on.

P3-29	Function of DQ5	Minimum value	1	Unit	Related control mode		
		Factory setting	(Related to mode)	–	P	V / Vz	T / Tz
		Maximum value	131		MS	S	–

Parameter function: **MODBUS address: 1820**

Function of DQ5

The default values are mode-dependent, and please see**Factory Settings for I/O Functions, page 164**.

Setting can only be modified if power stage is disabled.

Modified settings become active the next time the product is powered on.

P3-30	Function of DQ6	Minimum value	1	Unit	Related control mode		
		Factory setting	(Related to mode)	–	P	V / Vz	T / Tz
		Maximum value	131		MS	S	–

Parameter function: **MODBUS address: 1822**

Function of DQ6

The default values are mode-dependent, and please see**Factory Settings for I/O Functions, page 164**.

Setting can only be modified if power stage is disabled.

Modified settings become active the next time the product is powered on.

P3-31	Analog input 1: Input function	Minimum value	0	Unit	Related control mode		
		Factory setting	(Related to mode)	–	–	V / Vz	T / Tz
		Maximum value	4		–	–	–

Parameter function: **MODBUS address: 2332**

0 / No function: No function.

1 / Target Velocity: Target velocity in profile velocity.

2 / Target Torque: Target torque in profile torque.

3 / Velocity Limitation: Velocity limitation in profile velocity or profile torque.

4 / Torque Limitation: Torque limitation in profile velocity or profile torque.

Setting can only be modified if power stage is disabled.

Modified settings become active immediately.

P3-32	Analog input 1: Time constant of input smoothing filter	Minimum value	0	Unit	Related control mode		
		Factory setting	0	0.01 ms	–	V / Vz	T / Tz
		Maximum value	32767		–	–	–

Parameter function: **MODBUS address: 2308**

Time constant of input smoothing filter 1

0: Disable the function.

Other values: Smoothing filter time constant.

In increments of 0.01 ms.

Modified settings become active immediately.

P3-33	Analog input 1: Voltage value is inversed	Minimum value	0	Unit	Related control mode		
		Factory setting	0	–	–	V / Vz	T / Tz
		Maximum value	1		–	–	–

Parameter function: **MODBUS address: 2362**

0 / Inversion Off: Voltage value is not inversed.

1 / Inversion On: Voltage value is inversed.

Modified settings become active immediately.

P3-34	Analog input 1: Input offset value	Minimum value	-5000	Unit	Related control mode		
		Factory setting	0	1 mV	–	V / Vz	T / Tz
		Maximum value	5000		–	–	–

Parameter function: **MODBUS address: 2326**

Input offset value of analog input 1

Actual value of analog input 1 = Input voltage of analog input 1 - input offset value of analog input 1.

Modified settings become active immediately.

P3-35	Analog input 1: Use forced analog voltage input value	Minimum value	0	Unit	Related control mode		
		Factory setting	0	–	–	V / Vz	T / Tz
		Maximum value	1		–	–	–

Parameter function: **MODBUS address: 2310**

0: No forced value used.

1: Forced value used;

Modified settings become active immediately.

P3-36	Analog input 1: Forced analog voltage input value	Minimum value	-10000	Unit	Related control mode		
		Factory setting	0	1 mV	–	V / Vz	T / Tz
		Maximum value	10000		–	–	–

Parameter function: **MODBUS address: 2312**

Forced analog voltage values are active when P3-35 is 1.

Modified settings become active immediately.

P3-37	Analog input 1: Zero voltage deadband window	Minimum value	0	Unit	Related control mode		
		Factory setting	0	1 mV	–	V / Vz	T / Tz
		Maximum value	1000		–	–	–

Parameter function: **MODBUS address: 2322**

Zero voltage dead zone window of analog input 1

The servo drive will treat the analog input voltage within the threshold of this window as 0V.

Modified settings become active immediately.

P3-38	Analog input 2: Input function	Minimum value	0	Unit	Related control mode		
		Factory setting	(Mode dependent)	–	–	V / Vz	T / Tz
		Maximum value	4		–	–	–

Parameter function: **MODBUS address: 2342**

0 / No function: No function.

1 / Target Velocity: Target velocity in profile velocity.

2 / Target Torque: Target torque in profile torque.

3 / Velocity Limitation: Velocity limitation in profile velocity or profile torque.

4 / Torque Limitation: Torque limitation in profile velocity or profile torque.

Setting can only be modified if power stage is disabled.

Modified settings become active immediately.

P3-39	Analog input 2: Time constant of input smoothing filter	Minimum value	0	Unit	Related control mode		
		Factory setting	0	0.01 ms	–	V / Vz	T / Tz
		Maximum value	32767		–	–	–

Parameter function: **MODBUS address: 2352**

Time constant of input smoothing filter 2

0: Disable the function.

Other values: Smoothing filter time constant.

In increments of 0.01 ms.

Modified settings become active immediately.

P3-40	Analog input 2: Voltage value is inversed	Minimum value	0	Unit	Related control mode		
		Factory setting	0	–	–	V / Vz	T / Tz
		Maximum value	1		–	–	–

Parameter function: **MODBUS address: 2364**

0 / Inversion Off: Voltage value is not inversed.

1 / Inversion On: Voltage value is inversed.

Modified settings become active immediately.

P3-41	Analog input 2: Input offset value	Minimum value	-5000	Unit	Related control mode		
		Factory setting	0	1 mV	–	V / Vz	T / Tz
		Maximum value	5000		–	–	–

Parameter function: **MODBUS address: 2328**

Input offset value of analog input 2

Actual value of analog input 2 = Input voltage of analog input 2 - input offset value of analog input 2.

Modified settings become active immediately.

P3-42	Analog input 2: Use forced analog voltage input value	Minimum value	0	Unit	Related control mode		
		Factory setting	0	–	–	V / Vz	T / Tz
		Maximum value	1		–	–	–

Parameter function: **MODBUS address: 2318**

0: No forced value used.

1: Forced value used;

Modified settings become active immediately.

P3-43	Analog input 2: Forced analog voltage input value	Minimum value	-10000	Unit	Related control mode		
		Factory setting	0	1 mV	–	V / Vz	T / Tz
		Maximum value	10000		–	–	–

Parameter function: **MODBUS address: 2320**

Forced analog voltage values are active when P3-42 is 1.

Modified settings become active immediately.

P3-44	Analog input 2: Zero voltage deadband window	Minimum value	0	Unit	Related control mode		
		Factory setting	0	1 mV	–	V / Vz	T / Tz
		Maximum value	1000		–	–	–

Parameter function: **MODBUS address: 2324**

Zero voltage dead zone window of analog input 2

The servo drive will treat the analog input voltage within the threshold of this window as 0V.

Modified settings become active immediately.

P3-45	Analog output 1: Output function	Minimum value	0	Unit	Related control mode		
		Factory setting	1	–	–	V / Vz	T / Tz
		Maximum value	14		–	–	–

Parameter function: **MODBUS address: 2366**

Analog output function

0 / No function: No function.

1 / Actual velocity.

2 / Actual torque.

3 / Velocity command.

4 / Torque command.

5 / Following Position Deviation: Current following position deviation.

6 / Forced value: Output fixed analog voltage.

7 / Pulse input target velocity: Target velocity (pulse frequency) represented by the current pulse input.

8 / Bus voltage: Drive bus voltage.

9 / Drive load factor: Average load factor of the current drive output stage.

10 / Motor load factor: Average load factor of current motor.

11 / Braking resistor load factor: average load factor of current braking resistor.

12 / Drive load factor: Load factor of the current drive output stage.

13 / Motor overload factor: Current motor overload factor.

14 / Braking resistor overload factor: Overload factor of current braking resistor.

Modified settings become active immediately.

P3-46	Analog output 1: Output gain	Minimum value	0	Unit	Related control mode		
		Factory setting	0	–	–	V / Vz	T / Tz
		Maximum value	2147483647		–	–	–

Parameter function: **MODBUS address: 2370**

Analog output gain

Set the value of the parameter monitored by the analog output 1 corresponding to the 1 V analog output.

Modified settings become active immediately.

P3-47	Analog output 1: Output format	Minimum value	0	Unit	Related control mode		
		Factory setting	0	–	–	V / Vz	T / Tz
		Maximum value	1		–	–	–

Parameter function: **MODBUS address: 2368**

Analog output format

0 / Symbolized Output: -10 V to +10 V.

1 / Absolute Value Output: 0V to +10V.

Modified settings become active immediately.

P3-48	Analog input 1: Voltage value is inversed	Minimum value	0	Unit	Related control mode		
		Factory setting	0	–	–	V / Vz	T / Tz
		Maximum value	1		–	–	–

Parameter function: **MODBUS address: 2386**

Voltage value of analog output is inversed

0 / Inversion Off: Voltage value is not inversed.

1 / Inversion On: Voltage value is inversed.

Modified settings become active immediately.

P3-49	Analog output 1: Input offset value	Minimum value	-5000	Unit	Related control mode		
		Factory setting	0	1 mV	–	V / Vz	T / Tz
		Maximum value	5000		–	–	–

Parameter function: **MODBUS address: 2374**

Output offset value

Modified settings become active immediately.

P3-50	Analog output 1: Forced output value	Minimum value	-10000	Unit	Related control mode		
		Factory setting	0	1 mV	–	V / Vz	T / Tz
		Maximum value	10000		–	–	–

Parameter function: **MODBUS address: 2372**

Forced output value

Modified settings become active immediately.

P3-51	Analog output 2: Output function	Minimum value	0	Unit	Related control mode		
		Factory setting	2	–	–	V / Vz	T / Tz
		Maximum value	14		–	–	–

Parameter function: **MODBUS address: 2376**

Analog output function

0 / No function: No function.

1 / Actual velocity.

2 / Actual torque.

3 / Velocity command.

4 / Torque command.

5 / Following Position Deviation: Current following position deviation.

6 / Forced value: Output fixed analog voltage.

7 / Pulse input target velocity: Target velocity (pulse frequency) represented by the current pulse input.

8 / Bus voltage: Drive bus voltage.

9 / Drive load factor: Average load factor of the current drive output stage.

10 / Motor load factor: Average load factor of current motor.

11 / Braking resistor load factor: average load factor of current braking resistor.

12 / Drive load factor: Load factor of the current drive output stage.

13 / Motor overload factor: Current motor overload factor.

14 / Braking resistor overload factor: Overload factor of current braking resistor.

Modified settings become active immediately.

P3-52	Analog output 2: Output gain	Minimum value	0	Unit	Related control mode		
		Factory setting	0	–	–	V / Vz	T / Tz
		Maximum value	2147483647		–	–	–

Parameter function: **MODBUS address: 2380**

Analog output gain

Set the value of the parameter monitored by the analog output 2 corresponding to the 1 V analog output.

Modified settings become active immediately.

P3-53	Analog output 2: Output format	Minimum value	0	Unit	Related control mode		
		Factory setting	0	–	–	V / Vz	T / Tz
		Maximum value	1		–	–	–

Parameter function: **MODBUS address: 2378**

Analog output format

0 / Symbolized Output: -10 V to +10 V.

1 / Absolute Value Output: 0V to +10V.

Modified settings become active immediately.

P3-54	Analog input 2: Voltage value is inversed	Minimum value	0	Unit	Related control mode		
		Factory setting	0	–	–	V / Vz	T / Tz
		Maximum value	1		–	–	–

Parameter function: **MODBUS address: 2388**

Voltage value of analog output is inversed

0 / Inversion Off: Voltage value is not inversed.

1 / Inversion On: Voltage value is inversed.

Modified settings become active immediately.

P3-55	Analog output 2: Input offset value	Minimum value	-5000	Unit	Related control mode		
		Factory setting	0	1 mV	–	V / Vz	T / Tz
		Maximum value	5000		–	–	–

Parameter function: **MODBUS address: 2384**

Output offset value

Modified settings become active immediately.

P3-56	Analog output 2: Forced output value	Minimum value	-10000	Unit	Related control mode		
		Factory setting	0	1 mV	–	V / Vz	T / Tz
		Maximum value	10000		–	–	–

Parameter function: **MODBUS address: 2382**

Forced output value

Modified settings become active immediately.

P3-57	Enabling the power stage at PowerOn.	Minimum value	0	Unit	Related control mode		
		Factory setting	0	–	P	V / Vz	T / Tz
		Maximum value	2		MS	S	–

Parameter function: **MODBUS address: 1292**

Enabling the power stage at PowerOn.

0 / RisingEdge /: A rising edge with the signal input function "Enable" enables the power stage.

1 / HighLevel /: An active signal input with signal input function "Enable" enables the power stage.

2 / AutoOn /: The power stage is automatically enabled.

Modified settings become active the next time the motor moves.

P3-58	Enabling the power stage as set via IO_ AutoEnable even after error.	Minimum value	0	Unit	Related control mode		
		Factory setting	0	–	P	V / Vz	T / Tz
		Maximum value	1		MS	S	–

Parameter function: **MODBUS address: 1288**

Enabling the power stage as set via IO_ AutoEnable even after error.

0 / Off /: Setting in parameter IO_ AutoEnable is only used after start-up.

1 / On /: Setting in parameter IO_AutoEnable is used after start-up and after detected error.

Modified settings become active the next time the motor moves.

P3-59	Additional 'Fault Reset' for the signal input function 'Enable'.	Minimum value	0	Unit	Related control mode		
		Factory setting	0	–	P	V / Vz	T / Tz
		Maximum value	2		MS	S	–

Parameter function: **MODBUS address: 1384**

Additional 'Fault Reset' for the signal input function 'Enable'.

0 / Off /: No additional 'Fault Reset'.

1 / OnFallingEdge: Additional 'Fault Reset' with falling edge.

2 / OnRisingEdge: Additional 'Fault Reset' with rising edge.

Modified settings become active the next time the motor moves.

P3-60	Velocity limitation via input	Minimum value	0	Unit	Related control mode		
		Factory setting	10	usr_v	P	V / Vz	T / Tz
		Maximum value	2147483647		MS	S	–

Parameter function: **MODBUS address: 1596**

Velocity limitation via input

The input point function limits the velocity below the value set via this parameter.

Modified settings become active immediately.

P3-61	Torque limitation via input	Minimum value	0	Unit	Related control mode		
		Factory setting	1000	0.1 %	P	V / Vz	T / Tz
		Maximum value	30000		MS	S	–

Parameter function: **MODBUS address: 1614**

Torque limitation via input

The torque limitation value via input is lower than the value set via this parameter.

In increments of 0.1 %.

Modified settings become active immediately.

P3-62	Pulse Clear (CCLR) mode	Minimum value	0	Unit	Related control mode		
		Factory setting	0	–	P	–	–
		Maximum value	1		–	–	–

Parameter function: **MODBUS address: 1688**

Pulse Clear (CCLR) mode

0 / Rising Edge: A rising edge with the signal input function [Clear Position Deviation] enables the power stage.

1 / HighLevel: An active signal input with signal input function [Clear Position Deviation] enables the power stage.

Setting can only be modified if power stage is disabled.

Modified settings become active immediately.

P3-63	Target of operating mode switching	Minimum value	0	Unit	Related control mode		
		Factory setting	0	–	P	V / Vz	T / Tz
		Maximum value	9		MS	–	–

Parameter function: **MODBUS address: 1630**

Switch operating mode via I / O

0 / None

1 / Profile Torque T

2 / Profile Velocity V

3 / Electric Gear

8 / Profile Torque with Internal Command Tz

9 / Profile Velocity with Internal Command Vz

Modified settings become active immediately.

P4 - Velocity and Torque Settings

P4-00	Activation of the motion profile for velocity.	Minimum value	0	Unit	Related control mode		
		Factory setting	1	–	P	V / Vz	–
		Maximum value	1		–	S	–

Parameter function: **MODBUS address: 1622**

Activation of the motion profile for velocity.

0 / Profile Off: Profile off

1 / Profile On: Profile on

Setting can only be modified if power stage is disabled.

Modified settings become active immediately.

P4-01	Maximum velocity of the motion profile for velocity.	Minimum value	1	Unit	Related control mode		
		Factory setting	13200	usr_v	P	V / Vz	–
		Maximum value	2147483647		–	S	–

Parameter function: **MODBUS address: 1554**

Maximum velocity of internal motion of the drive

If a greater reference velocity is set in one of these operating modes, it is automatically limited to this parameter.

Setting can only be modified if power stage is disabled.

Modified settings become active immediately.

P4-02	Acceleration of the motion profile for velocity.	Minimum value	1	Unit	Related control mode		
		Factory setting	6000	usr_a	–	V / Vz	–
		Maximum value	2147483647		MS	S	–

Parameter function: **MODBUS address: 1556**

Acceleration of the motion profile for velocity.

In any motion profile for velocity, the acceleration set via this parameter will be used.

If the acceleration of the velocity command is greater than the value set via this parameter when the analog input voltage is used as the velocity command, the acceleration of the actual motion will be automatically limited to the acceleration set via this parameter

Modified settings become active the next time the motor moves.

P4-03	Deceleration of motion profile of the drive	Minimum value	1 or 120	Unit	Related control mode		
		Factory setting	6000	usr_a	–	V / Vz	–
		Maximum value	2147483647		MS	S	–

Parameter function: **MODBUS address: 1558**

Deceleration of motion profile of the drive

In any mode motion profile for velocity, the deceleration set in this parameter is used.

If the deceleration of the velocity command is greater than the value set in this parameter when the analog input voltage is used as a velocity command, the deceleration of the actual movements is automatically limited to the deceleration set in this parameter.

Operating mode with a minimum value of 1:

- Gear
- Profile Velocity
- MS (Move Velocity)

Operating mode with a minimum value of 120:

- Jog
- Profile Position
- Homing
- MS (Move absolute / Move additive / Move relative / Reference movement)

Modified settings become active the next time the motor moves.

P4-04	S-curve setting of motion profile command for velocity	Minimum value	0	Unit	Related control mode		
		Factory setting	0	1%	P	V / Vz	–
		Maximum value	100		–	S	–

Parameter function: **MODBUS address: 1692**

S-curve setting of motion profile command for velocity

When using an internal curve as the velocity command, the smoothing performance of acceleration and deceleration process is improved by setting the proportion of the S-shaped smooth curve during the acceleration and deceleration of motion profile for velocity.

This function will re-plan the ramp of the acceleration and deceleration ramps to ensure that the total time of the acceleration and deceleration motion profile remain unchanged.

Modified settings become active the next time the motor moves.

P4-05	JOG velocity for slow movement.	Minimum value	1	Unit	Related control mode		
		Factory setting	100	usr_v	P	V / Vz	T / Tz
		Maximum value	2147483647		–	S	–

Parameter function: **MODBUS address: 10504**

JOG velocity for slow movement.

The adjustable value is internally limited to the parameter setting in P4-01.

Modified settings become active immediately.

P4-06	JOG velocity for fast movement.	Minimum value	1	Unit	Related control mode		
		Factory setting	200	usr_v	P	V / Vz	T / Tz
		Maximum value	2147483647		–	S	–

Parameter function: **MODBUS address: 10506**

JOG velocity for fast movement.

The adjustable value is internally limited to the parameter setting in P4-01.

Modified settings become active immediately.

P4-07	Analog input 1: Velocity command represented by the 10V analog input in Profile Velocity	Minimum value	-2147483648	Unit	Related control mode		
		Factory setting	6000	usr_v	–	V / Vz	–
		Maximum value	2147483647		–	–	–

Parameter function: **MODBUS address: 2338**

Velocity command represented by 10 V analog input in Profile Velocity and velocity command represented by other analog input voltages can be obtained through the linear calculation.

Modified settings become active immediately.

P4-08	Analog input 2: Velocity command represented by the 10V analog input in Profile Velocity	Minimum value	-2147483648	Unit	Related control mode		
		Factory setting	6000	usr_v	–	V / Vz	–
		Maximum value	2147483647		–	–	–

Parameter function: **MODBUS address: 2348**

Velocity command represented by 10 V analog input in Profile Velocity and velocity command represented by other analog input voltages can be obtained through the linear calculation.

Modified settings become active immediately.

P4-09	Internal velocity command 1 / Internal velocity limitation 1	Minimum value	-2147483648	Unit	Related control mode		
		Factory setting	6000	usr_v	–	V / Vz	T / Tz
		Maximum value	2147483647		–	–	–

Parameter function: **MODBUS address: 8456**

Internal velocity command 1 / Internal velocity limitation 1

Modified settings become active immediately.

P4-10	Internal velocity command 2 / Internal velocity limitation 2	Minimum value	-2147483648	Unit	Related control mode		
		Factory setting	0	usr_v	–	V / Vz	T / Tz
		Maximum value	2147483647		–	–	–

Parameter function: MODBUS address: 8458

Internal velocity command 2 / Internal velocity limitation 2

Modified settings become active immediately.

P4-11	Internal velocity command 3 / Internal velocity limitation 3	Minimum value	-2147483648	Unit	Related control mode		
		Factory setting	0	usr_v	–	V / Vz	T / Tz
		Maximum value	2147483647		–	–	–

Parameter function: MODBUS address: 8460

Internal velocity command 3 / Internal velocity limitation 3

Modified settings become active immediately.

P4-12	Internal velocity command 4 / Internal velocity limitation 4	Minimum value	-2147483648	Unit	Related control mode		
		Factory setting	0	usr_v	–	V / Vz	T / Tz
		Maximum value	2147483647		–	–	–

Parameter function: MODBUS address: 8462

Internal velocity command 4 / Internal velocity limitation 4

Modified settings become active immediately.

P4-13	Internal velocity command 5 / Internal velocity limitation 5	Minimum value	-2147483648	Unit	Related control mode		
		Factory setting	0	usr_v	–	V / Vz	T / Tz
		Maximum value	2147483647		–	–	–

Parameter function: MODBUS address: 8464

Internal velocity command 5 / Internal velocity limitation 5

Modified settings become active immediately.

P4-14	Internal velocity command 6 / Internal velocity limitation 6	Minimum value	-2147483648	Unit	Related control mode		
		Factory setting	0	usr_v	–	V / Vz	T / Tz
		Maximum value	2147483647		–	–	–

Parameter function: MODBUS address: 8466

Internal velocity command 6 / Internal velocity limitation 6

Modified settings become active immediately.

P4-15	Internal velocity command 7 / Internal velocity limitation 7	Minimum value	-2147483648	Unit	Related control mode		
		Factory setting	0	usr_v	–	V / Vz	T / Tz
		Maximum value	2147483647		–	–	–

Parameter function: MODBUS address: 8468

Internal velocity command 7 / Internal velocity limitation 7

Modified settings become active immediately.

P4-16	Analog input 1: Velocity limitation represented by the 10V analog input	Minimum value	1	Unit	Related control mode		
		Factory setting	3000	usr_v	–	V / Vz	T / Tz
		Maximum value	2147483647		–	–	–

Parameter function: **MODBUS address: 2336**

Velocity limitation represented by 10 V analog input

Please refer to Setting Analog Input Gains, page 216for detailed parameter description.

Setting can only be modified if power stage is disabled.

Modified settings become active immediately.

P4-17	Analog input 2: Velocity limitation represented by the 10V analog input	Minimum value	1	Unit	Related control mode		
		Factory setting	3000	usr_v	–	V / Vz	T / Tz
		Maximum value	2147483647		–	–	–

Parameter function: **MODBUS address: 2346**

Velocity limitation represented by 10 V analog input

Please refer to Setting Analog Input Gains, page 216for detailed parameter description.

Setting can only be modified if power stage is disabled.

Modified settings become active immediately.

P4-18	Velocity limitation	Minimum value	1	Unit	Related control mode		
		Factory setting	13200	usr_v	P	V / Vz	T / Tz
		Maximum value	2147483647		MS	S	–

Parameter function: **MODBUS address: 4384**

Velocity limitation

During operation, the velocity limit is one of the following values (whichever is lowest):

- Value set via this parameter

- Maximum velocity of motor

– The velocity threshold defined in parameter P3-60 when the velocity limitation is activated via input

Modified settings become active immediately.

P4-19	Zero clamp mode	Minimum value	0	Unit	Related control mode		
		Factory setting	0	–	–	V / Vz	T / Tz
		Maximum value	4		MS	S	–

Parameter function: **MODBUS address: 1690**

Zero clamp mode

0 / Clamp invalid

1 / Motor locked when limitation reached in Profile Velocity: After DI is triggered, the motor continues to follow the instructions until the motor velocity is lower than the velocity threshold and the clamp velocity reaches 0 and is locked in the Profile Velocity.

2 / Motor locked when limitation reached in Position Mode: After DI is triggered, the motor continues to follow the instructions until the motor velocity is lower than the velocity threshold and the clamp velocity reaches 0 and is locked in the Position Mode.

3 / Motor locked immediately in Profile Velocity: After DI is triggered, the velocity command is immediately clamped to 0, the velocity command is sent to the velocity loop as a velocity command after being filtered via the parameter P4-21, and the motor is switched to the Profile Velocity when the actual motor velocity is lower than the velocity threshold.

4 / After DI is triggered, the velocity command is immediately clamped to 0, the velocity command is sent to the velocity loop as a velocity command after being filtered via the parameter P4-21, and the motor is switched to the position mode when the actual motor velocity is lower than the velocity threshold.

Setting can only be modified if power stage is disabled.

Modified settings become active immediately.

P4-20	Velocity limit for Zero Clamp.	Minimum value	0	Unit	Related control mode		
		Factory setting	10	usr_v	–	V / Vz	T / Tz
		Maximum value	2147483647		MS	S	–

Parameter function: **MODBUS address: 1616**

Velocity limit for Zero Clamp.

A Zero Clamp operation is only possible if the reference velocity is below the Zero Clamp velocity limit.

Modified settings become active immediately.

P4-21	Time constant of smoothing filter in zero clamp mode	Minimum value	0	Unit	Related control mode		
		Factory setting	0	0.01 ms	–	V / Vz	–
		Maximum value	32767		MS	S	–

Parameter function: **MODBUS address: 4478**

Time constant of smoothing filter in zero clamp mode

Modified settings become active immediately.

P4-22	Slope setting of the motion profile for torque.	Minimum value	0	Unit	Related control mode		
		Factory setting	100000	0.1% / s	–	–	T / Tz
		Maximum value	30000000		–	–	–

Parameter function: **MODBUS address: 1620**

In any internal profile torque of the drive, the slope set via this parameter will be used.

If the acceleration and deceleration slope of the torque command is greater than the value set via this parameter when the analog input voltage is used as the torque command, the acceleration and deceleration slope of the actual motion will be automatically limited to the slope set via this parameter.

Modified settings become active immediately.

P4-23	Activation of the motion profile for torque.	Minimum value	0	Unit	Related control mode		
		Factory setting	1	–	–	–	T / Tz
		Maximum value	1		–	–	–

Parameter function: **MODBUS address: 1624**

Activation of the motion profile for torque.

0 / Profile Off: Profile Off

1 / Profile On: Profile On

Setting can only be modified if power stage is disabled.

Modified settings become active immediately.

P4-24	Analog input 1: Torque command represented by the 10V analog input in Profile Torque	Minimum value	-30000	Unit	Related control mode		
		Factory setting	1000	0.1%	–	–	T / Tz
		Maximum value	30000		–	–	–

Parameter function: **MODBUS address: 2340**

Torque command represented by the 10 V analog input in Profile Torque, which is linearly distributed.

In increments of 0.1%.

Modified settings become active the next time the motor moves.

P4-25	Analog input 2: Torque command represented by the 10V analog input in Profile Torque	Minimum value	-30000	Unit	Related control mode		
		Factory setting	1000	0.1%	–	–	T / Tz
		Maximum value	30000		–	–	–

Parameter function: **MODBUS address: 2350**

Torque command represented by the 10 V analog input in Profile Torque, which is linearly distributed.

In increments of 0.1%.

Modified settings become active the next time the motor moves.

P4-26	Internal torque command 1 / Internal torque limitation 1	Minimum value	-30000	Unit	Related control mode		
		Factory setting	0	0.1%	–	V / Vz	T / Tz
		Maximum value	30000		–	–	–

Parameter function: **MODBUS address: 8200**

Internal torque command 1 / Internal torque limitation 1

Modified settings become active immediately.

P4-27	Internal torque command 2 / Internal torque limitation 2	Minimum value	-30000	Unit	Related control mode		
		Factory setting	0	0.1%	–	V / Vz	T / Tz
		Maximum value	30000		–	–	–

Parameter function: **MODBUS address: 8202**

Internal torque command 2 / Internal torque limitation 2

Modified settings become active immediately.

P4-28	Internal torque command 3 / Internal torque limitation 3	Minimum value	-30000	Unit	Related control mode		
		Factory setting	0	0.1%	–	V / Vz	T / Tz
		Maximum value	30000		–	–	–

Parameter function: **MODBUS address: 8204**

Internal torque command 3 / Internal torque limitation 3

Modified settings become active immediately.

P4-29	Internal torque command 4 / Internal torque limitation 4	Minimum value	-30000	Unit	Related control mode		
		Factory setting	0	0.1%	–	V / Vz	T / Tz
		Maximum value	30000		–	–	–

Parameter function: **MODBUS address: 8206**

Internal torque command 4 / Internal torque limitation 4

Modified settings become active immediately.

P4-30	Internal torque command 5 / Internal torque limitation 5	Minimum value	-30000	Unit	Related control mode		
		Factory setting	0	0.1%	–	V / Vz	T / Tz
		Maximum value	30000		–	–	–

Parameter function: **MODBUS address: 8208**

Internal torque command 5 / Internal torque limitation 5

Modified settings become active immediately.

P4-31	Internal torque command 6 / Internal torque limitation 6	Minimum value	-30000	Unit	Related control mode		
		Factory setting	0	0.1%	–	V / Vz	T / Tz
		Maximum value	30000		–	–	–

Parameter function: **MODBUS address: 8210**

Internal torque command 6 / Internal torque limitation 6

Modified settings become active immediately.

P4-32	Internal torque command 7 / Internal torque limitation 7	Minimum value	-30000	Unit	Related control mode		
		Factory setting	0	0.1%	–	V / Vz	T / Tz
		Maximum value	30000		–	–	–

Parameter function: **MODBUS address: 8212**

Internal torque command 7 / Internal torque limitation 7

Modified settings become active immediately.

P4-33	Analog input 1: Torque limitation represented by the 10V analog input	Minimum value	0	Unit	Related control mode		
		Factory setting	1000	0.1%	–	V / Vz	T / Tz
		Maximum value	30000		–	–	–

Parameter function: **MODBUS address: 2334**

Torque limitation represented by 10 V analog input

If set to the maximum value, the actual value is limited by the torque output capacity of the motor and the drive.

Please refer to Setting Analog Input Gains, page 235for detailed parameter description.

Setting can only be modified if power stage is disabled.

Modified settings become active immediately.

P4-34	Analog input 2: Torque limitation represented by the 10V analog input	Minimum value	0	Unit	Related control mode		
		Factory setting	1000	0.1%	–	V / Vz	T / Tz
		Maximum value	30000		–	–	–

Parameter function: **MODBUS address: 2344**

Torque limitation represented by 10 V analog input

If set to the maximum value, the actual value is limited by the torque output capacity of the motor and the drive.

Please refer to Setting Analog Input Gains, page 235for detailed parameter description.

Setting can only be modified if power stage is disabled.

Modified settings become active immediately.

P4-35	Current limitation	Minimum value	0	Unit	Related control mode		
		Factory setting	0	0.01 Arms	P	V / Vz	T / Tz
		Maximum value	46300		MS	S	–

Parameter function: **MODBUS address: 4376**

Current limitation

During operation, the actual current limit is one of the following values (whichever is lowest):

- Value set via this parameter

- Maximum current of motor

- Maximum current of drive

– The torque threshold defined in parameter P3-61 when the torque limitation is activated via input.

In increments of 0.01 Arms

Modified settings become active immediately.

P4-36	Adaptive carrier switching enable	Minimum value	0	Unit	Related control mode		
		Factory setting	0	–	P	V / Vz	T / Tz
		Maximum value	1		MS	S	–

Parameter function: **MODBUS address: 4484**

Adaptive carrier switching enable

0: Turn off the adaptive carrier switching function and the servo runs at 8 kHz all the time.

1: Turn on the adaptive carrier switching function. When the motor current is less than the switching threshold, the servo will automatically switch the running carrier to 16 kHz; when it is greater than the switching threshold, the servo will automatically switch the running carrier to 8 kHz. The switching threshold is set by P4-39.

Setting can only be modified if power stage is disabled.

Modified settings become active the next time the motor moves.

P4-37	Threshold for the number of consecutive current detections required for carrier switching	Minimum value	3	Unit	Related control mode		
		Factory setting	50	–	P	V / Vz	T / Tz
		Maximum value	1024		MS	S	–

Parameter function: **MODBUS address: 4486**

Threshold for the number of consecutive current detections required for carrier switching

The parameter takes effect only when P4-36 is set to 1.

The parameter determines the sensitivity of adaptive carrier switching. The current needs to be detected as greater or less than the switching threshold carrier a number of times consecutively at P4-37 before switching takes place.

Setting can only be modified if power stage is disabled.

Modified settings become active the next time the motor moves.

P4-38	Inertia Filter Time Constant	Minimum value	0	Unit	Related control mode		
		Factory setting	0	ms	P	V/Vz	T/Tz
		Maximum value	10000		MS	S	–

Parameter function: **MODBUS address: 4488**

Set inertia filter time constant.

Modified setting become active immediately.

P4-39	Adaptive carrier switching current threshold	Minimum value	30	Unit	Related control mode		
		Factory setting	40	%	P	V/Vz	T/Tz
		Maximum value	60		MS	S	–

Parameter function: **MODBUS address: 4698**

Adaptive carrier switching current threshold

The parameter takes effect only when P4-36 is set to 1.

The parameter determines the amount of current for adaptive carrier switching: a percentage of the current motor rated current.

Setting can only be modified if power stage is disabled.

Modified settings become active the next time the motor is energized.

P5 - Extended settings

P5-00	Lock HMI	Minimum value	0	Unit	Related control mode		
		Factory setting	0	–	P	V / Vz	T / Tz
		Maximum value	1		MS	S	–

Parameter function: **MODBUS address: 14850**

Lock HMI

0 / Not Locked / nLoc: HMI not locked

1 / Locked / Loc: HMI locked

The following functions can no longer be started when the HMI is locked:

- Parameter change
- JOG
- Easy Tuning
- Fault Reset

Modified settings become active immediately.

P5-01	Denominator of internal position count unit (usr_p) conversion	Minimum value	1	Unit	Related control mode		
		Factory setting	131072	usr_p	P	V / Vz	T / Tz
		Maximum value	2147483647		MS	S	–

Parameter function: **MODBUS address: 1550**

Set denominator of internal position count unit (usr_p) conversion

Set the conversion formula between the number of motor revolutions (rev) and the internal position units of the drive (usr_p): the actual number of motor revolutions (rev) = the internal position units of the drive (usr_p) * P5-02 / P5-01.

Setting can only be modified if power stage is disabled.

Modified settings become active immediately.

P5-02	Numerator of internal position count unit (usr_p) conversion	Minimum value	1	Unit	Related control mode		
		Factory setting	1	rev	P	V / Vz	T / Tz
		Maximum value	2147483647		MS	S	–

Parameter function: **MODBUS address: 1552**

Set the internal position count unit (usr_p) conversion numerator

Set the conversion formula between the number of motor revolutions (rev) and the internal position units of the drive (usr_p): the actual number of motor revolutions (rev) = the internal position units of the drive (usr_p) * P5-02 / P5-01.

Setting can only be modified if power stage is disabled.

Modified settings become active immediately.

P5-03	Target velocity for searching the switch.	Minimum value	1	Unit	Related control mode		
		Factory setting	60	usr_v	P	V / Vz	T / Tz
		Maximum value	2147483647		MS	S	–

Parameter function: **MODBUS address: 10248**

Set target velocity for searching the switch during reference movement.

The adjustable value is internally limited to the parameter setting in P4-01.

Modified settings become active the next time the motor moves.

P5-04	Target velocity for moving away from switch.	Minimum value	1	Unit	Related control mode		
		Factory setting	6	usr_v	P	V / Vz	T / Tz
		Maximum value	2147483647		MS	S	–

Parameter function: **MODBUS address: 10250**

Set target velocity for moving away from switch during reference movement.

The adjustable value is internally limited to the parameter setting in P4-01.

Modified settings become active the next time the motor moves.

P5-05	Maximum search distance after over-travel of switch.	Minimum value	0	Unit	Related control mode		
		Factory setting	0	usr_p	P	V / Vz	T / Tz
		Maximum value	2147483647		MS	S	–

Parameter function: **MODBUS address: 10266**

Maximum search distance after over-travel of switch.

0: Monitoring of distance inactive

> 0: Maximum distance

The switch must be activated again within this search distance, otherwise the reference movement is canceled.

Modified settings become active the next time the motor moves.

P5-06	Maximum distance for search for switching point.	Minimum value	0	Unit	Related control mode		
		Factory setting	0	usr_p	P	V / Vz	T / Tz
		Maximum value	2147483647		MS	S	–

Parameter function: **MODBUS address: 10252**

Maximum distance for search for switching point.

0: Monitoring of distance inactive

> 0: Maximum distance

After detection of the switch, the drive starts to search for the defined switching point. If the defined switching point is not found within the distance defined here, the reference movement is canceled and an error is detected.

Modified settings become active the next time the motor moves.

P5-07	Distance from switching point	Minimum value	1	Unit	Related control mode		
		Factory setting	200	usr_p	P	V / Vz	T / Tz
		Maximum value	2147483647		MS	S	–

Parameter function: **MODBUS address: 10254**

Distance from switching point.

The distance from the switching point is defined as the reference point.

The parameter is only effective during a reference movement without index pulse

Modified settings become active the next time the motor moves.

P5-08	Position at reference point.	Minimum value	-2147483648	Unit	Related control mode		
		Factory setting	0	usr_p	P	V / Vz	T / Tz
		Maximum value	2147483647		MS	S	–

Parameter function: **MODBUS address: 10262**

Position at reference point.

After a successful reference movement, this position is automatically set at the reference point.

Modified settings become active the next time the motor moves.

P5-09	Homing mode	Minimum value	-4	Unit	Related control mode		
		Factory setting	18	–	P	V / Vz	T / Tz
		Maximum value	35		MS	S	–

Parameter function: **MODBUS address: 10260**

Homing mode

Switch type	Step 1	Step 2	Step 3	Step 4	Function code
Hard limit	Approach the mechanical hard limit by running forward at the velocity set via the parameter P5-03. At the start of Homing, torque will be limited to P5-39 HMtq_Lim (Homing: Torque Limit)	–	–	After hitting the mechanical limit position, if the torque reaches the torque limits, the velocity is near zero velocity, and this state is judged as the shaft reaching the mechanical limit position if it maintains P5-38 (Homing: Lock time). This position is used as the reference point.	-4
	Approach the mechanical hard limit by running negative at the velocity set via the parameter P5-03. At the start of Homing, torque will be limited to P5-39 HMtq_Lim (Homing: Torque Limit)	–	–	After hitting the mechanical limit position, if the torque reaches the torque limits, the velocity is near zero velocity, and this state is judged as the shaft reaching the mechanical limit position if it maintains P5-38 (Homing: Lock time). This position is used as the reference point.	-3
	Approach the mechanical hard limit by running forward at the velocity set via the parameter P5-03. At the start of Homing, torque will be limited to P5-39 HMtq_Lim (Homing: Torque Limit)	After hitting the mechanical limit position, if the torque reaches the torque limits, the velocity is near zero velocity, and if this state is maintained for a certain period of time, it is judged that the shaft reaches the mechanical limit position.	–	Change to low velocity and run in the negative direction, looking for the nearest Z-pulse position as the reference point.	-2
	Approach the mechanical hard limit by running negative at the velocity set via the parameter P5-03. At the start of Homing, torque will be limited to P5-39 HMtq_Lim (Homing: Torque Limit)	After hitting the mechanical limit position, if the torque reaches the torque limits, the velocity is near zero velocity, and if this state is maintained for a certain period of time, it is judged that the shaft reaches the mechanical limit position.	–	Change to low velocity and run in the negative direction, looking for the nearest Z-pulse position as the reference point.	-1
Limit switch	Search the negative limit switch in the negative direction at the velocity set via the parameter P5-03	Search the switching point of negative limit switching point in the positive direction at the velocity set via the parameter P5-04	–	Search the motor reference point in the positive direction at the velocity set via the parameter P5-04, and finally stop at a position outside the limit switch	1
				Achieve a positive offset distance as set via parameter P5-07 from the negative limit switch signal switching point at the velocity set via the parameter P5-04	17

P5-09	Homing mode	Minimum value	-4	Unit	Related control mode		
		Factory setting	18	–	P	V / Vz	T / Tz
		Maximum value	35		MS	S	–

Parameter function: **MODBUS address: 10260**

Switch type	Step 1	Step 2	Step 3	Step 4	Function code
	Search the positive limit switch in the positive direction at the velocity set via the parameter P5-03	Search the switching point of positive limit switch signal in the negative direction at the velocity set via the parameter P5-04	–	Search the motor reference point in the negative direction at the velocity set via the parameter P5-04, and finally stop at a position outside the limit switch	2
				Achieve a negative offset distance as set via parameter P5-07 from the positive limit switch signal switching point at the velocity set via the parameter P5-04	18
Reference switch	Search the homing switch in the positive direction at the velocity set via the parameter P5-03	Search the switching point of homing switch signal in the negative direction at the velocity set via the parameter P5-04	–	Search the motor reference point in the negative direction at the velocity set via the parameter P5-04, and finally stop at a position outside the homing switch	7
				Achieve a negative offset distance as set via parameter P5-07 from the homing switch signal switching point at the velocity set via the parameter P5-04	23
			Enter the home switch in the positive direction at the velocity set via the parameter P5-04	Search the motor reference point in the positive direction at the velocity set via the parameter P5-04, and finally stop at a position inside the homing switch	8
				Achieve a positive offset distance as set via parameter P5-07 from the homing switch signal switching point at the velocity set via the parameter P5-04	24
		Search the switching point of homing switch signal in the positive direction at the velocity set via the parameter P5-04	Enter the home switch in the negative direction at the velocity set via the parameter P5-04	Search the motor reference point in the negative direction at the velocity set via the parameter P5-04, and finally stop at a position inside the homing switch	9
				Achieve a negative offset distance as set via parameter P5-07 from the homing switch signal switching point at the velocity set via the parameter P5-04	25
			–	Search the motor reference point in the positive direction at the velocity set via the parameter P5-04, and finally stop at a position outside the homing switch	10
				Achieve a positive offset distance as set via parameter P5-07 from the homing switch signal switching point at the velocity set via the parameter P5-04	26
Reference switch	Search the homing switch in the negative direction at the velocity set via the parameter P5-03	Search the switching point of homing switch signal in the positive direction at the velocity set via the parameter P5-04	–	Search the motor reference point in the positive direction at the velocity set via the parameter P5-04, and finally stop at a position outside the limit switch	11
				Achieve a positive offset distance as set via parameter P5-07 from the homing switch signal switching point at the velocity set via the parameter P5-04	27
			Enter the home switch in the negative direction at the velocity set via the parameter P5-04	Search the motor reference point in the negative direction at the velocity set via the parameter P5-04, and finally stop at a position inside the homing switch	12
				Achieve a negative offset distance as set via parameter P5-07 from the homing switch signal switching point at the velocity set via the parameter P5-04	28
		Search the switching point of homing switch signal in the negative	Enter the home switch in the positive direction at the velocity set via	Search the motor reference point in the positive direction at the velocity set via the parameter P5-04, and finally stop at a position inside the homing switch	13

P5-09	Homing mode	Minimum value	-4	Unit	Related control mode		
		Factory setting	18	–	P	V / Vz	T / Tz
		Maximum value	35		MS	S	–

Parameter function: **MODBUS address: 10260**

Switch type	Step 1	Step 2	Step 3	Step 4	Function code
		direction at the velocity set via the parameter P5-04	the parameter P5-04	Achieve a positive offset distance as set via parameter P5-07 from the homing switch signal switching point at the velocity set via the parameter P5-04	29
			–	Search the motor reference point in the negative direction at the velocity set via the parameter P5-04, and finally stop at a position outside the homing switch	14
				Achieve a negative offset distance as set via parameter P5-07 from the homing switch signal switching point at the velocity set via the parameter P5-04	30
Motor origin	Search the motor homing in the negative direction at the velocity set via the parameter P5-04	–	–	–	33
	Search the motor homing in the positive direction at the velocity set via the parameter P5-04	–	–	–	34
	Position setting	–	–	–	35

P5-10	Offset motion distance 1	Minimum value	-2147483648	Unit	Related control mode		
		Factory setting	0	usr_p	P	–	–
		Maximum value	2147483647		MS	S	–

Parameter function: **MODBUS address: 10000**

Relative offset position of offset movement 1

Modified settings become active immediately.

P5-11	Offset motion distance 2	Minimum value	-2147483648	Unit	Related control mode		
		Factory setting	0	usr_p	P	–	–
		Maximum value	2147483647		MS	S	–

Parameter function: **MODBUS address: 10004**

Relative offset position of offset movement 2

Modified settings become active immediately.

P5-12	Target velocity of offset movements	Minimum value	1	Unit	Related control mode		
		Factory setting	60	usr_v	P	–	–
		Maximum value	2147483647		MS	S	–

Parameter function: **MODBUS address: 9992**

Target offset motion velocity

Modified settings become active immediately.

P5-13	Acceleration and deceleration of offset movement	Minimum value	1	Unit	Related control mode		
		Factory setting	600	usr_a	P	–	–
		Maximum value	2147483647		MS	S	–

Parameter function: **MODBUS address: 9996**

Acceleration and deceleration of offset movement

Setting can only be modified if power stage is disabled.

Modified settings become active the next time the motor moves.

P5-14	Stop mode of Halt	Minimum value	1	Unit	Related control mode		
		Factory setting	1	–	P	V / Vz	T / Tz
		Maximum value	3		MS	S	–

Parameter function: **MODBUS address: 1582**

Stop mode when Halt is activated

1 / Deceleration Ramp: Stop according to the deceleration ramp

3 / Torque Ramp: Stop according to the torque ramp

When [1 / Deceleration Ramp] is selected, the motor stops according to the deceleration ramp set via parameter P4-03.

When [3 / Torque Ramp] is selected, the motor stops according to the torque ramp set via parameter P5-15.

Modified parameters will not become active in the deceleration state.

Modified settings become active the next time the motor moves.

P5-15	Current for Halt	Minimum value	1	Unit	Related control mode		
		Factory setting	1	0.01 Arms	P	V / Vz	T / Tz
		Maximum value	46300		MS	S	–

Parameter function: **MODBUS address: 4380**

Current for Halt

In the case of a Halt, the current limit (_Imax_act) is one of the following values (whichever is lowest):

- The value set via this parameter
- Maximum current of motor
- Maximum output current of the drive

Further current limitations caused by I^2T monitoring are also taken into account during a Halt.

In increments of 0.01 Arms

Modified settings become active immediately.

P5-16	Quick Stop option code.	Minimum value	-2	Unit	Related control mode		
		Factory setting	6	–	P	V / Vz	T / Tz
		Maximum value	7		MS	S	–

Parameter function: **MODBUS address: 1584**

Quick Stop option code.

-2 / Torque ramp (Fault): Use torque ramp and transit to operating state 9 Fault

-1 / Deceleration Ramp (Fault): Use deceleration ramp and transit to operating state 9 Fault

6 / Deceleration ramp (Quick Stop): Use deceleration ramp and remain in operating state 7 Quick Stop

7 / Torque ramp (Quick Stop): Use torque ramp and remain in operating state 7 Quick Stop

When [-1/Deceleration Ramp (Error)] or [6/Deceleration Ramp (Quick Stop)] are selected, the motor stops according to the deceleration curve set in the parameter P5-17.

When [-2/Torque Ramp (Error)] or [7/Torque Ramp (Quick Stop)] are selected, the motor stops according to the deceleration torque set in the parameter P5-18.

Modified parameters will not become active in the deceleration state.

Modified settings become active the next time the motor moves.

P5-17	Deceleration ramp for Quick Stop	Minimum value	1	Unit	Related control mode		
		Factory setting	6000	usr_a	P	V / Vz	T / Tz
		Maximum value	2147483647		MS	S	–

Parameter function: **MODBUS address: 1572**

Deceleration ramp for Quick Stop

Deceleration ramp for a software stop or an error with error class 1 or 2.

Modified settings become active the next time the motor moves.

P5-18	Current for Quick Stop.	Minimum value	1	Unit	Related control mode		
		Factory setting	1	0.01 Arms	P	V / Vz	T / Tz
		Maximum value	46300		MS	S	–

Parameter function: **MODBUS address: 4378**

Current for Quick Stop.

In the case of a Quick Stop, the current limit (_Imax_act) is one of the following values (whichever is lowest):

- The value set via this parameter
- Maximum current of motor
- Maximum output current of the drive

Further current limitations caused by I2t monitoring are also taken into account during a Quick Stop.

In increments of 0.01 Arms

Modified settings become active immediately.

P5-19	Stop mode of the motor in case of the servo disabled or reporting error	Minimum value	0	Unit	Related control mode		
		Factory setting	0	–	P	V / Vz	T / Tz
		Maximum value	42		MS	S	–

Parameter function: **MODBUS address: 1680**

Stop mode of motor in case of the servo disabled or reporting error

Parameter value	Function	Value	Stop mode of servo motor	Status after the servo motor stops
L XXXX[]	Stop mode of the motor in case of a fault in Error Class 2...4	0	Free coasting	Free coasting
		1	Dynamic braking (DB)	Dynamic braking (DB)
		2	Dynamic braking (DB)	Free coasting
L XXX[]X	Stop mode of the motor after the servo is disabled	0	Free coasting	Free coasting
		1	Dynamic braking (DB)	Dynamic braking (DB)
		2	Dynamic braking (DB)	Free coasting
		3	Deceleration Ramp (DEC)	Dynamic braking (DB)
		4	Deceleration Ramp (DEC)	Free coasting

When 3 and 4 are selected as the stop mode of the motor after the servo is disabled, the motor stops using deceleration ramp set via the parameter P4-03.

For example:

When P5-19 = 0021:

- • If an error of Error Class 3/4 occurs, the motor will decelerate and stop using DB, and remain in the DB state after stopping.
- • If the motor is disabled during operation, the motor will decelerate and stop using DB, and remain in the free coasting state after stopping.

Modified settings become active immediately.

P5-20	Additional time delay for releasing the holding brake	Minimum value	0	Unit	Related control mode		
		Factory setting	0	1 ms	P	V / Vz	T / Tz
		Maximum value	400		MS	S	–

Parameter function: **MODBUS address: 1294**

Additional time delay for releasing the holding brake

The overall time delay for releasing the holding brake is the mechanical time for releasing the brake plus the time value set via this parameter.

Setting can only be modified if power stage is disabled.

Modified settings become active the next time the motor moves.

P5-21	Additional time delay for applying the holding brake.	Minimum value	0	Unit	Related control mode		
		Factory setting	0	1 ms	P	V / Vz	T / Tz
		Maximum value	1000		MS	S	–

Parameter function: **MODBUS address: 1296**

Additional time delay for applying the holding brake

The total time of applying the motor holding brake is the mechanical time of releasing the brake plus the time value set in this parameter.

Setting can only be modified if power stage is disabled.

Modified settings become active the next time the motor moves.

P5-22	Backlash compensation mode	Minimum value	0	Unit	Related control mode		
		Factory setting	0	–	P	–	–
		Maximum value	3		MS	S	–

Parameter function: **MODBUS address: 1666**

Backlash compensation mode

0 / Off: Backlash compensation is off.

1 / OnAfterPositiveMovement: Backlash compensation is on, last movement was in positive direction.

2 / OnAfterNegativeMovement: Backlash compensation is on, last movement was in negative direction.

3 / OnAfterPositiveOrNegativeMovement: Backlash compensation is on, last movement was in positive or negative direction.

Modified settings become active immediately.

P5-23	Backlash compensation value	Minimum value	0	Unit	Related control mode		
		Factory setting	0	usr_p	P	–	–
		Maximum value	2147483647		MS	S	–

Parameter function: **MODBUS address: 1668**

Backlash compensation value

Setting can only be modified if power stage is disabled.

Modified settings become active the next time the motor moves.

P5-24	Backlash compensation processing time	Minimum value	0	Unit	Related control mode		
		Factory setting	0	1 ms	P	–	–
		Maximum value	16383		MS	S	–

Parameter function: **MODBUS address: 1672**

Processing time for backlash compensation

Value 0: Immediate backlash compensation.

Value > 0: Processing time for backlash compensation.

Setting can only be modified if power stage is disabled.

Modified settings become active the next time the motor moves.

P5-25	Permissible direction of motor operation	Minimum value	1	Unit	Related control mode		
		Factory setting	3	–	P	V / Vz	T / Tz
		Maximum value	3		MS	S	–

Parameter function: **MODBUS address: 9738**

Permissible direction of motor operation

1 / Both: The motor is allowed to run in both positive and negative directions.

2 / Negative: The motor is allowed to run in the negative direction only.

3 / Both: The motor is allowed to run in both positive and negative directions.

Modified settings become active immediately.

P5-26	RMAC movement: target position	Minimum value	-2147483648	Unit	Related control mode		
		Factory setting	0	usr_p	P	V / Vz	T / Tz
		Maximum value	2147483647		–	–	–

Parameter function: **MODBUS address: 8986**

RMAC: Target position of relative movement after capture.

Modified settings become active immediately.

P5-27	RMAC: target velocity	Minimum value	0	Unit	Related control mode		
		Factory setting	0	usr_v	P	V / Vz	T / Tz
		Maximum value	2147483647		–	–	–

Parameter function: **MODBUS address: 8988**

RMAC movement: target velocity of RMAC.

Modified settings become active immediately.

P5-28	RMAC: reaction when over-travel of target position	Minimum value	0	Unit	Related control mode		
		Factory setting	0	–	P	V / Vz	T / Tz
		Maximum value	2		–	–	–

Parameter function: **MODBUS address: 8990**

0 / Error Class 1

1 / No Movement To Target Position

2 / Movement To Target Position

Modified settings become active immediately.

P5-29	RMAC movement: triggering the edge mode of signals	Minimum value	0	Unit	Related control mode		
		Factory setting	0	–	P	V / Vz	T / Tz
		Maximum value	1		–	–	–

Parameter function: **MODBUS address: 8992**

0 / Falling Edge: Falling edge

1 / Rising Edge: Rising edge

Modified settings become active immediately.

P5-32	MOD_Enable	Minimum value	0	Unit	Related control mode		
		Factory setting	0	–	–	–	–
		Maximum value	1		MS	–	–

Parameter function: **MODBUS address: 1648**

Activation of Modulo function

0 / Modulo Off: Modulo is off

1 / Modulo On: Modulo is on

Setting can only be modified if power stage is disabled.

Modified settings become active immediately.

P5-33	MOD_Min	Minimum value	-2147483648	Unit	Related control mode		
		Factory setting	0	usr_p	–	–	–
		Maximum value	2147483647		MS	–	–

Parameter function: **MODBUS address: 1650**

Minimum position of modulo range

The minimum position value of the modulo range must be less than the maximum position value of the modulo range.

Setting can only be modified if power stage is disabled.

Modified settings become active immediately.

P5-34	MOD_Max	Minimum value	-2147483648	Unit	Related control mode		
		Factory setting	3600	usr_p	–	–	–
		Maximum value	2147483647		MS	–	–

Parameter function: **MODBUS address: 1652**

Maximum position of modulo range

The maximum position value of the modulo range must be greater than the minimum position value of the modulo range.

Setting can only be modified if power stage is disabled.

Modified settings become active immediately.

P5-35	MOD_AbsDirection	Minimum value	0	Unit	Related control mode		
		Factory setting	0	usr_p	–	–	–
		Maximum value	2		MS	–	–

Parameter function: **MODBUS address: 1654**

Direction of absolute movement with modulo

0 / Shortest Distance: Movement with shortest distance

1 / Positive Direction: Movement only in positive direction

2 / Negative Direction: Movement only in negative direction

If the parameter is set to 0, the drive calculates the shortest way to the new target position and starts the movement in the corresponding direction. If the distance to the target position is identical in positive and negative directions, the movement takes place in positive direction.

Modified settings become active immediately.

P5-36	MOD_ABSMultiRng	Minimum value	0	Unit	Related control mode		
		Factory setting	0	usr_p	–	–	–
		Maximum value	1		MS	–	–

Parameter function: **MODBUS address: 1656**

Multiple ranges for absolute movement with modulo

0 / Multiple Ranges Off: Absolute movement in one modulo range

1 / Multiple Ranges On: Absolute movement in multiple modulo ranges

Modified settings become active immediately.

P5-37	HMI display when motor moves	Minimum value	0	Unit	Related control mode		
		Factory setting	0	UINT16	P	V / Vz	T / Tz
		Maximum value	31		MS	S	–

Parameter function: **MODBUS address: 14860**

0: The current status of the drive

1: Command position, with the unit of the external input pulse used

2: Actual position, with the unit of the external input pulse used

3: Command position, with the unit of the internal input pulse used

4: Actual position, with the unit of the internal input pulse used

5: Position error, with the unit of the internal input pulse used

6: Command velocity of the motor

7: Actual velocity of the motor

8: Command current of the motor (“Q” current for producing torque)

9: Actual current of the motor (“Q” current for producing torque)

10: Actual total current of the motor

11: Drive input point status

12: Drive output point status

13: State of analog input channel 1 (mV)

14: State of analog input channel 2 (mV)

15: State of analog output channel 1 (mV)

16: State of analog output channel 2 (mV)

17: Current voltage of the drive DC bus

18: Usage of the drive DC bus

19: Average output power of the drive power stage

20: Average load factor of the drive power stage

21: Average load factor of the motor

22: Average load factor of the braking resistor

23: Overload rate of the drive power stage (%)

24: Temperature of the drive power stage

25: Temperature of the drive equipment

26: A warning that the current fault level is 0

27: An error that the current fault level is 1...4

28: All current warnings grouped in characters (fault level 0)

29: Operation hours of the drive

30: The power-on number of the drive

31: Saved monitoring signal status

Modified settings become active immediately.

P5-38	Homing: Lock time	Minimum value	10	Unit	Related control mode		
		Factory setting	1000	ms	P	V / Vz	T / Tz
		Maximum value	10000		MS	S	–

Parameter function: **MODBUS address: 10272**

Lock time for Homing

Modified settings become active immediately.

P5-39	Homing: Torque limit	Minimum value	0	Unit	Related control mode		
		Factory setting	1000	0.1%	P	V / Vz	T / Tz
		Maximum value	3500		MS	S	–

Parameter function: **MODBUS address: 10274**

Torque limit for Homing

Modified settings become active immediately.

P5-40	Homing: Timeout setting	Minimum value	10	Unit	Related control mode		
		Factory setting	60	s	P	V / Vz	T / Tz
		Maximum value	65535		MS	S	–

Parameter function: **MODBUS address: 10276**

Homing timeout

Modified settings become active immediately.

P5-42	*PosReg1Mode*	Minimum value	0	Unit	Related control mode		
		Factory setting	0	–	P	V / Vz	T / Tz
		Maximum value	5		MS	S	–

Parameter function: **MODBUS address: 2824**

0 / Greater than or equal to A: The actual position of position register channel 1 is greater than or equal to comparison value A.

1 / Less than or equal to A: The actual position of position register channel 1 is less than or equal to comparison value A.

2 / Within [A-B] range (Basic): Actual position falls within the A-B range, including limits (Basic).

3 / [A-B] Out of Range (Basic): Actual position exceeds range A-B, excluding limits (Basic).

4 / [A-B] Within Range (Extended): Actual position within range A-B, including limits (Extended).

5 / [A-B] Out of Range (Extended): Actual position exceeds range A-B, excluding limits (Extended).

Modified settings become active immediately.

P5-43	*PosReg1ValueA*	Minimum value	-2147483648	Unit	Related control mode		
		Factory setting	0	usr_p	P	V / Vz	T / Tz
		Maximum value	2147483647		MS	S	–

Parameter function: **MODBUS address: 2832**

Comparison value A for location register channel 1

P5-44	*PosReg1ValueB*	Minimum value	-2147483648	Unit	Related control mode		
		Factory setting	0	usr_p	P	V / Vz	T / Tz
		Maximum value	2147483647		MS	S	–

Parameter function: **MODBUS address: 2834**

Comparison value B for location register channel 1

P5-46	*PosReg2Mode*	Minimum value	0	Unit	Related control mode		
		Factory setting	0	–	P	V / Vz	T / Tz
		Maximum value	5		MS	S	–

Parameter function: **MODBUS address: 2826**

0 / Greater than or equal to A: The actual position of position register channel 2 is greater than or equal to comparison value A.

1 / Less than or equal to A: The actual position of position register channel 2 is less than or equal to comparison value A.

2 / Within [A-B] range (Basic): Actual position falls within the A-B range, including limits (Basic).

3 / [A-B] Out of Range (Basic): Actual position exceeds range A-B, excluding limits (Basic).

4 / [A-B] Within Range (Extended): Actual position within range A-B, including limits (Extended).

5 / [A-B] Out of Range (Extended): Actual position exceeds range A-B, excluding limits (Extended).

Modified settings become active immediately.

P5-47	*PosReg2ValueA*	Minimum value	-2147483648	Unit	Related control mode		
		Factory setting	0	usr_p	P	V / Vz	T / Tz
		Maximum value	2147483647		MS	S	–

Parameter function: **MODBUS address: 2836**

Comparison value A for location register channel 2

P5-48	*PosReg2ValueB*	Minimum value	-2147483648	Unit	Related control mode		
		Factory setting	0	usr_p	P	V / Vz	T / Tz
		Maximum value	2147483647		MS	S	–

Parameter function: **MODBUS address: 2838**

Comparison value B for location register channel 2

P5-50	*PosReg3Mode*	Minimum value	0	Unit	Related control mode		
		Factory setting	0	–	P	V / Vz	T / Tz
		Maximum value	5		MS	S	–

Parameter function: **MODBUS address: 2844**

0 / Greater than or equal to A: The actual position of position register channel 3 is greater than or equal to comparison value A.

1 / Less than or equal to A: The actual position of position register channel 3 is less than or equal to comparison value A.

2 / Within [A-B] range (Basic): Actual position falls within the A-B range, including limits (Basic).

3 / [A-B] Out of Range (Basic): Actual position exceeds range A-B, excluding limits (Basic).

4 / [A-B] Within Range (Extended): Actual position within range A-B, including limits (Extended).

5 / [A-B] Out of Range (Extended): Actual position exceeds range A-B, excluding limits (Extended).

Modified settings become active immediately.

P5-51	*PosReg3ValueA*	Minimum value	-2147483648	Unit	Related control mode		
		Factory setting	0	usr_p	P	V / Vz	T / Tz
		Maximum value	2147483647		MS	S	–

Parameter function: **MODBUS address: 2852**

Comparison value A for location register channel 3

P5-52	*PosReg3ValueB*	Minimum value	-2147483648	Unit	Related control mode		
		Factory setting	0	usr_p	P	V / Vz	T / Tz
		Maximum value	2147483647		MS	S	–
Parameter function:			**MODBUS address: 2854**				
Comparison value B for location register channel 3							

P5-54	*PosReg4Mode*	Minimum value	0	Unit	Related control mode		
		Factory setting	0	–	P	V / Vz	T / Tz
		Maximum value	5		MS	S	–
Parameter function:			**MODBUS address: 2846**				

0 / Greater than or equal to A: The actual position of position register channel 4 is greater than or equal to comparison value A.

1 / Less than or equal to A: The actual position of position register channel 4 is less than or equal to comparison value A.

2 / Within [A-B] range (Basic): Actual position falls within the A-B range, including limits (Basic).

3 / [A-B] Out of Range (Basic): Actual position exceeds range A-B, excluding limits (Basic).

4 / [A-B] Within Range (Extended): Actual position within range A-B, including limits (Extended).

5 / [A-B] Out of Range (Extended): Actual position exceeds range A-B, excluding limits (Extended).

Modified settings become active immediately.

P5-55	*PosReg4ValueA*	Minimum value	0	Unit	Related control mode		
		Factory setting	0	–	P	V / Vz	T / Tz
		Maximum value	5		MS	S	–
Parameter function:			**MODBUS address: 2844**				
Location Register Channel 3 Comparison Standard Selection							

P5-56	*PosReg4ValueB*	Minimum value	0	Unit	Related control mode		
		Factory setting	0	–	P	V / Vz	T / Tz
		Maximum value	5		MS	S	–
Parameter function:			**MODBUS address: 2846**				
Location Register Channel 4 Comparison Standard Selection							

P5-57	*PosRegGroupStart*	Minimum value	0	Unit	Related control mode		
		Factory setting	0	–	P	V / Vz	T / Tz
		Maximum value	15		MS	S	–

Parameter function: **MODBUS address: 2860**

0 / No Channel: No channel activated

1 / Channel 1: Channel 1 activated

2 / Channel 2: Channel 2 activated

3 / Channels 1 and 2: Channels 1 and 2 activated

4 / Channel 3: Channel 3 activated

5 / Channels 1 and 3: Channels 1 and 3 activated

6 / Channels 2 and 3: Channels 2 and 3 activated

7 / Channels 1, 2, and 3: Channels 1, 2, and 3 activated

8 / Channel 4: Channel 4 activated

9 / Channel 1 and 4: Channels 1 and 4 activated

10 / Channel 2 and 4: Channels 2 and 4 activated

11 / Channel 1, 2, and 4: Channels 1, 2, and 4 activated

12 / Channel 3 and 4: Channels 3 and 4 activated

13 / Channels 1, 3, and 4: Channels 1, 3, and 4 activated

14 / Channels 2, 3, and 4: Channels 2, 3, and 4 activated

15 / Channels 1, 2, 3, and 4: Channels 1, 2, 3, and 4 activated

Modified settings become active immediately.

P6 - Special settings

P6-00	Motor model	Minimum value	0	Unit	Related control mode		
		Factory setting	0	–	P	V / Vz	T / Tz
		Maximum value	4294967295		MS	S	–

Parameter function:

MODBUS address: 23342

Motor model

Unselected motor = 0,

BCH18LBA53*2A5C=337

BCH18LBA53*2F5C=338

BCH18MBA53*2A5C=339

BCH18MBA53*2F5C=340

BCH18LB013*2A5C=257

BCH18LB013*2F5C=258

BCH18MB013*2A5C=259

BCH18MB013*2F5C=260

BCH18MD013*2A5C=261

BCH18MD013*2F5C=262

BCH18LD023*2A5C=513

BCH18LD023*2F5C=514

BCH18MD023*2A5C=515

BCH18MD023*2F5C=516

BCH18MF023*2A5C=517

BCH18MF023*2F5C=518

BCH18LD043*2A5C=1025

BCH18LD043*2F5C=1026

BCH18MD043*2A5C=1027

BCH18MD043*2F5C=1028

BCH18MF043*2A5C=1029

BCH18MF043*2F5C=1030

BCH18LF073*2A5C=1793

BCH18LF073*2F5C=1794

BCH18MF073*2A5C=1795

BCH18MF073*2F5C=1796

BCH18MM081*2A6C=2049

BCH18MM081*2F6C=2050

BCH18LF103*2A5C=4097

BCH18LF103*2F5C=4098

BCH18LH103*2A6C=4099

BCH18LH103*2F6C=4100

BCH18MF103*2A5C=4101

BCH18MF103*2F5C=4102

BCH18MM131*2A6C=4865

BCH18MM131*2F6C=4866

BCH18LH153*2A6C=5377

P6-00	Motor model	Minimum value	0	Unit	Related control mode		
		Factory setting	0	–	P	V / Vz	T / Tz
		Maximum value	4294967295		MS	S	–

Parameter function: **MODBUS address: 23342**

BCH18LH153*2F6C=5378

BCH18MM181*2A6C=6145

BCH18MM181*2F6C=6146

BCH18LH203*2A6C=8193

BCH18LH203*2F6C=8194

BCH18MR241*2A6C=9217

BCH18MR241*2F6C=9218

BCH18LM303*2A6C=12289

BCH18LM303*2F6C=12290

Read-only parameters.

P6-01	Motor encoder type	Minimum value	8	Unit	Related control mode		
		Factory setting	8	–	P	V / Vz	T / Tz
		Maximum value	65535		MS	S	–

Parameter function: **MODBUS address: 3334**

Motor encoder type

8/BISS: Communication type high precision encoder.

Read-only parameters.

P6-02	Device firmware version	Minimum value	0	Unit	Related control mode		
		Factory setting	0	–	P	V / Vz	T / Tz
		Maximum value	65535		MS	S	–

Parameter function: **MODBUS address: 260**

Device firmware version

The device firmware version format is XX.YY.ZZ.

Where XX.YY is used to record the firmware version of the device and contained in this parameter.

ZZ is used to record the device firmware revision and stored in P6-03.

For example: V01.23.45

The value stored in this parameter is 123.

Read-only parameters.

P6-03	Device firmware revision	Minimum value	0	Unit	Related control mode		
		Factory setting	0	–	P	V / Vz	T / Tz
		Maximum value	65535		MS	S	–

Parameter function: **MODBUS address: 264**

Device firmware revision

The device firmware version format is XX.YY.ZZ.

XX.YY is used to record the device firmware revision and stored in P6-02.

ZZ is used to record the device firmware revision and stored in this parameter.

For example: V01.23.45

The value stored in this parameter is 45.

Read-only parameters.

P6-04	Modbus address	Minimum value	1	Unit	Related control mode		
		Factory setting	1	–	P	V / Vz	T / Tz
		Maximum value	247		MS	S	–

Parameter function: **MODBUS address: 5640**

Modbus address

The value set via this parameter is the MODBUS address of this device. When adopting RS-485 communication, a group of servo drives on the same network must be set with a unique address. If the address is repeatedly set, normal communication will not be possible.

Modified settings become active the next time the product is powered on.

P6-05	MODBUS communication baud rate	Minimum value	9600	Unit	Related control mode		
		Factory setting	19200	bps	P	V / Vz	T / Tz
		Maximum value	38400		MS	S	–

Parameter function: **MODBUS address: 5638**

MODBUS communication baud rate

9600 / 9600 Baud / 19..2: 19200 Baud

19200 / 19200 Baud / 19..2: 19200 Baud

38400 / 38400 Baud / 19..2: 19200 Baud

The value set via this parameter is the MODBUS communication baud rate of this device. When adopting RS-485 communication, the length of the communication cable is inversely proportional to the communication baud rate.

Modified settings become active the next time the product is powered on.

P6-06	MODBUS communication data format	Minimum value	1	Unit	Related control mode		
		Factory setting	2	–	P	V / Vz	T / Tz
		Maximum value	4		MS	S	–

Parameter function: **MODBUS address: 5642**

MODBUS communication data format

1/8, N, 1:8 bits, no check, 1 stop bit

2/8, N, 1:8 bits, even parity check, 1 stop bit

3/8, N, 1:8 bits, odd parity check, 1 stop bit

4/8, N, 2:8 bits, no check, 2 stop bits

The value set via this parameter is the MODBUS communication data format of this device.

Modified settings become active the next time the product is powered on.

P6-07	First error code	Minimum value	0	Unit	Related control mode		
		Factory setting	0	–	P	V / Vz	T / Tz
		Maximum value	65535		MS	S	–

Parameter function: **MODBUS address: 15116**

First error code

This parameter specifies the error code of an error of error classes 1 ... 4 which is to activate the signal output function.

Modified settings become active immediately.

P6-08	Signal output function Selected Error (error classes 1 to 4): Second error code.	Minimum value	0	Unit	Related control mode		
		Factory setting	0	–	P	V / Vz	T / Tz
		Maximum value	65535		MS	S	–

Parameter function: **MODBUS address: 15118**

Signal output function Selected Error (error classes 1 to 4): Second error code.

This parameter specifies the error code of an error of error classes 1 ... 4 which is to activate the signal output function.

Modified settings become active immediately.

P6-09	Signal output function Selected Warning (error class 0): First error code	Minimum value	0	Unit	Related control mode		
		Factory setting	0	–	P	V / Vz	T / Tz
		Maximum value	65535		MS	S	–

Parameter function: **MODBUS address: 15120**

Signal output function Selected Warning (error class 0): First error code

This parameter specifies the error code of an error of error class 0 which is to activate the signal output function.

Modified settings become active immediately.

P6-10	Signal output function Selected Warning (error class 0): Second error code	Minimum value	0	Unit	Related control mode		
		Factory setting	0	–	P	V / Vz	T / Tz
		Maximum value	65535		MS	S	–

Parameter function: **MODBUS address: 15122**

Signal output function Selected Warning (error class 0): Second error code

This parameter specifies the error code of an error of error class 0 which is to activate the signal output function.

Modified settings become active immediately.

P6-11	Activation of software limit switches	Minimum value	0	Unit	Related control mode		
		Factory setting	0	–	P	–	–
		Maximum value	3		MS	S	–

Parameter function: **MODBUS address: 1542**

Activation of software limit switches

0 / None: Deactivated

1 / SWLIMP: Activation of software limit switches positive direction

2 / SWLIMN: Activation of software limit switches negative direction

3 / SWLIMP+SWLIMN: Activation of software limit switches both directions

Software limit switches can only be activated if the zero point is valid.

Modified settings become active immediately.

P6-12	Behavior when position limit is reached.	Minimum value	0	Unit	Related control mode		
		Factory setting	0	–	P	V / Vz	T / Tz
		Maximum value	1		MS	S	–

Parameter function: **MODBUS address: 1678**

Behavior when position limit is reached.

0 / Standstill Behind Position Limit: Quick Stop is triggered at position limit and standstill is reached behind position limit.

1 / Standstill At Position Limit: Quick Stop is triggered in front of position limit and standstill is reached at position limit.

Modified settings become active immediately.

P6-13	Positive position limit for software limit switch	Minimum value	-2147483648	Unit	Related control mode		
		Factory setting	2147483647	usr_p	P	–	–
		Maximum value	2147483647		MS	S	–

Parameter function: **MODBUS address: 1544**

Positive limit position value

If a user-defined value entered is outside of the permissible range, the limit switch limits are automatically set to the maximum user-defined value.

Setting can only be modified if power stage is disabled.

Modified settings become active the next time the motor moves.

P6-14	Negative position limit for software limit switch	Minimum value	-2147483648	Unit	Related control mode		
		Factory setting	-2147483648	usr_p	P	–	–
		Maximum value	2147483647		MS	S	–

Parameter function: **MODBUS address: 1546**

Value of negative software limit position

If a user-defined value entered is outside of the permissible range, the limit switch limits are automatically set to the minimum user-defined value.

Setting can only be modified if power stage is disabled.

Modified settings become active the next time the motor moves.

P6-15	Standstill window, permissible control deviation.	Minimum value	0	Unit	Related control mode		
		Factory setting	128	usr_p	P	–	–
		Maximum value	2147483647		MS	S	–

Parameter function: **MODBUS address: 1664**

Standstill window, permissible control deviation.

The control deviation for the standstill window time must be within this range for a standstill of the drive to be detected. Processing of the standstill window must be activated via P6-16.

Modified settings become active immediately.

P6-16	Standstill window, time	Minimum value	0	Unit	Related control mode		
		Factory setting	0	1 ms	P	–	–
		Maximum value	32767		MS	S	–

Parameter function: **MODBUS address: 1610**

Standstill window, time

Value 0: Monitoring of standstill window deactivated

Value > 0: Time in ms during which the control deviation must be in the standstill window.

Modified settings become active immediately.

P6-17	Timeout time for standstill window monitoring.	Minimum value	0	Unit	Related control mode		
		Factory setting	0	1 ms	P	–	–
		Maximum value	16000		MS	S	–

Parameter function: **MODBUS address: 1612**

Timeout time for standstill window monitoring

Value 0: Timeout monitoring deactivated

Value >0: Timeout time in ms.

Timeout monitoring starts timing from reaching the target position (position loop command position) or the completion of the internal task position command.

Modified settings become active immediately.

P6-18	Velocity window, permissible deviation	Minimum value	1	Unit	Related control mode		
		Factory setting	10	usr_v	–	V / Vz	–
		Maximum value	2147483647		MS	S	–

Parameter function: **MODBUS address: 1576**

Velocity window, permissible deviation

The control deviation for the standstill window time must be within this range for a standstill of the drive to be detected. Processing of the standstill window must be activated via P6-19.

Modified settings become active immediately.

P6-19	Velocity window, time.	Minimum value	0	Unit	Related control mode		
		Factory setting	0	1 ms	–	V / Vz	–
		Maximum value	16383		MS	S	–

Parameter function: **MODBUS address: 1578**

Velocity window, time.

Value 0: Velocity window monitoring deactivated

Value > 0: Time in ms during which the control deviation must be in the standstill window.

Modified settings become active immediately.

P6-20	Torque window, permissible deviation	Minimum value	0	Unit	Related control mode		
		Factory setting	30	0.1%	–	–	T / Tz
		Maximum value	30000		–	–	–

Parameter function: **MODBUS address: 1626**

Torque window, permissible deviation

The control deviation for the standstill window time must be within this range for a standstill of the drive to be detected. Processing of the standstill window must be activated via P6-21.

Modified settings become active immediately.

P6-21	Torque window, time.	Minimum value	0	Unit	Related control mode		
		Factory setting	0	1 ms	–	–	T / Tz
		Maximum value	16383		–	–	–

Parameter function: **MODBUS address: 1628**

Torque window, time.

Value 0: Torque window monitoring deactivated.

Value > 0: Time in ms during which the control deviation must be in the standstill window.

Modified settings become active immediately.

P6-22	Position monitoring: position following error range 1	Minimum value	0	Unit	Related control mode		
		Factory setting	128	usr_p	P	–	–
		Maximum value	2147483647		MS	S	–

Parameter function: **MODBUS address: 1662**

Monitoring of position deviation 1

The system verifies whether the drive is within the defined deviation during the period set with P6-26.

The status can be output via a parameterizable output.

Modified settings become active immediately.

P6-23	Position monitoring: Output mode 1 of position deviation monitoring	Minimum value	0	Unit	Related control mode		
		Factory setting	0	–	P	–	–
		Maximum value	5		MS	S	–

Parameter function: **MODBUS address: 1706**

0 / Position reached

1 / Command reached

2 / Command reached with output latched

3 / Position reached with time window

4 / Command reached with time window

5 / Motion finished

Modified settings become active immediately.

P6-24	Position monitoring: position following error range 2	Minimum value	0	Unit	Related control mode		
		Factory setting	128	usr_p	P	–	–
		Maximum value	2147483647		MS	S	–

Parameter function: **MODBUS address: 1700**

Monitoring of position deviation 2

The system verifies whether the drive is within the defined deviation during the period set with P6-29.

The status can be output via a parameterizable output.

Modified settings become active immediately.

P6-25	Position monitoring: Output mode 2 of position deviation monitoring	Minimum value	0	Unit	Related control mode		
		Factory setting	0	–	P	–	–
		Maximum value	5		MS	S	–

Parameter function: **MODBUS address: 1708**

0 / Position reached

1 / Command reached

2 / Command reached with output latched

3 / Position reached with time window

4 / Command reached with time window

5 / Motion finished

Modified settings become active immediately.

P6-26	Position monitoring: time window.	Minimum value	0	Unit	Related control mode		
		Factory setting	0	1 ms	P	–	–
		Maximum value	9999		MS	S	–

Parameter function: **MODBUS address: 1594**

Monitoring of time window.

Adjustment of a time for monitoring of position deviation. If the monitored value is in the permissible range during the adjusted time, the monitoring function delivers a positive result.

Modified settings become active immediately.

P6-27	Monitoring of velocity deviation.	Minimum value	1	Unit	Related control mode		
		Factory setting	10	usr_v	–	V / Vz	–
		Maximum value	2147483647		MS	S	–

Parameter function: **MODBUS address: 1588**

Monitoring of velocity deviation.

The system monitors whether the drive is within the defined deviation during the period set with P6-29.

The status can be output via a parameterizable output.

Modified settings become active immediately.

P6-28	Monitoring of velocity threshold	Minimum value	1	Unit	Related control mode		
		Factory setting	10	usr_v	–	V / Vz	–
		Maximum value	2147483647		MS	S	–

Parameter function: **MODBUS address: 1590**

Monitoring of velocity threshold

The system monitors whether the drive is below the defined value during the period set with P6-29.

The status can be output via a parameterizable output.

Modified settings become active immediately.

P6-29	Velocity monitoring: Monitoring window time	Minimum value	0	Unit	Related control mode		
		Factory setting	0	1 ms	–	V / Vz	–
		Maximum value	9999		MS	S	–

Parameter function: **MODBUS address: 1696**

Monitoring of time window.

Adjustment of a time for monitoring of velocity deviation and threshold. If the monitored value is in the permissible range during the adjusted time, the monitoring function delivers a positive result.

Modified settings become active immediately.

P6-30	Torque monitoring: Torque monitoring threshold	Minimum value	0	Unit	Related control mode		
		Factory setting	600	0.1%	–	V / Vz	–
		Maximum value	30000		–	–	–

Parameter function: **MODBUS address: 1592**

Monitoring of current threshold.

The system monitors whether the drive is below the defined value during the period set with P6-31.

In increments of 0.1%.

Modified settings become active immediately.

P6-31	Torque monitoring: Monitoring window time	Minimum value	0	Unit	Related control mode		
		Factory setting	0	1 ms	–	V / Vz	–
		Maximum value	9999		–	–	–

Parameter function: **MODBUS address: 1710**

Monitoring of time window.

Adjustment of a time for monitoring of current threshold. If the monitored value is in the permissible range during the adjusted time, the monitoring function delivers a positive result.

Modified settings become active immediately.

P6-32	Advisory limit of the load-dependent position deviation (error class 0).	Minimum value	0	Unit	Related control mode		
		Factory setting	75	0.1 rev	P	–	–
		Maximum value	100		MS	S	–

Parameter function: **MODBUS address: 1618**

Advisory limit of the load-dependent position deviation (error class 0).

Modified settings become active immediately.

P6-33	Error response to excessively high load-dependent position deviation	Minimum value	1	Unit	Related control mode		
		Factory setting	3	–	P	–	–
		Maximum value	3		MS	S	–

Parameter function: **MODBUS address: 1302**

Error response to excessively high load-dependent position deviation

1 / Error Class 1

2 / Error Class 2

3 / Error Class 3

Setting can only be modified if power stage is disabled.

Modified settings become active the next time the motor moves.

P6-34	Maximum load-dependent velocity deviation	Minimum value	0	Unit	Related control mode		
		Factory setting	0	usr_v	P	V / Vz	–
		Maximum value	2147483647		MS	S	–

Parameter function: **MODBUS address: 1712**

Maximum load-dependent velocity deviation

Modified settings become active immediately.

P6-35	Time window for maximum load-dependent velocity deviation.	Minimum value	0	Unit	Related control mode		
		Factory setting	10	1 ms	P	V / Vz	–
		Maximum value	9999		MS	S	–

Parameter function: **MODBUS address: 1714**

Monitoring of time window.

Adjustment of a time for monitoring of position deviation, velocity deviation, velocity value and current value. If the monitored value is in the permissible range during the adjusted time, the monitoring function delivers a positive result.

Modified settings become active immediately.

P6-36	Error response to excessively high load-dependent velocity deviation	Minimum value	1	Unit	Related control mode		
		Factory setting	3	–	P	V / Vz	–
		Maximum value	3		MS	S	–

Parameter function: **MODBUS address: 1716**

Error response to excessively high load-dependent velocity deviation

1 / Error Class 1

2 / Error Class 2

3 / Error Class 3

Setting can only be modified if power stage is disabled.

Modified settings become active the next time the motor moves.

P6-37	Error response to analog 1 channel disconnection	Minimum value	0	Unit	Related control mode		
		Factory setting	0	–	–	V / Vz	T / Tz
		Maximum value	3		–	–	–

Parameter function: **MODBUS address: 1400**

Error response to analog channel 1 disconnection

0 / Error Class 0

1 / Error Class 1

2 / Error Class 2

3 / Error Class 3

Setting can only be modified if power stage is disabled.

Modified settings become active the next time the motor moves.

P6-38	Error response to 100% I2t braking resistor.	Minimum value	0	Unit	Related control mode		
		Factory setting	0	–	P	V / Vz	T / Tz
		Maximum value	2		MS	S	–

Parameter function: **MODBUS address: 1348**

Error response to 100% I2t braking resistor.

0 / Error Class 0

1 / Error Class 1

2 / Error Class 2

Setting can only be modified if power stage is disabled.

Modified settings become active the next time the motor moves.

P6-39	Current command saturation alarm time	Minimum value	0	Unit	Related control mode		
		Factory setting	5500	1 ms	P	V / Vz	T / Tz
		Maximum value	10000		MS	S	–

Parameter function: **MODBUS address: 1392**

Drive power stage current command saturation alarm time

When the current command I_{cmd} of the drive power stage is equal to the saturation current I_{sat}, and the saturation current I_{sat} is greater than 115% of the motor rated current M_I_n, the system starts the drive power stage command current saturation monitoring countdown.

The saturation current I_{sat} is one of the following values (whichever is lowest):

- • Current limit of the current system
- • Max. motor current (M_I_{max})
- • Max. output current of drive (PS_I_{max})

Countdown time is $T = M_I_{max}^2 * P6\text{-}24 / I_{sat}^2$.

When the countdown is over, the system triggers an error 5604 of error class 3.

Once I_{cmd} is lower than I_{sat} during the countdown, the countdown is reset.

Setting can only be modified if power stage is disabled.

Modified settings become active immediately.

P6-40	Fault masking	Minimum value	0	Unit	Related control mode		
		Factory setting	4224	–	P	V / Vz	T / Tz
		Maximum value	4294967295		MS	S	–

Parameter function: **MODBUS address: 16148**

Fault masking

Parameter value	Bit	Description	Related error number	Function	
L XXXX[]	0	Reserved	–	–	–

P6-40	Fault masking	Minimum value	0	Unit	Related control mode		
		Factory setting	4224	–	P	V / Vz	T / Tz
		Maximum value	4294967295		MS	S	–

Parameter function: **MODBUS address: 16148**

Parameter value	Bit	Description	Related error number	Function	
	1	Reserved	–	–	–
	2	Reserved	–	–	–
	3	Reserved	–	–	–
L XXX[]X	4	Reserved	–	–	–
	5	Reserved	–	–	–
	6	Reserved	–	–	–
	7	Drive power stage or motor overload (I^2T)	4102 4302	0	The current output of the drive power stage is limited in the event of an overload (I^2T)
				1	The error 4102 or error 4302 of error class 3 is triggered in the event of an overload (I^2T)
L XX[]XX	8	Reserved	–	–	–
	9	DC bus under-voltage	3201 3202	0	The error number 3201 or the error number 3202 is not stored in the failure history storage area of the device
				1	The error number 3201 or the error number 3202 is stored in the failure history storage area of the device
	10	Reserved	–	–	–
	11	Reserved	–	–	–
L X[]XXX	12	Multi-turn absolute encoder undervoltage warning	7634 7635	0	Connect the battery, and the connected motor functions as a multi-turn absolute encoder motor.
			–	1	Shield the battery, and the connected motor functions as an incremental motor.
	13	Input phase loss alarm	3207	0	Input phase loss alarm activated
			–	1	Input phase loss alarm suppression
	14	Reserved	–	–	–
	15	Reserved	–	–	–
L []XXXX	16	Reserved	–	–	–
	17	Reserved	–	–	–
	18	Reserved	–	–	–
	19	Reserved	–	–	–
H XXXX[]	20	Reserved	–	–	–
	21	Reserved	–	–	–
	22	Reserved	–	–	–
	23	Reserved	–	–	–
H XXX[]X	24	Reserved	–	–	–
	25	Reserved	–	–	–
	26	Reserved	–	–	–
	27	Reserved	–	–	–
H XX[]XX	28	Reserved	–	–	–
	29	Reserved	–	–	–
	30	Reserved	–	–	–
	31	Reserved	–	–	–

For example:

P6-40	Fault masking	Minimum value	0	Unit	Related control mode		
		Factory setting	4224	–	P	V / Vz	T / Tz
		Maximum value	4294967295		MS	S	–
Parameter function:			MODBUS address: 16148				

For P6-33= 0x0080, the error 4102 or error 4103 of Error Class 3 is triggered in the event of an overload (I^2T).

For P6-33= 0x0200, the error number 3201 or the error number 3202 is stored in the failure history storage area of the device.

Setting can only be modified if power stage is disabled.

Modified settings become active the next time the motor moves.

P6-41	Setting of special functions	Minimum value	0	Unit	Related control mode		
		Factory setting	0	–	P	V / Vz	T / Tz
		Maximum value	65535		MS	S	–

Parameter function: **MODBUS address: 1686**

Setting of special functions

Parameter value	Bit	Description	Function	
L XXXX[]	0	Fault reset method after isotropic limit trigger error	0	Fault reset manually after isotropic limit trigger error
			1	Fault reset automatically through reverse motion after isotropic limit trigger error
	1	Options of isotropic limit trigger error	0	Error and halt occur after isotropic limit is triggered
			1	No error or halt after isotropic limit is triggered
	2	Reserved	–	–
	3	Speed limit function options in profile torque	Speed limit function options in profile torque • Mode 1 (Bit 3 = 0, Bit 4 = 0): The speed is limited without increasing the negative torque when the torque is limited within the range of the positive and negative torque commands and an external force makes the speed greater than the speed limit. • Mode 2 (Bit 3 = 0, Bit 4 = 0): The speed is limited with increasing the negative torque when the torque is limited within the range of the positive and negative torque commands and an external force makes the speed greater than the speed limit. • Mode 3 (bit 3 = 0, bit 4 = 1): Unidirectional torque limit mode	
L XXX[]X	4			
	5	Reserved	–	–
	6	Reserved	–	–
	7	Reserved	–	–
L XX[]XX	8	Reserved	–	–
	9	Reserved	–	–
	10	Reserved	–	–
	11	Reserved	–	–
L X[]XXX	12	Reserved	–	–
	13	Reserved	–	–
	14	Reserved	–	–
	15	Reserved	–	–
L []XXXX	16	Reserved	–	–
	17	Reserved	–	–
	18	Reserved	–	–
	19	Reserved	–	–
H XXXX[]	20	Reserved	–	–
	21	Reserved	–	–
	22	Reserved	–	–
	23	Reserved	–	–
H XXX[]X	24	Reserved	–	–
	25	Reserved	–	–
	26	Reserved	–	–
	27	Reserved	–	–
H XX[]XX	28	Reserved	–	–
	29	Reserved	–	–
	30	Reserved	–	–
	31	Reserved	–	–

P6-41	Setting of special functions	Minimum value	0	Unit	Related control mode		
		Factory setting	0	–	P	V / Vz	T / Tz
		Maximum value	65535		MS	S	–

Parameter function: **MODBUS address: 1686**

Setting can only be modified if power stage is disabled.

Modified settings become active the next time the motor moves.

P6-42	Maximum motor velocity during enable of power stage output	Minimum value	0	Unit	Related control mode		
		Factory setting	100	usr_v	P	V / Vz	T / Tz
		Maximum value	500		MS	S	–

Parameter function: **MODBUS address: 1684**

Maximum motor velocity during enable of power stage output

This parameter defines the maximum motor velocity allowed by the system during enable of power stage output. If the system detects the motor velocity exceeding this parameter during power stage output enabling, the error 1B0F of Error Class 3 will be triggered.

This parameter limits uncontrolled motor behavior during enabling of power stage due to abnormal conditions.

Modified settings become active immediately.

P6-43	Maximum current load rate of the motor at standstill	Minimum value	866	Unit	Related control mode		
		Factory setting	1000	0.1%	P	V / Vz	T / Tz
		Maximum value	1000		MS	S	–

Parameter function: **MODBUS address: 1394**

Maximum current load rate of the motor at standstill

The maximum current load rate when the motor is at standstill is limited to prevent excessive stator single-phase current from causing additional heating of the motor and to protect the motor. This function also limits the torque output of the motor at standstill.

In increments of 0.1%.

Modified settings become active immediately.

P6-44	Maximum continuous current load rate when the motor is in operation	Minimum value	1000	Unit	Related control mode		
		Factory setting	1000	0.1%	P	V / Vz	T / Tz
		Maximum value	1150		MS	S	–

Parameter function: **MODBUS address: 1396**

Maximum continuous current load rate when the motor is in operation

In increments of 0.1%.

Modified settings become active immediately.

P6-45	Modbus data inversion by word	Minimum value	0	Unit	Related control mode		
		Factory setting	0	–	P	V / Vz	T / Tz
		Maximum value	1		MS	S	–

Parameter function: **MODBUS address: 5646**

Modbus data inversion by word function enabled or disabled

0 / Off: Modbus data inversion by word is disabled.

0 / On: Modbus data inversion by word is enabled.

NOTE: Only Modbus data inversion for 485 port supported, and Modbus protocol data inversion for USB port not supported.

V0201.10 and later versions support this function.

Modified settings become active immediately.

P6-47	Reset encoder error and clear multi-turn value	Minimum value	0	Unit	Related control mode		
		Factory setting	0	–	P	V / Vz	T / Tz
		Maximum value	2		MS	S	–

Parameter function: **MODBUS address: 21016**

Encoder reset command

0 / Invalid

1 / Encoder reset error

2 / Reset encoder error and clear multi-urn value

The value of P6-47 is automatically reset to 0 after reset.

V0201.14 and later versions support this function.

Modified settings become active immediately.

P6-48	ENCComErrThres	Minimum value	2	Unit	Related control mode		
		Factory setting	2	–	P	V / Vz	T / Tz
		Maximum value	128		MS	S	–

Parameter function: **MODBUS address: 21018**

Encoder continuous communication error alarm threshold

The system will only trigger an alarm when the number of consecutive errors reaches the set value.

P6-49	OverRangeSetup	Minimum value	0	Unit	Related control mode		
		Factory setting	0	–	P	V / Vz	T / Tz
		Maximum value	2		MS	S	–

Parameter function: **MODBUS address: 1722**

- When P6-49 = 0
  P6-41 = 0: Isotropic limit alarm, error reported, need to clear limit error before reversing
  P6-41 = 1: Isotropic limit alarm, reverse and automatically clear limit errors
  P6-41 = 2: Anisotropic limit alarm, error and halt occur
  P6-41 = 3: Anisotropic limit alarm, no error or halt
- When P6-49 = 1
  P6-41 = 3: When stopping at the limit point, no error is reported and the servo state remains unchanged.

Modified settings become active immediately.

P6-50	RTATU_ATTAUTOTUNNINGITEM	Minimum value	0	Unit	Related control mode		
		Factory setting	0	–	P	V / Vz	T / Tz
		Maximum value	1300		MS	S	–

Parameter function: **MODBUS address: 5402**

Tuning item content:

10: Offline tuning for all items

20: Offline inertia measurement

40: Offline jerk tuning

One-click self-tuning project selection method:

X	Thousands	Hundreds	Tens	Ones	Description
	(Offline/ Online)	(Direction)	(Project)	(Acceleration Intensity/Current Project)	
X	0	0	A	B/X	Forward/Reverse offline self-tuning selected project A
X	0	1	A	B/X	Forward offline self-tuning selected project A
X	0	2	A	B/X	Reverse offline self-tuning selected project A
X	1	X	X	X	Reserved

Value of A:

- 0: TUNE_NONE = 0
- 1: TUNE_ALL = 1, tune all projects
- 2: TUNE_INERTIA = 2, measure inertia
- 3: TUNE_FR = 3, automatically select FR based on inertia
- 4: TUNE_JERK = 4, tune jerk value based on system maximum acceleration and highest velocity

Value of B (The acceleration selected for this value only takes effect during tuning inertia):

- 0: Acceleration/Deceleration P4-02/P4-03 = 250000 usr_a
- 1: Acceleration/Deceleration P4-02/P4-03 = 200000 usr_a
- 2: Acceleration/Deceleration P4-02/P4-03 = 150000 usr_a
- 3: Acceleration/Deceleration P4-02/P4-03 = 100000 usr_a
- 4: Acceleration/Deceleration P4-02/P4-03 = 50000 usr_a
- ≥5: Acceleration/Deceleration P4-02/P4-03 = 25000 usr_a

Notes

1. After offline tuning is complete, the servo returns to the RDY state.
2. TUNE_JERK=4, during offline jerk tuning, the servo will perform four forward and reverse cycles at the speed set in P6-53 and the relative position set in P6-52, following the acceleration and deceleration values specified in P4-02 and P4-03.
3. When parameter P6-50 is written to 0, the current tuning process can be stopped.
4. During ATT auto-tuning, range protection is automatically enabled.
   - During forward/reverse operation, if the movement range exceeds 20% of the position value set in P6-52, error E1B12 is reported and the servo stops.
   - During single-direction operation, if a single movement range exceeds 20% of the position value set in P6-52, error E1B12 is reported and the servo stops.

Common values

P6-50 = 10 (decimal) → Offline fully automatic tuning with acceleration/deceleration time 250000 usr_a

P6-50 = 13 (decimal) → Offline fully automatic tuning with acceleration/deceleration time 100000 usr_a

P6-50 = 15 (decimal) → Offline fully automatic tuning with acceleration/deceleration time 25000 usr_a

P6-50 = 20 (decimal) → Offline tuning inertia

P6-50 = 30 (decimal) → Automatic system stiffness setting based on inertia

P6-50 = 40 (decimal) → Offline tuning jerk (requires setting maximum speed/acceleration/motion range)

Modified settings become active immediately.

P6-51	RTATU_ATTOPERATIONWORD	Minimum value	0	Unit	Related control mode		
		Factory setting	0	–	P	V / Vz	T / Tz
		Maximum value	5		MS	S	–

Parameter function:

MODBUS address: 5404

Value=2: Reset ATT algorithm parameters

Modified settings become active immediately.

P6-52	RTATU_ATTTUNNINGPOSRANGEUSR	Minimum value	1	Unit	Related control mode		
		Factory setting	131072	user_p	P	V / Vz	T / Tz
		Maximum value	2147483647		MS	S	–

Parameter function:

MODBUS address: 5406

Motion range settings

Modified settings become active immediately.

P6-53	RTATU_ATTTUNNINGROTVEL	Minimum value	1	Unit	Related control mode		
		Factory setting	300	usr_v	P	V / Vz	T / Tz
		Maximum value	13200		MS	S	–

Parameter function:

MODBUS address: 5408

Motion target velocity settings

Modified settings become active immediately.

P7 - User-defined monitoring parameters

P7-00	Scan cycle in internal programming mode	Minimum value	0	Unit	Related control mode		
		Factory setting	0	1 ms	–	–	–
		Maximum value	127		–	S	–

Parameter function: **MODBUS address: 24906**

Scan cycle in internal programming mode

Value = 0: Free scan cycle of the main loop.

Value > 0: Fixed scan cycle in ms.

Setting can only be modified if power stage is disabled.

Modified settings become active the next time the motor moves.

P7-01	Program version No. in internal programming mode	Minimum value	-2147483648	Unit	Related control mode		
		Factory setting	0	–	–	–	–
		Maximum value	2147483647		–	S	–

Parameter function: **MODBUS address: 24840**

Version No. of internal program currently stored on the drive.

Read-only parameters.

P7-02	Motion Sequence data set: HMI entry parameters	Minimum value	0	Unit	Related control mode		
		Factory setting	0	–	–	–	–
		Maximum value	31		MS	–	–

Parameter function: **MODBUS address: 11584**

The content of the Motion Sequence data set is edited via HMI

Modified settings become active immediately.

P7-03	Motion Sequence: Start condition for the start of a sequence via a signal input.	Minimum value	0	Unit	Related control mode		
		Factory setting	0	–	–	–	–
		Maximum value	3		MS	–	–

Parameter function: **MODBUS address: 11536**

Start condition for the start of a sequence via a signal input.

0 / Rising Edge: Rising edge

1 / Falling Edge: Falling edge

2 / 1-level: 1 level

3 / 0-level: 0 level

Modified settings become active the next time the motor moves.

P7-04	Motion Sequence: Selection of the data set number after the end of a sequence.	Minimum value	0	Unit	Related control mode		
		Factory setting	0	–	–	–	–
		Maximum value	1		MS	–	–

Parameter function: **MODBUS address: 11538**

0 / DataSetSelect:

1 / Automatic: Data set is set automatically

Setting can only be modified if power stage is disabled.

Modified settings become active immediately.

P7-05	Motion Sequence: Response to falling edge at signal input for 'Start Signal Data Set'.	Minimum value	0	Unit	Related control mode		
		Factory setting	0	–	–	–	–
		Maximum value	1		MS	–	–

Parameter function: **MODBUS address: 11544**

0 / No Reaction: No response

1 / Cancel Movement: Cancel active movement

Setting can only be modified if power stage is disabled.

Modified settings become active immediately.

P7-08	User-defined monitoring parameter address 0	Minimum value	0	Unit	Related control mode		
		Factory setting	0	–	P	V / Vz	T / Tz
		Maximum value	65535		MS	S	–

Parameter function: **MODBUS address: 7770**

User-defined monitoring parameter address 0

Modified settings become active immediately.

P7-09	User-defined monitoring parameter address 1	Minimum value	0	Unit	Related control mode		
		Factory setting	0	–	P	V / Vz	T / Tz
		Maximum value	65535		MS	S	–

Parameter function: **MODBUS address: 7772**

User-defined monitoring parameter address 1

Modified settings become active immediately.

P7-10	User-defined monitoring parameter address 2	Minimum value	0	Unit	Related control mode		
		Factory setting	0	–	P	V / Vz	T / Tz
		Maximum value	65535		MS	S	–

Parameter function: **MODBUS address: 7774**

User-defined monitoring parameter address 2

Modified settings become active immediately.

P7-11	User-defined monitoring parameter address 3	Minimum value	0	Unit	Related control mode		
		Factory setting	0	–	P	V / Vz	T / Tz
		Maximum value	65535		MS	S	–

Parameter function: **MODBUS address: 7776**

User-defined monitoring parameter address 3

Modified settings become active immediately.

P7-12	User-defined monitoring parameter address 4	Minimum value	0	Unit	Related control mode		
		Factory setting	0	–	P	V / Vz	T / Tz
		Maximum value	65535		MS	S	–

Parameter function: **MODBUS address: 7778**

User-defined monitoring parameter address 4

Modified settings become active immediately.

P7-13	User-defined monitoring parameter address 5	Minimum value	0	Unit	Related control mode		
		Factory setting	0	–	P	V / Vz	T / Tz
		Maximum value	65535		MS	S	–

Parameter function: MODBUS address: 7780

User-defined monitoring parameter address 5

Modified settings become active immediately.

P7-14	User-defined monitoring parameter address 6	Minimum value	0	Unit	Related control mode		
		Factory setting	0	–	P	V / Vz	T / Tz
		Maximum value	65535		MS	S	–

Parameter function: MODBUS address: 7782

User-defined monitoring parameter address 6

Modified settings become active immediately.

P7-15	User-defined monitoring parameter address 7	Minimum value	0	Unit	Related control mode		
		Factory setting	0	–	P	V / Vz	T / Tz
		Maximum value	65535		MS	S	–

Parameter function: MODBUS address: 7784

User-defined monitoring parameter address 7

Modified settings become active immediately.

P7-16	User-defined monitoring parameter address 8	Minimum value	0	Unit	Related control mode		
		Factory setting	0	–	P	V / Vz	T / Tz
		Maximum value	65535		MS	S	–

Parameter function: MODBUS address: 7786

User-defined monitoring parameter address 8

Modified settings become active immediately.

P7-17	User-defined monitoring parameter address 9	Minimum value	0	Unit	Related control mode		
		Factory setting	0	–	P	V / Vz	T / Tz
		Maximum value	65535		MS	S	–

Parameter function: MODBUS address: 7788

User-defined monitoring parameter address 9

Modified settings become active immediately.

Other Parameters

–	*_PosRegStatus*	Minimum value	0	Unit	Related control mode		
		Factory setting	0	–	P	V / Vz	T / Tz
		Maximum value	65535		MS	S	–

Parameter function:	MODBUS address: 2818

Signal status:

0: Comparison condition not met

1: Comparison condition met

Byte Bit Definitions:

Bit 0: Status of Position Register Channel 1

Bit 1: Status of Position Register Channel 2

Bit 2: Status of Position Register Channel 3

Bit 3: Status of Position Register Channel 4

–	*PosReg1Start*	Minimum value	0	Unit	Related control mode		
		Factory setting	0	–	P	V / Vz	T / Tz
		Maximum value	3		MS	S	–

Parameter function:	MODBUS address: 2820

0 / Off (Hold Last State): Location register channel 1 is off, and the status bit holds the last state.

1 / On: Location register channel 1 is on.

2 / Off (Set State 0): Location register channel 1 is off, and the status bit is set to 0.

3 / Off (Set State 1): Location register channel 1 is off, and the status bit is set to 1.

Modified settings become active immediately.

–	*PosReg2Start*	Minimum value	0	Unit	Related control mode		
		Factory setting	0	–	P	V / Vz	T / Tz
		Maximum value	3		MS	S	–

Parameter function:	MODBUS address: 2822

0 / Off (Hold Last State): Location register channel 2 is off, and the status bit holds the last state.

1 / On: Location register channel 2 is on.

2 / Off (Set State 0): Location register channel 2 is off, and the status bit is set to 0.

3 / Off (Set State 1): Location register channel 2 is off, and the status bit is set to 1.

Modified settings become active immediately.

–	*PosReg3Start*	Minimum value	0	Unit	Related control mode		
		Factory setting	0	–	P	V / Vz	T / Tz
		Maximum value	3		MS	S	–

Parameter function: **MODBUS address: 2840**

0 / Off (Hold Last State): Location register channel 3 is off, and the status bit holds the last state.

1 / On: Location register channel 3 is on.

2 / Off (Set State 0): Location register channel 3 is off, and the status bit is set to 0.

3 / Off (Set State 1): Location register channel 3 is off, and the status bit is set to 1.

Modified settings become active immediately.

–	*PosReg4Start*	Minimum value	0	Unit	Related control mode		
		Factory setting	0	–	P	V / Vz	T / Tz
		Maximum value	3		MS	S	–

Parameter function: **MODBUS address: 2842**

0 / Off (Hold Last State): Location register channel 4 is off, and the status bit holds the last state.

1 / On: Location register channel 4 is on.

2 / Off (Set State 0): Location register channel 4 is off, and the status bit is set to 0.

3 / Off (Set State 1): Location register channel 4 is off, and the status bit is set to 1.

Modified settings become active immediately.

–	*_CPU_load*	Minimum value	-32768	Unit	Related control mode		
		Factory setting	-32768	%	P	V / Vz	T / Tz
		Maximum value	32767		MS	S	–

Parameter function: **MODBUS address: 7254**

CPU load

–	*EncPosiLow*	Minimum value	-2147483648	Unit	Related control mode		
		Factory setting	0	–	P	V / Vz	T / Tz
		Maximum value	2147483647		MS	S	–

Parameter function: **MODBUS address: 21022**

Identify the lower 32 bits of the encoder position

–	*EncPosiHigh*	Minimum value	-2147483648	Unit	Related control mode		
		Factory setting	0	–	P	V / Vz	T / Tz
		Maximum value	2147483647		MS	S	–

Parameter function: **MODBUS address: 21024**

Identify the higher 32 bits of the encoder position

–	*EncPosiSingleTurn*	Minimum value	-21474836-48	Unit	Related control mode		
		Factory setting	0	–	P	V / Vz	T / Tz
		Maximum value	214748364-7		MS	S	–
Parameter function:			MODBUS address: 21026				
Identify encoder single-turn value							

–	*EncPosiMultiTurn*	Minimum value	0	Unit	Related control mode		
		Factory setting	0	–	P	V / Vz	T / Tz
		Maximum value	65535		MS	S	–
Parameter function:			MODBUS address: 21028				
Identify encoder multi-turn value							

Pu User-defined internal programming parameters

Pu-00	User-defined parameter 0 in internal programming mode	Minimum value	-2147483648	Unit	Related control mode		
		Factory setting	0	–	–	–	–
		Maximum value	2147483647		–	S	–
Parameter function:			MODBUS address: 24858				
User-defined parameter 0 in internal programming mode **Modified settings become active immediately.**							

Pu-01	User-defined parameter 1 in internal programming mode	Minimum value	-2147483648	Unit	Related control mode		
		Factory setting	0	–	–	–	–
		Maximum value	2147483647		–	S	–
Parameter function:			MODBUS address: 24860				
User-defined parameter 1 in internal programming mode **Modified settings become active immediately.**							

Pu-02	User-defined parameter 2 in internal programming mode	Minimum value	-2147483648	Unit	Related control mode		
		Factory setting	0	–	–	–	–
		Maximum value	2147483647		–	S	–
Parameter function:			MODBUS address: 24862				
User-defined parameter 2 in internal programming mode **Modified settings become active immediately.**							

Pu-03	User-defined parameter 3 in internal programming mode	Minimum value	-2147483648	Unit	Related control mode		
		Factory setting	0	–	–	–	–
		Maximum value	2147483647		–	S	–
Parameter function:			MODBUS address: 24864				
User-defined parameter 3 in internal programming mode **Modified settings become active immediately.**							

Pu-04	User-defined parameter 4 in internal programming mode	Minimum value	-2147483648	Unit	Related control mode		
		Factory setting	0	–	–	–	–
		Maximum value	2147483647		–	S	–

Parameter function: **MODBUS address: 24866**

User-defined parameter 4 in internal programming mode

Modified settings become active immediately.

Pu-05	User-defined parameter 5 in internal programming mode	Minimum value	-2147483648	Unit	Related control mode		
		Factory setting	0	–	–	–	–
		Maximum value	2147483647		–	S	–

Parameter function: **MODBUS address: 24868**

User-defined parameter 5 in internal programming mode

Modified settings become active immediately.

Pu-06	User-defined parameter 6 in internal programming mode	Minimum value	-2147483648	Unit	Related control mode		
		Factory setting	0	–	–	–	–
		Maximum value	2147483647		–	S	–

Parameter function: **MODBUS address: 24870**

User-defined parameter 6 in internal programming mode

Modified settings become active immediately.

Pu-07	User-defined parameter 7 in internal programming mode	Minimum value	-2147483648	Unit	Related control mode		
		Factory setting	0	–	–	–	–
		Maximum value	2147483647		–	S	–

Parameter function: **MODBUS address: 24872**

User-defined parameter 7 in internal programming mode

Modified settings become active immediately.

Pu-08	User-defined parameter 8 in internal programming mode	Minimum value	-2147483648	Unit	Related control mode		
		Factory setting	0	–	–	–	–
		Maximum value	2147483647		–	S	–

Parameter function: **MODBUS address: 24874**

User-defined parameter 8 in internal programming mode

Modified settings become active immediately.

Pu-09	User-defined parameter 9 in internal programming mode	Minimum value	-2147483648	Unit	Related control mode		
		Factory setting	0	–	–	–	–
		Maximum value	2147483647		–	S	–

Parameter function: **MODBUS address: 24876**

User-defined parameter 9 in internal programming mode

Modified settings become active immediately.

Pu-10	User-defined parameter 10 in internal programming mode	Minimum value	-2147483648	Unit	Related control mode		
		Factory setting	0	–	–	–	–
		Maximum value	2147483647		–	S	–

Parameter function: **MODBUS address: 24878**

User-defined parameter 10 in internal programming mode

Modified settings become active immediately.

Pu-11	User-defined parameter 11 in internal programming mode	Minimum value	-2147483648	Unit	Related control mode		
		Factory setting	0	–	–	–	–
		Maximum value	2147483647		–	S	–

Parameter function: **MODBUS address: 24880**

User-defined parameter 11 in internal programming mode

Modified settings become active immediately.

Pu-12	User-defined parameter 12 in internal programming mode	Minimum value	-2147483648	Unit	Related control mode		
		Factory setting	0	–	–	–	–
		Maximum value	2147483647		–	S	–

Parameter function: **MODBUS address: 24882**

User-defined parameter 12 in internal programming mode

Modified settings become active immediately.

Pu-13	User-defined parameter 13 in internal programming mode	Minimum value	-2147483648	Unit	Related control mode		
		Factory setting	0	–	–	–	–
		Maximum value	2147483647		–	S	–

Parameter function: **MODBUS address: 24884**

User-defined parameter 13 in internal programming mode

Modified settings become active immediately.

Pu-14	User-defined parameter 14 in internal programming mode	Minimum value	-2147483648	Unit	Related control mode		
		Factory setting	0	–	–	–	–
		Maximum value	2147483647		–	S	–

Parameter function: **MODBUS address: 24886**

User-defined parameter 14 in internal programming mode

Modified settings become active immediately.

Pu-15	User-defined parameter 15 in internal programming mode	Minimum value	-2147483648	Unit	Related control mode		
		Factory setting	0	–	–	–	–
		Maximum value	2147483647		–	S	–

Parameter function: **MODBUS address: 24888**

User-defined parameter 15 in internal programming mode

Modified settings become active immediately.

Pu-16	User-defined parameter 16 in internal programming mode	Minimum value	-2147483648	Unit	Related control mode		
		Factory setting	0	–	–	–	–
		Maximum value	2147483647		–	S	–

Parameter function: **MODBUS address: 24890**

User-defined parameter 16 in internal programming mode

Modified settings become active immediately.

Pu-17	User-defined parameter 17 in internal programming mode	Minimum value	-2147483648	Unit	Related control mode		
		Factory setting	0	–	–	–	–
		Maximum value	2147483647		–	S	–

Parameter function: **MODBUS address: 24892**

User-defined parameter 17 in internal programming mode

Modified settings become active immediately.

Pu-18	User-defined parameter 18 in internal programming mode	Minimum value	-2147483648	Unit	Related control mode		
		Factory setting	0	–	–	–	–
		Maximum value	2147483647		–	S	–

Parameter function: **MODBUS address: 24894**

User-defined parameter 18 in internal programming mode

Modified settings become active immediately.

Pu-19	User-defined parameter 19 in internal programming mode	Minimum value	-2147483648	Unit	Related control mode		
		Factory setting	0	–	–	–	–
		Maximum value	2147483647		–	S	–

Parameter function: **MODBUS address: 24896**

User-defined parameter 19 in internal programming mode

Modified settings become active immediately.

Pu-20	User-defined parameter 20 in internal programming mode	Minimum value	-2147483648	Unit	Related control mode		
		Factory setting	0	–	–	–	–
		Maximum value	2147483647		–	S	–

Parameter function: **MODBUS address: 24898**

User-defined parameter 20 in internal programming mode

Modified settings become active immediately.

Pu-21	User-defined parameter 21 in internal programming mode	Minimum value	-2147483648	Unit	Related control mode		
		Factory setting	0	–	–	–	–
		Maximum value	2147483647		–	S	–

Parameter function: **MODBUS address: 24900**

User-defined parameter 21 in internal programming mode

Modified settings become active immediately.

Pu-22	User-defined parameter 22 in internal programming mode	Minimum value	-2147483648	Unit	Related control mode		
		Factory setting	0	–	–	–	–
		Maximum value	2147483647		–	S	–

Parameter function: **MODBUS address: 24902**

User-defined parameter 22 in internal programming mode

Modified settings become active immediately.

Pu-23	User-defined parameter 23 in internal programming mode	Minimum value	-2147483648	Unit	Related control mode		
		Factory setting	0	–	–	–	–
		Maximum value	2147483647		–	S	–

Parameter function: **MODBUS address: 24904**

User-defined parameter 23 in internal programming mode

Modified settings become active immediately.

Internal motion task set

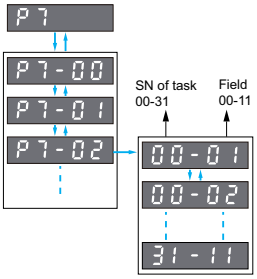

Modbus address for LXM18 Motion Sequence 32 task

–	Task Type Field-00	Variable A Field-01	Variable B Field-02	Variable C Field-03	Variable D Field-04	Switching Method Field-05	Next task set Field-06	Switching condition 1 Field-07	Setting value of switching condition 1 Field-08	Logical operator of switching condition Field-09	Switching condition 2 Field-10	Setting value of switching condition 2 Field-11
SN of task set 0	21248 00-00	21250 00-01	21252 00-02	21254 00-03	21256 00-04	21258 00-05	21260 00-06	21262 00-07	21264 00-08	21266 00-09	21268 00-10	21270 00-11
SN of task set 1	21272 01-00	21274 01-01	21276 01-02	21278 01-03	21280 01-04	21282 01-05	21284 01-06	21286 01-07	21288 01-08	21290 01-09	21292 01-10	21294 01-11
SN of task set 2	21296 02-00	21298 02-01	21300 02-02	21302 02-03	21304 02-04	21306 02-05	21308 02-06	21310 02-07	21312 02-08	21314 02-09	21316 02-10	21318 02-11
SN of task set 3	21320 03-00	21322 03-01	21324 03-02	21326 03-03	21328 03-04	21330 03-05	21332 03-06	21334 03-07	21336 03-08	21338 03-09	21340 03-10	21342 03-11
SN of task set 4	21344 04-00	21346 04-01	21348 04-02	21350 04-03	21352 04-04	21354 04-05	21356 04-06	21358 04-07	21360 04-08	21362 04-09	21364 04-10	21366 04-11
SN of task set 5	21368 05-00	21370 05-01	21372 05-02	21374 05-03	21376 05-04	21378 05-05	21380 05-06	21382 05-07	21384 05-08	21386 05-09	21388 05-10	21390 05-11
SN of task set 6	21392 06-00	21394 06-01	21396 06-02	21398 06-03	21400 06-04	21402 06-05	21404 06-06	21406 06-07	21408 06-08	21410 06-09	21412 06-10	21414 06-11
SN of task set 7	21416 07-00	21418 07-01	21420 07-02	21422 07-03	21424 07-04	21426 07-05	21428 07-06	21430 07-07	21432 07-08	21434 07-09	21436 07-10	21438 07-11
SN of task set 8	21440 08-00	21442 08-01	21444 08-02	21446 08-03	21448 08-04	21450 08-05	21452 08-06	21454 08-07	21456 08-08	21458 08-09	21460 08-10	21462 08-11
SN of task set 9	21464 09-00	21466 09-01	21468 09-02	21470 09-03	21472 09-04	21474 09-05	21476 09-06	21478 09-07	21480 09-08	21482 09-09	21484 09-10	21486 09-11

Modbus address for LXM18 Motion Sequence 32 task (Continued)

–	Task Type Field-00	Variable A Field-01	Variable B Field-02	Variable C Field-03	Variable D Field-04	Switching Method Field-05	Next task set Field-06	Switching condition 1 Field-07	Setting value of switching condition 1 Field-08	Logical operator of switching condition Field-09	Switching condition 2 Field-10	Setting value of switching condition 2 Field-11
SN of task set 10	21488 10-00	21490 10-01	21492 10-02	21494 10-03	21496 10-04	21498 10-05	21500 10-06	21502 10-07	21504 10-08	21506 10-09	21508 10-10	21510 10-11
SN of task set 11	21512 11-00	21514 11-01	21516 11-02	21518 11-03	21520 11-04	21522 11-05	21524 11-06	21526 11-07	21528 11-08	21530 11-09	21532 11-10	21534 11-11
SN of task set 12	21536 12-00	21538 12-01	21540 12-02	21542 12-03	21544 12-04	21546 12-05	21548 12-06	21550 12-07	21552 12-08	21554 12-09	21556 12-10	21558 12-11
SN of task set 13	21560 13-00	21562 13-01	21564 13-02	21566 13-03	21568 13-04	21570 13-05	21572 13-06	21574 13-07	21576 13-08	21578 13-09	21580 13-10	21582 13-11
SN of task set 14	21584 14-00	21586 14-01	21588 14-02	21590 14-03	21592 14-04	21594 14-05	21596 14-06	21598 14-07	21600 14-08	21602 14-09	21604 14-10	21606 14-11
SN of task set 15	21608 15-00	21610 15-01	21612 15-02	21614 15-03	21616 15-04	21618 15-05	21620 15-06	21622 15-07	21624 15-08	21626 15-09	21628 15-10	21630 15-11
SN of task set 16	21632 16-00	21634 16-01	21636 16-02	21638 16-03	21640 16-04	21642 16-05	21644 16-06	21646 16-07	21648 16-08	21650 16-09	21652 16-10	21654 16-11
SN of task set 17	21656 17-00	21658 17-01	21660 17-02	21662 17-03	21664 17-04	21666 17-05	21668 17-06	21670 17-07	21672 17-08	21674 17-09	21676 17-10	21678 17-11
SN of task set 18	21680 18-00	21682 18-01	21684 18-02	21686 18-03	21688 18-04	21690 18-05	21692 18-06	21694 18-07	21696 18-08	21698 18-09	21700 18-10	21702 18-11
SN of task set 19	21704 19-00	21706 19-01	21708 19-02	21710 19-03	21712 19-04	21714 19-05	21716 19-06	21718 19-07	21720 19-08	21722 19-09	21724 19-10	21726 19-11
SN of task set 20	21728 20-00	21730 20-01	21732 20-02	21734 20-03	21736 20-04	21738 20-05	21740 20-06	21742 20-07	21744 20-08	21746 20-09	21748 20-10	21750 20-11
SN of task set 21	21752 21-00	21754 21-01	21756 21-02	21758 21-03	21760 21-04	21762 21-05	21764 21-06	21766 21-07	21768 21-08	21770 21-09	21772 21-10	21774 21-11
SN of task set 22	21776 22-00	21778 22-01	21780 22-02	21782 22-03	21784 22-04	21786 22-05	21788 22-06	21790 22-07	21792 22-08	21794 22-09	21796 22-10	21798 22-11

Modbus address for LXM18 Motion Sequence 32 task (Continued)

–	Task Type Field-00	Variable A Field-01	Variable B Field-02	Variable C Field-03	Variable D Field-04	Switching Method Field-05	Next task set Field-06	Switching condition 1 Field-07	Setting value of switching condition 1 Field-08	Logical operator of switching condition Field-09	Switching condition 2 Field-10	Setting value of switching condition 2 Field-11
SN of task set 23	21800 23-00	21802 23-01	21804 23-02	21806 23-03	21808 23-04	21810 23-05	21812 23-06	21814 23-07	21816 23-08	21818 23-09	21820 23-10	21822 23-11
SN of task set 24	21824 24-00	21826 24-01	21828 24-02	21830 24-03	21832 24-04	21834 24-05	21836 24-06	21838 24-07	21840 24-08	21842 24-09	21844 24-10	21846 24-11
SN of task set 25	21848 25-00	21850 25-01	21852 25-02	21854 25-03	21856 25-04	21858 25-05	21860 25-06	21862 25-07	21864 25-08	21866 25-09	21868 25-10	21870 25-11
SN of task set 26	21872 26-00	21874 26-01	21876 26-02	21878 26-03	21880 26-04	21882 26-05	21884 26-06	21886 26-07	21888 26-08	21890 26-09	21892 26-10	21894 26-11
SN of task set 27	21896 27-00	21898 27-01	21900 27-02	21902 27-03	21904 27-04	21906 27-05	21908 27-06	21910 27-07	21912 27-08	21914 27-09	21916 27-10	21918 27-11
SN of task set 28	21920 28-00	21922 28-01	21924 28-02	21926 28-03	21928 28-04	21930 28-05	21932 28-06	21934 28-07	21936 28-08	21938 28-09	21940 28-10	21942 28-11
SN of task set 29	21944 29-00	21946 29-01	21948 29-02	21950 29-03	21952 29-04	21954 29-05	21956 29-06	21958 29-07	21960 29-08	21962 29-09	21964 29-10	21966 29-11
SN of task set 30	21968 30-00	21970 30-01	21972 30-02	21974 30-03	21976 30-04	21978 30-05	21980 30-06	21982 30-07	21984 30-08	21986 30-09	21988 30-10	21990 30-11
SN of task set 31	21992 31-00	21994 31-01	21996 31-02	21998 31-03	22000 31-04	22002 31-05	22004 31-06	22006 31-07	22008 31-08	22010 31-09	22012 31-10	22014 31-11

Field-00	Motion Sequence task set: task type	Minimum value	0	Unit	Related control mode		
		Factory setting	0	–	–	–	–
		Maximum value	9		MS	–	–

Parameter function:

MODBUS address: 21248

0 / None No task.

1 / Absolute movement: absolute positioning movement.

2 / Move Additive: incremental positioning movement.

3 / Reference Movement: movement to find reference point.

4 / Position Setting: setting position of reference point.

5 / Repeat: repeating specific task set.

6 / Move Additive: relative positioning movement.

7 / Move Velocity: velocity motion at a particular speed.

8 / Electric Gear: Electronic gear mode.

9 / Write Parameter: writing parameters directly to a specific address.

Modified settings become active immediately.

Field-01	Motion Sequence task set: Variable A	Minimum value	-2147483648	Unit	Related control mode		
		Factory setting	0	usr_a	–	–	–
		Maximum value	2147483647		MS	–	–

Parameter function:

MODBUS address: see address table

Variable A

Modified settings become active immediately.

Field-02	Motion Sequence task set: Variable B	Minimum value	-2147483648	Unit	Related control mode		
		Factory setting	0	usr_v	–	–	–
		Maximum value	2147483647		MS	–	–

Parameter function:

MODBUS address: see address table

Variable B

Modified settings become active immediately.

Field-03	Motion Sequence task group: Variable C	Minimum value	-2147483648	Unit	Related control mode		
		Factory setting	0	usr_p	–	–	–
		Maximum value	2147483647		MS	–	–

Parameter function:

MODBUS address: see address table

Variable C

Modified settings become active immediately.

Field-04	Motion Sequence task group: Variable D	Minimum value	-2147483648	Unit	Related control mode		
		Factory setting	0	usr_a	–	–	–
		Maximum value	2147483647		MS	–	–

Parameter function:

MODBUS address: see address table

Variable D

Modified settings become active immediately.

Field-05	Motion Sequence task group: Switching method	Minimum value	0	Unit	Related control mode		
		Factory setting	0	–	–	–	–
		Maximum value	4		MS	–	–

Parameter function:

MODBUS address: see address table

Task set switching approach

0 / No Transition

1 / Abort And Go Next

2 / Buffer And Start Next

3 / Blending Previous

4 / Blending Next

Modified settings become active immediately.

Caption of Motion Sequence switching approach:

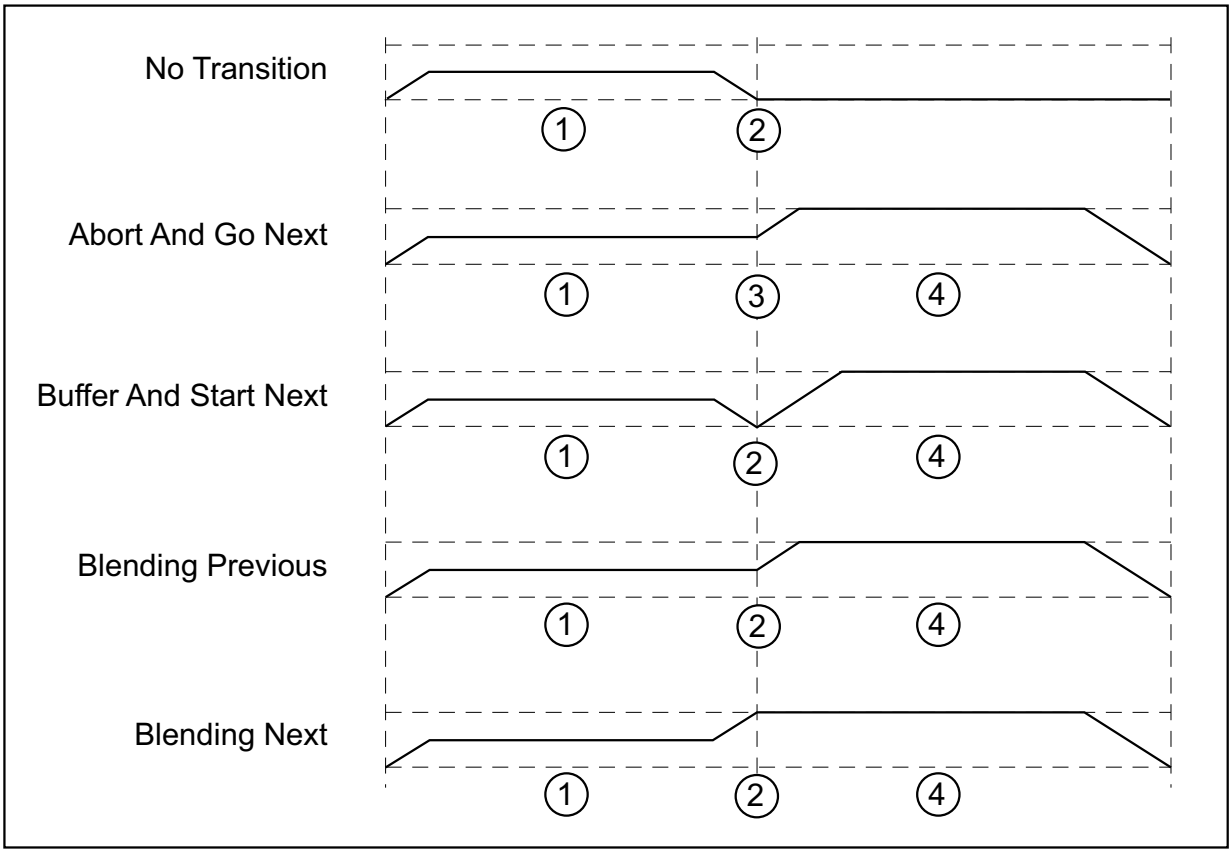

1. The first data set.
2. The target location of the first data set is reached.
3. When the transition condition is met, the first data set is terminated and the next data set is started.
4. The next data set.

Field-06	Motion Sequence task set: Next task set	Minimum value	0	Unit	Related control mode		
		Factory setting	0	–	–	–	–
		Maximum value	31		MS	–	–

Parameter function:

MODBUS address: see address table

Task sets that are subsequently started in continuous start mode

Modified settings become active immediately.

Field-07	Motion Sequence task set: Switching condition 1	Minimum value	0	Unit	Related control mode		
		Factory setting	0	–	–	–	–
		Maximum value	3		MS	–	–

Parameter function: **MODBUS address: see address table**

Task set switching condition 1

0 / Continue Without Condition: There is no switching condition, and the subsequent task set will be started directly.

1 / Wait Time: The switching condition is the wait time.

2 / Start Request Edge: The switching condition is to trigger the pulse edge of the signal input.

3 / Start Request Level: The switching condition is to trigger the level of the signal input.

Modified settings become active immediately.

Field-08	Motion Sequence task set: Set value of switching condition 1	Minimum value	0	Unit	Related control mode		
		Factory setting	0	–	–	–	–
		Maximum value	30000		MS	–	–

Parameter function: **MODBUS address: see address table**

Setting value of switching condition 1

Parameter values depend on what is selected in task set switching condition 1:

0 / Continue Without Condition: no value

1 / Wait Time: wait time in ms

- • Parameter value: 0…30000

2 / Start Request Edge: The switching condition is to trigger the pulse edge of the signal input.

- Parameter value 0: rising edge
- Parameter value 1: falling edge
- Parameter value 4: rising edge or falling edge

3 / Start Request Level: The switching condition is to trigger the level of the signal input.

- Parameter value 2: level 1
- Parameter value 3: level 0

Modified settings become active immediately.

Field-09	Motion Sequence task set: Logical operators of switching condition	Minimum value	0	Unit	Related control mode		
		Factory setting	0	–	–	–	–
		Maximum value	2		MS	–	–

Parameter function: **MODBUS address: see address table**

Logical operator of switching condition for task set

0 / None

1 / Logical AND

2 / Logical OR

Modified settings become active immediately.

Field-10	Motion Sequence task set: Switching condition 2	Minimum value	0	Unit	Related control mode		
		Factory setting	0	–	–	–	–
		Maximum value	3		MS	–	–

Parameter function: **MODBUS address: see address table**

Task set switching condition 2

0 / Continue Without Condition: There is no switching condition, and the subsequent data set will be started directly.

2 / Start Request Edge: The switching condition is to trigger the pulse edge of the signal input.

3 / Start Request Level: The switching condition is to trigger the level of the signal input.

Modified settings become active immediately.

Field-11	Motion Sequence task set: Set value of switching condition 2	Minimum value	0	Unit	Related control mode		
		Factory setting	0	–	–	–	–
		Maximum value	4		MS	–	–

Parameter function:

MODBUS address: see address table

Setting value of switching condition 2

Parameter values depend on what is selected in task set switching condition 2:

0 / Continue Without Condition: no value

2 / Start Request Edge: The switching condition is to trigger the pulse edge of the signal input.

- Parameter value 0: rising edge
- Parameter value 1: falling edge
- Parameter value 4: rising edge or falling edge

3 / Start Request Level: The switching condition is to trigger the level of the signal input.

- Parameter value 2: level 1
- Parameter value 3: level 0

Modified settings become active immediately.

Communication

RS-485 communication hardware interface

Lexium18 servo drives have RS-485 serial communication function to control the servo system, read and write drive parameters, and monitor the status of the servo system.

The RS-485 interface of this device can also be used to connect a PC withdebugging software Lexium DTM Library PC for debugging. The PC needs to be connected to this device through a bidirectional USB / RS-485 converter connection.

NOTICE
EQUIPMENT DAMAGE Please do not directly connect the RS-485 interface of this device to the Ethernet interface of PC, otherwise it may damage the Ethernet interface of PC. **Failure to follow these instructions can result in equipment damage.**

RS-485 hardware interface

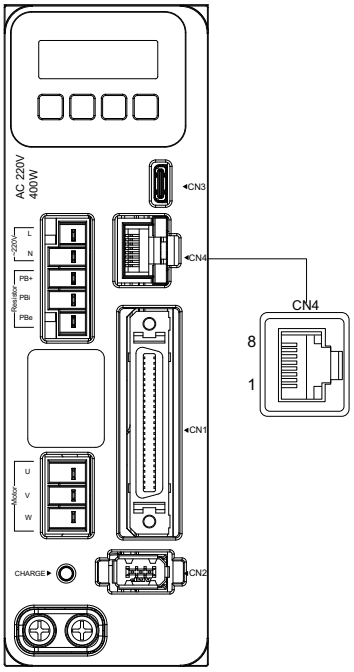

The pin numbers of RS-485 hardware interface are defined as follows:

Pin No.	Signal	Function
1	–	Reserved
2	–	Reserved
3	–	Reserved
4	MOD_D+	Drive data transmission differential signal positive
5	MOD_D-	Drive data transmission differential signal negative
6	–	Reserved
7	MOD_5V	5Vdc output
8	MOD_GND	Signal ground

⚠WARNING

UNINTENDED MOVEMENT

Do not connect any wiring to connection points defined as reservation, unused connection points, or connection points marked as "No Connection (N.C.)".

Failure to follow these instructions can result in death, serious injury, or equipment damage.

RS-485 communication parameter definition

When using RS-485 communication, it is necessary to first use drive parameter P6-04 to set the slave station number of drive, P6-05 to set the communication baud rate, and P6-06 to set the communication data format.

P6-04	Modbus address	Minimum value	1	Unit	Related control mode		
		Factory setting	1	–	P	V / Vz	T / Tz
		Maximum value	247		MS	S	–

Parameter function: **MODBUS address: 5640**

Modbus address

The value set via this parameter is the MODBUS address of this device. When adopting RS-485 communication, a group of servo drives on the same network must be set with a unique address. If the address is repeatedly set, normal communication will not be possible.

Modified settings become active the next time the product is powered on.

P6-05	MODBUS communication baud rate	Minimum value	9600	Unit	Related control mode		
		Factory setting	19200	bps	P	V / Vz	T / Tz
		Maximum value	38400		MS	S	–

Parameter function: **MODBUS address: 5638**

MODBUS communication baud rate

9600 / 9600 Baud / 19..2: 19200 Baud

19200 / 19200 Baud / 19..2: 19200 Baud

38400 / 38400 Baud / 19..2: 19200 Baud

The value set via this parameter is the MODBUS communication baud rate of this device. When adopting RS-485 communication, the length of the communication cable is inversely proportional to the communication baud rate.

Modified settings become active the next time the product is powered on.

P6-06	MODBUS communication data format	Minimum value	1	Unit	Related control mode		
		Factory setting	2	–	P	V / Vz	T / Tz
		Maximum value	4		MS	S	–

Parameter function: **MODBUS address: 5642**

MODBUS communication data format

1/8, N, 1:8 bits, no check, 1 stop bit

2/8, N, 1:8 bits, even parity check, 1 stop bit

3/8, N, 1:8 bits, odd parity check, 1 stop bit

4/8, N, 2:8 bits, no check, 2 stop bits

The value set via this parameter is the MODBUS communication data format of this device.

Modified settings become active the next time the product is powered on.

RS-485 communication parameter setting

MODBUS communication protocol

There are two modes of MODBUS communication, namely ASCII mode and RTU mode.

Lexium18 series drives only support MODBUS RTU communication mode.

The communication frame composition structure of a MODBUS RTU is as follows:

Slave station address	Function code	Data	CRC verification
1 byte	1 byte	n bytes	2 bytes

- **Slave station address:**

  For the master station to locate a unique slave station on the network.
- **Function code:**

  Defined the actions that the slave station needs to perform.
- **Data:**

  Contained the data required to perform related actions.
- **CRC verification:**

  For checking the integrity of communication data.

Although in the description of the function code definition, the width of the data object is of byte or word type, the data exchange of this servo drive uses 32-bit double word (DWord) with the high bit first, such as:

If the transmission value is 1500 (0x05DC), the content filled in the data area is 0x 00 00 05 DC.

MODBUS function code

The function of each MODBUS frame is defined by a function code (FC) of one byte.

The following table lists the MODBUS function codes supported by Lexium18 series servo drive:

Function code (FC)	Function description
3 (FC 0x03)	Read multiple registers
16 (FC 0x10)	Write multiple registers
23 (FC 0x17)	Read / write multiple registers

FC 3 (0x03) - read multiple registers

Communication frame description:

Command frame sent	Function description	Data width
	Slave station address	1 byte
	Function code = 3 (0x03)	1 byte
	Target starting address of read data	2 bytes (H, L)
	Target address width of read data (count in Word)	2 bytes (H, L)
	CRC 16 check code	2 bytes (H, L)

Read success response frame	Function description	Data width
	Slave station address	1 byte
	Success function code = 3 (0x03)	1 byte
	Successfully read data quantity (count in byte)	1 byte
	Read data content	n * (2 bytes (H, L))
	CRC 16 check code	2 bytes (H, L)

Read failure response frame	Function description	Data width
	Slave station address	1 byte
	Failure function code = 3 (0x03) + 128 (0x80) = 131 (0x83)	1 byte
	Exception code: 0x01 = illegal function 0x02 = illegal target address 0x03 = illegal value 0x04 = slave station error	1 byte
	CRC 16 check code	2 bytes (H, L)

Example of reading multiple registers FC 03 (0x03):

- • Read the data in parameter Pu-00 of the servo drive with slave station address of 2 (0x02).
- • The parameter starting address of Pu-00 is 24858 (0x611A), and the data in Pu-00 is 1500 (0x05DC), with a data width of 1 double word (DWord).

Command frame sent	**Function description**	**Data width**	**Data content**
	Slave station address	1 byte	0x02
	Function number	1 byte	0x03
	Target starting address of read data	1 byte	0x61
		1 byte	0x1A
	Target address width of read data (count in Word)	1 byte	0x00
		1 byte	0x02
	CRC 16 check code	1 byte	0xFA
		1 byte	0x03

Read success response frame	**Function description**	**Data width**	**Data content**
	Slave station address	1 byte	0x02
	Success function code	1 byte	0x03
	Successfully read data quantity (count in byte)	1 byte	0x04
	Data content of the target starting address (1 Word)	1 byte	0x00
		1 byte	0x00
	Data content of the second group address (1 Word)	1 byte	0x05
		1 byte	0xDC
	CRC 16 check code	1 byte	0xCB
		1 byte	0xFA

Read failure response frame	**Function description**	**Data width**	**Data content**
	Slave station address	1 byte	0x02
	Failure function code	1 byte	0x83
	Exception code	1 byte	0x04
	CRC 16 check code	1 byte	0xB0
		1 byte	0xF3

FC 16 (0x10) - write multiple registers

Communication frame description:

Command frame sent	Function description	Data width
	Slave station address	1 byte
	Function code = 16 (0x10)	1 byte
	Target starting address of written data	2 bytes (H, L)
	Target address length of written data (count in Word)	2 bytes (H, L)
	Written data quantity (count in byte)	1 byte
	Written data content	n * (2 bytes (H, L))
	CRC 16 check code	2 bytes (H, L)

Write successful response frame	Function description	Data width
	Slave station address	1 byte
	Success function code = 16 (0x10)	1 byte
	Successful written starting address	2 bytes (H, L)
	Successful written address width	2 bytes (H, L)
	CRC 16 check code	2 bytes (H, L)

Write failed response frame	Function description	Data width
	Slave station address	1 byte
	Failure function code = 16 (0x10) + 128 (0x80) = 144 (0x90)	1 byte
	Exception code: 0x01 = illegal function 0x02 = illegal target address 0x03 = illegal value 0x04 = slave station error	1 byte
	CRC 16 check code	2 bytes (H, L)

Example of writing multiple registers FC 16 (0x10):

- • Write the data 1500 (0x05DC) to parameter Pu-00 of servo drive with slave station address of 2 (0x02).
- • The parameter starting address of Pu-00 is 24858 (0x611A), with a data width of 1 double word (DWord).

Command frame sent	Function description	Data width	Data content
	Slave station address	1 byte	0x02
	Function code	1 byte	0x10
	Target starting address of written data	1 byte	0x61
		1 byte	0x1A
	Target address length of written data (count in Word)	1 byte	0x00
		1 byte	0x02
	Written data quantity (count in byte)	1 byte	0x04
	Written data content of the first group	1 byte	0x00
		1 byte	0x00
	Written data content of the second group	1 byte	0x05
		1 byte	0xDC
	CRC 16 check code	1 byte	0xDA
		1 byte	0xC3

Write successful response frame	Function description	Data width	Data content
	Slave station address	1 byte	0x02
	Success function code	1 byte	0x10
	Successful written starting address	1 byte	0x61
		1 byte	0x1A
	Successful written address width	1 byte	0x00
		1 byte	0x02
	CRC 16 check code	1 byte	0x7F
		1 byte	0xC0

Write failed response frame	Function description	Data width	Data content
	Slave station address	1 byte	0x02
	Failure function code	1 byte	0x90
	Exception code	1 byte	0x04
	CRC 16 check code	1 byte	0xBD
		1 byte	0xC3

FC 23 (0x17) - read / write multiple registers

Communication frame description:

Command frame sent	Function description	Data width
	Slave station address	1 byte
	Function code = 23 (0x17)	1 byte
	Target starting address of read data	2 bytes (H, L)
	Target address length of read data (count in Word)	2 bytes (H, L)
	Target starting address of written data	2 bytes (H, L)
	Target address length of written data (count in Word)	2 bytes (H, L)
	Written data quantity (count in byte)	1 byte
	Written data content	n * (2 bytes (H, L))
	CRC 16 check code	2 bytes (H, L)

Read / write success response frame	Function description	Data width
	Slave station address	1 byte
	Success function code = 23 (0x17)	1 byte
	Successfully read data quantity (count in byte)	2 bytes (H, L)
	Read data content	n * (2 bytes (H, L))
	CRC 16 check code	2 bytes (H, L)

Read / write failure response frame	Function description	Data width
	Slave station address	1 byte
	Failure function code = 23 (0x17) + 128 (0x80) = 151 (0x97)	1 byte
	Exception code: 0x01 = illegal function 0x02 = illegal target address 0x03 = illegal value 0x04 = slave station error	1 byte
	CRC 16 check code	2 bytes (H, L)

Example of reading / writing multiple registers FC 23 (0x17):

- • Read the data in parameter P4-05 of the servo drive with slave station address of 2 (0x02), and simultaneously input data 4 (0x0004) to parameter P4-06.
- • The parameter starting address of P4-05 is 10504 (0x2908), and the data in P4-05 is 2 (0x0002), with a data width of 1 double word (DWord).
- • The parameter starting address of P4-06 is 10506 (0x290A), with a data width of 1 double word (DWord).

Command frame sent	Function description	Data width	Data content
	Slave station address	1 byte	0x02
	Function code	1 byte	0x17
	Target starting address of read data	1 byte	0x29
		1 byte	0x08
	Target address length of read data (count in Word)	1 byte	0x00
		1 byte	0x02
	Target starting address of written data	1 byte	0x29
		1 byte	0x0A
	Target address length of written data (count in Word)	1 byte	0x00
		1 byte	0x02
	Written data quantity (count in byte)	1 byte	0x04
	Written data content of the first group	1 byte	0x00
		1 byte	0x00
	Written data content of the second group	1 byte	0x00
		1 byte	0x04
	CRC 16 check code	1 byte	0x75
		1 byte	0x1A

Read / write success response frame	Function description	Data width	Data content
	Slave station address	1 byte	0x02
	Success function code	1 byte	0x17
	Successfully read data quantity (count in byte)	1 byte	0x04
	Data content of the target starting address (1 Word)	1 byte	0x00
		1 byte	0x00
	Data content of the second group address (1 Word)	1 byte	0x00
		1 byte	0x02
	CRC 16 check code	1 byte	0x4B
		1 byte	0xE6

Read / write failure response frame	Function description	Data width	Data content
	Slave station address	1 byte	0x02
	Failure function code	1 byte	0x97
	Exception code	1 byte	0x04
	CRC 16 check code	1 byte	0xBF
		1 byte	0xF3

Reading and writing of parameters

All parameters of Lexium18 series servo drives are divided into 10 groups:

- P0-Basic settings
- P1-Gain settings
- P2-Vibration suppression settings
- P3-I / O settings
- P4-Velocity and torque settings
- P5-Extended settings
- P6-Special settings
- P7- Internal task setting
- Pu- User-defined parameters
- Pm- Internal motion task setting

In addition to these fixed parameters, when the servo drive operates in internal programming mode, there are an additional 48 internal temporary variables MD0 … MD47, with 2 load loss maintainable variables LD0 / LD1.

For all parameter details of this servo drive, please refer to Parameters, page 418, while the parameters that can be read or written using communication are described as follows:

Readable parameters

The parameters that can be read by this servo drive using communication include:

- All of P0 parameter set
- All of P1 parameter set
- All of P2 parameter set
- All of P3 parameter set
- All of P4 parameter set
- All of P5 parameter set
- All of P6 parameter set
- All of P7 parameter set
- All of Pu parameter set, only when the servo drive is operating in internal programming mode.
- MD0…MD7, only when the servo drive is operating in internal programming mode.
- LD0 / LD1, only when the servo drive is operating in internal programming mode.
- All of Pm parameter set

Writable parameters

The parameters that can be written by this servo drive using communication include:

- All of P0 parameter set
- All of P1 parameter set
- All of P2 parameter set
- All of P3 parameter set
- All of P4 parameter set
- All of P5 parameter set
- All of P6 parameter set, except for read-only parameters.
- P7-00, only when the servo drive is operating in internal programming mode.
- All of Pu parameter set, only when the servo drive is operating in internal programming mode.
- MD0…MD7, only when the servo drive is operating in internal programming mode.
- LD0 / LD1, only when the servo drive is operating in internal programming mode.
- All of Pm parameter set

Expression of decimal

The data transmitted using MODBUS communication transmission are all integer values, therefore, parameters with decimal values will be transmitted as integer values, multiplied by a coefficient to recover to the actual parameter values with decimal values. For this coefficient, please refer to Parameters, page 418 for detailed unit descriptions of each parameter.

Storing values

The data written using MODBUS function exists in the servo drive memory, therefore, it is not maintained after power-down. If it is desired to permanently store the written value, the value can be permanently stored in EEPROM by writing 1 to address 1026.

Please note that frequent writing data to EEPROM can reduce the lifetime of memory.

Reading of servo drive state

In addition to parameters, the internal state of this servo drive can also be read using the communication function. The meaning of the servo drive state and corresponding state values that can be read through communication is as follows:

State meaning	MODBUS Address	Description
Current state of the drive	7172 (0x1C04)	Bit 0…3: current state of drive, including • 1/init • 2/nrdy • 3/dis • 4/rdy • 5/son • 6/run • 7/stop • 8/flt • 9/flt Bit 4 / 5: reserved Bit 6: existence of error of error class 1…4 Bit 7: existence of warning of error class 0 Bit 8: HALT function is activated Bit 9…31: reserved
Command position	2058 (0x080A)	Current command position Use of external input pulse unit (Pulse)
Actual position	7768 (0x1E58)	Current actual position Use of external input pulse unit (Pulse)
Command position	7704 (0x1E18)	Current command position Use of internal position computing unit (usr_p)
Actual position	7706 (0x1E1A)	Current actual position Use of internal position computing unit (usr_p)
Following error	7720 (0x1E28)	Error between the current instruction position and the actual position Use of internal position computing unit (usr_p)
Instruction speed	7694 (0x1E0E)	Instruction speed of motor Unit rpm
Actual speed	7696 (0x1E10)	Actual speed of motor Unit rpm
Current of motor	7686 (0x1E06)	Current general current of motor Unit 0.01 Arms
DC bus voltage	7198 (0x1C1E)	Current voltage of the drive DC bus. Unit 0.1 Vdc
Load rate of power stage	7214 (0x1C2E)	Current load rate of drive power stage Unit %
Motor load rate	7220 (0x1C34)	Motor current load rate Unit %
Load rate of brake resistor	7208 (0x1C28)	Current load rate of external brake resistor Unit %
Overload rate of power stage	7240 (0x1C48)	Current overload rate of drive power stage Unit %

State meaning	MODBUS Address	Description
Temperature of power stage	7200 (0x1C20)	Current temperature of drive power stage Unit °C
Drive temperature	7204 (0x1C24)	Current temperature inside the drive Unit °C
Current warning	7186 (0x1C12)	Warning with error class of 0 currently in effect inside the drive
Storage error 0	15384 (0x3C18)	History Error9 with error class of 1…4 stored inside the drive
Storage error 1	15386 (0x3C1A)	History Error9 with error class of 1…4 stored inside the drive
Storage error 2	15388 (0x3C1C)	History Error9 with error class of 1…4 stored inside the drive
Storage error 3	15390 (0x3C1E)	History Error9 with error class of 1…4 stored inside the drive
Storage error 4	15392 (0x3C20)	History Error9 with error class of 1…4 stored inside the drive
Storage error 5	15394 (0x3C22)	History Error9 with error class of 1…4 stored inside the drive
Storage error 6	15396 (0x3C24)	History Error9 with error class of 1…4 stored inside the drive
Storage error 7	15398 (0x3C26)	History Error9 with error class of 1…4 stored inside the drive
Storage error 8	15400 (0x3C28)	History Error9 with error class of 1…4 stored inside the drive
Storage error 9	15402 (0x3C2A)	History Error8 with error class of 1…4 stored inside the drive
Analog input 1	2306	Voltage value of analog input 1, in 1 mV.
Analog input 2	2314	Voltage value of analog input 2, in 1 mV.
Analog output 1	2390	Voltage value of analog input 1, in 1 mV.
Analog output 2	2392	Voltage value of analog input 2, in 1 mV.
Command position (internal position unit)	7698 (0x1E12)	Current command position Use of internal position computing unit (Inc)
Actual current of the motor (q-axis component for producing torque)	7682 (0x1E02)	Current actual current of the motor Unit: Arms
Input point status	2078 (0x081E)	Current input point status
Output point status	2080 (0x0820)	Current output point status
Average output power	7196 (0x1C1C)	Average output power of the current drive Unit: W
Brake resistor load factor (I2t)	7206 (0x1C26)	Current brake resistor load factor Unit: %
Output stage load factor (I2t)	7212 (0x1C2C)	Current output stage load factor Unit: %
Output stage overload rate (chip temperature)	7236 (0x1C44)	Current output stage overload rate (chip temperature) Unit: %
Output stage overload rate (power squared)	7238 (0x1C46)	Current output stage overload rate (power squared) Unit: %
Actual current of the motor (d-axis component, weak magnetic field)	7684 (0x1E04)	Current actual current of the motor Unit: Arms
Command voltage of the motor, q-axis component	7688 (0x1E08)	Current command voltage of the motor, q-axis component Unit: V
Command voltage of the motor, d-axis component	7690 (0x1E0A)	Current command voltage of the motor, d-axis component Unit: V
Total voltage of the motor (d-axis component and q-axis component vector sum)	7692 (0x1E0C)	Total voltage of the motor (d-axis component and q-axis component vector sum) Unit: V

State meaning	MODBUS Address	Description
Actual position (internal position unit)	7700 (0x1E14)	Current actual position (internal position unit) Use of internal position computing unit (Inc)
Current position deviation (internal position unit)	7702 (0x1E16)	Current position deviation (internal position unit) Use of internal position computing unit (Inc)
Command current of the motor (q-axis component for producing torque)	7712 (0x1E20)	Command current of the motor (q-axis component for producing torque) Unit: Arms
Command current of the motor (d-axis component, weak magnetic field)	7714 (0x1E22)	Command current of the motor (d-axis component, weak magnetic field) Unit: Arms
Current following position deviation (command and actual position)	7716 (0x1E24)	Current position deviation including dynamic position deviation Unit: rpm
Voltage usage rate of DC bus	7718 (0x1E26)	Voltage usage rate of the drive DC bus Unit: %
Current following position deviation (between command and actual position)	7724 (0x1E2C)	Current position deviation (internal position unit) Use of internal position computing unit (usr_p)
Current following position deviation (between command and actual position)	7736 (0x1E38)	Current position deviation (internal position unit) Use of internal position computing unit (Revolution)
Actual torque	7752 (0x1E48)	Current actual torque of the motor Unit: %
Actual position after curve planning	7940 (0x1F04)	Current actual position after curve planning Use of internal position computing unit (usr_p)
Actual velocity after curve planning	7948 (0x1F0C)	Current actual velocity after curve planning Use of internal position computing unit (usr_v)
Velocity command value for velocity feed-forward control	7950 (0x1F0E)	Current velocity command value for velocity feed-forward control Use of internal position computing unit (usr_v)
Acceleration command value for acceleration feed-forward control	7954 (0x1F12)	Current acceleration command value for acceleration feed-forward control Use of internal position computing unit (usr_a)
PTI input pulse command velocity	2060 (0x080C)	Current PTI input pulse command velocity Use of internal position computing unit (Inc/s)
Voltage of analog input 1	2306 (0x0902)	Current voltage of analog input 1 Unit: mV
Voltage of analog input 2	2314 (0x090A)	Current voltage of analog input 2 Unit: mV
Voltage of analog output 1	2390 (0x0956)	Current voltage of analog output 1 Unit: mV
Voltage of analog output 2	2392 (0x0958)	Current voltage of analog output 2 Unit: mV
Actual electronic gear shift position	10008 (0x2718)	Current actual electronic gear shift position Use of internal position computing unit (Inc)

Function of communication status node guard

This servo drive is capable of MODBUS communication state node guarding. Please refer to the following contents for setting and using this function.

Parameter setting:

The time value of node guarding timer is set by an internal parameter NGUARD:

- NGUARD =0: Node guarding function invalid.
- NGUARD >0: The time value of the node guarding timer with ms as the unit.

This internal parameter is 0 by default, viz. node guarding function invalid.

Enable and disable node guarding function:

Write a value greater than zero into the parameter NGUARD via the write function of MODBUS communication parameter, to enable the node guarding function. Each time when the servo drive receives an effective MODBUS frame with the drive as the target address, the servo drive will reset the node guarding timer.

Write the value zero into the parameter NGUARD via the write function of MODBUS communication parameter, to disable the node guarding function.

Mechanism of reporting error for node guarding:

If the servo drive does not receive any effective MODBUS communication frame with the drive as the target address when the countdown of node guarding timer is over, the system will trigger a fault:

- Exclusive access channel permission for the current MODBUS communication: the system will trigger an error B201 with an error class of 2, ; cancel motion via “Quick Stop”, and close the power stage of drive after the motor stops.
- No exclusive access channel permission for the current MODBUS communication: the system will trigger a warning B202 with an error class of 0, not disturbing the motion.

NGUARD	**Time of the node guarding timer**	**Minimum value**	**0**	**Unit**	**Related control mode**		
		Factory setting	**0**	**ms**	**P**	**V / Vz**	**T / Tz**
		Maximum value	**10000**		**MS**	**S**	**–**
Parameter function:			**MODBUS address: 5644**				

Time of the node guarding timer

- NGUARD =0: Node guarding function invalid.
- NGUARD >0: The time value of the node guarding timer with ms as the unit.

Write a value greater than zero into the parameter NGUARD via the write function of MODBUS communication parameter, to enable the node guarding function. Each time when the servo drive receives an effective MODBUS frame with the drive as the target address, the servo drive will reset the node guarding timer.

Write the value zero into the parameter NGUARD via the write function of MODBUS communication parameter, to disable the node guarding function.

If the servo drive does not receive any effective MODBUS communication frame with the drive as the target address when the countdown of node guarding timer is over, the system will trigger a fault.

This is an internal parameter, which can only be written in via MODBUS communication parameter.

RS-485 communication specification

Relative to RS-232, RS-485 is not only capable of one-to-many transmission, but also superior in anti-interference capability.

Differential pair is mainly used by RS-485 communication for signal sending and receiving. The sending end converts TTL signal into differential signal via drive circuit and then transmits it to the receiving end which converts the differential signal into TTL via the receiving circuit. Differential signal is used during transmission, so RS-485 communication owns good anti-interference capability. But the use of RS-485 communication is still limited, and attention should be paid to the following aspects in actual use:

- **• Limitation on maximum number of slave stations:**

  Lexium18 series servo drive can support up to 32 slave stations. The slave station address can be set via parameter P6-04, with a range of 1...247.

  When adopting RS-485 communication, a group of servo drives on the same network must be set with a unique address. If the address is repeatedly set, normal communication will not be possible.

- **• Limitation on maximum transmission speed (Baud rate):**

  RS-485 uses differential pair for signal transmission and owns good anti-interference capability, but its maximum transmission speed is affected by transmission distance.

  Generally, when the noise is low and 38400 bps communication Baud rate is used, the communication cable should not be longer than 15 m, to ensure success rate of communication transmission. The communication Baud rate is set via parameter P6-05.

- **• Quality of communication cable:**

  The quality of communication cable greatly affects communication, so shielded twisted pair must be used as the communication cable and the shielding layer of communication cable should be well grounded, to lower the noise interference during communication and improve the success rate of communication transmission.

- **• Use of terminal resistance:**

  During communication signal transmission, impedance mismatching may lead to communication signal reflection or distortion, which usually occurs at the terminal of transmission line.

  To solve this problem, it is necessary to add terminal resistance equal to characteristic impedance of line at the terminal of communication line. Generally, the characteristic impedance of RS-485 communication circuit is about 120 Ohm, so it is recommended to use 120 Ohm terminal resistance at the end of communication cable.

Glossary

A

Absolute movement:

The movement of the position defined by reference point.

Actual value:

In control engineering, the actual value is the value of the controlled variable at a given instant (for example, actual velocity, actual torque, actual position, actual current, and so on). An actual value can be a measured value (for example, the actual position can be a value measured by an encoder) or a derived value (for example, the actual torque can be a value derived from the actual current). The actual value is an input value used by the control circuits of the drive to reach the reference value. Definition as per IEC 61800-7 series and IEC 60050.

Analog input:

It is used to convert the voltage or current level received into values. These values can be stored and processed in Programmable Automation Controller.

Analog output:

It refers to converting the values in Programmable Automation Controller and sending the voltage or current level by proportion.

AWG:

(AWG) The standard adopted by North American areas and used for cross sectional dimension of designated wire.

C

CCW:

Counter Clockwise.

CSA:

(CSA) Canadian standards for industrial electronic equipment in hazardous environment.

CW:

Counter Clockwise.

D

DC bus:

Circuit that supplies the power stage with energy (direct voltage).

Degree of protection:

The degree of protection is a standardized specification for electrical equipment that describes the protection against the ingress of foreign objects and water (for example: IP 20).

DIN:

(Deutsches Institut für Normung) a German agency developing engineering and dimension standards.

DOM:

Date of manufacturing: The nameplate of the product shows the date of manufacture in the format DD.MM.YY or in the format DD.MM.YYYY. For example: Example:

31.12.19 corresponds to December 31, 2019.

31.12. 2019 corresponds to December 31, 2019.

Drive system:

System consisting of controller, driver amplifier and motor.

DTM:

(device type manager) falls into two categories:

- Device DTMs connected to field device configuration components.
- Comm DTMs connected to software communication modules.

DTM provides a unified structure for accessing device parameter as well as device configuration, operation and diagnosis. Those from simple graphical user interface used for setting device parameters to highly complicated applications of executing complex real-time computing for diagnosis and maintenance purpose all belong to DTMs.

E

Electronic Gear:

Calculation of a new output velocity for the motor movement based on the input velocity and the values of an adjustable gear ratio; calculated by the drive system.

EMC:

Electromagnetic Compatibility.

Encoder:

Sensor that converts a measured distance or angle into an electrical signal. This signal is evaluated by the drive to determine the actual position of a shaft (rotor) or a driving unit.

Error class::

Classification of errors into groups. The different error classes allow for specific responses to errors, for example by severity

Error:

Discrepancy between a detected (computed, measured or signaled) value or condition and the specified or theoretically correct value or condition.

F

Factory settings::

Settings when the product is shipped.

Fault Reset.:

The function used to quit “fault” operating state. Prior to this, the cause of the detected error must be removed.

Firmware:

BIOS, data parameters and programming instructions representing the composition of the operating system on the controller. The firmware is stored on the non-volatile memory in the controller.

Flash Memory:

Overwritable non-volatile memory. It is stored on a special erasable and reprogrammable EEPROM.

H

HMI:

(HMI) The operator interface used by industrial equipment for artificial control (generally graphical interface).

I

I / O::

Input / output

I2t Monitoring:

Anticipatory temperature monitoring. The expected temperature rise of components is calculated in advance on the basis of the motor current. If a limit value is exceeded, the drive reduces the motor current.

IEC:

(International Electrotechnical Commission) Non-profit and non-governmental international standard organization responsible for formulating and issuing international standards for all electrical appliances, electronic engineering and relevant technologies.

Inc:

Increment

Index pulse:

Signal of an encoder to reference the rotor position in the motor. The encoder returns one index pulse per revolution.

Internal units:

Resolution of the power stage at which the motor can be positioned. Internal units are specified in increments.

IT power supply::

A kind of power supply, in which all active components are isolated from the ground or grounded by high impedance. IT : isolé terre (French), isolated from ground. Relative to it: grounding power supply. Refer to TT / TN power supply.

L

LED:

(Light emitting diode) An indicator light that is ON at a low level charge.

Limit switch:

Switches that signal overtravel of the permissible range of travel.

LSB:

(Least significant bit) In traditional hexadecimal or binary representation, it is a part of number, address or field, written in as the monodromy at the rightmost.

M

MODBUS:

The protocol allowing communication among the devices connected to one network.

Monitoring function:

Monitoring functions acquire a value continuously or cyclically (for example, by measuring) in order to check whether it is within permissible limits. Monitoring functions are used for error detection. Monitoring functions are not safety functions.

Motion Direction:

In the case of a rotary motors, motion direction is defined in accordance with IEC 61800-7-204: Positive direction is when the motor shaft rotates clockwise as you look at the end of the protruding motor shaft.

MSB:

(Most significant bit / byte) In traditional hexadecimal or binary representation, it is a part of number, address or field, written in as the monodromy at the leftmost.

ms:

(ms)

N

Network:

The system of various driving units sharing a common data path and communication profile.

NMT:

Network Management, part of the CANopen communication profile; tasks include initialization of the network and devices, starting, stopping and monitoring of devices.

Node:

Addressable device on communication network.

Non-volatile memory:

Overwritable memory. It is stored on a special erasable and reprogrammable EEPROM.

P

Parameters:

Device data and values that can be read and set (to a certain extent) by the user.

PELV:

Protective Extra Low Voltage, low voltage with isolation. For more information: IEC 60364-4-41.

PE:

(Protective grounding) Common ground connection to help avoid an electrical hazard by using grounding potential to maintain any exposed conductive surface of equipment. In order to avoid possible voltage drop, no current is allowed to flow through the conductor (it is also called protective grounding in North American areas or called equipment grounding conductor in National Electrical Code).

Position deviation::

Position deviation refers to the deviation between the given position and actual position. The current position deviation comprises of dynamic position deviation and the position deviation determined by the load.

Power Stage:

The power stage controls the motor. The power stage generates current for controlling the motor on the basis of the motion signals from the controller.

Pulse/direction signals:

Digital signals with variable pulse frequencies which signal changes in position and direction of movement via separate signal wires.

PWM:

(Pulse width modulation) oscillates with adjustable duty cycle between closing and opening, to generate rapid output in rectangular wave form (although it can be adjusted to generate square wave). PTO is extremely suitable for simulation or approximate analog output, because it can adjust the voltage output by its cycle, making it very helpful in dimming or velocity control applications.

Q

Quick stop:

The function can be used for fast deceleration of a movement as a response to a detected error or via a command.

R

RCD:

Interrupted current protection switch

Regression::

The method of determining reference point for absolute movement.

RJ45:

Used for the standard type of 8-pin connector of network cable defined for Ethernet.

rms:

"Root Mean Square" value of a voltage (V_{rms}) or a current (A_{rms}); it is the abbreviation of root mean square value.

rpm:

Rotation per min

RS485:

Fieldbus interface as per EIA-485 which enables serial data transmission with multiple devices.

S

Scaling factor:

This factor is the ratio between an internal unit and a user-defined unit.

T

TN power supply::

Grounding power supply, grounding connections (PE conductor joining) differ. Relative to it: non-grounding power supply. Refer to IT power supply.

TT power supply::

Grounding power supply, grounding connections (PE conductor joining) differ. Relative to it: non-grounding power supply. Refer to IT power supply.

U

UL:

(Underwriters Laboratories) An American organization for product testing and safety certification.

Unit:

Unit whose reference to motor movement can be determined by the user via parameters.

Index

A

Access Channels 154
Accessory 72

B

Baud rate
  Limitations 559

C

Cables
  for use 95
  Specifications 113
  Type 78
Clockwise / counter-clockwise signals 192
Commissioning software 543
Communication cable 559
Control loop model 305
Cybersecurity Information 17

D

Diagnosis
  Error diagnosis 374
  Troubleshooting 383
Dimensions
  Drive 38
  Motor 44

E

EMC
  Electromagnetic Compatibility (EMC) 93
  EMC measures 94
Encoder
  Connection (CN2) 120
  Type 511
Environmental conditions
  Drive 31
  Motor 39
External braking resistor
  Connection 108
  Parameters 179
  Type 87
  Wiring diagram 108
External input filter 89

F

Fault reset 173
Field-00 539
Field-01 539
Field-02 539
Field-03 539
Field-04 539
Field-05 540
Field-06 540
Field-07 541
Field-08 541
Field-09 541
Field-10 541
Field-11 542

H

Holding brake
  Control 268
  Operation 175
  Specifications 40–42

I

if necessary 113
Installation 93
  Dimensions of the Mounting Holes 99
  Drive 97
  Motor 100
  Spacing and ventilation 98

L

Leakage current 94

M

Monitoring Functions 203, 223, 241
Motor phase 113

N

Nameplate
  Drive 22
  Motor 25

O

Operation state 155
  State Diagram 155
Overview 21

P

P0-00 432
P0-01 432
P0-02 433
P0-03 433
P0-04 433
P0-05 434
P0-06 434
P0-07 434
P0-08 434
P0-09 435
P0-10 435
P0-11 436
P0-12 436
P0-13 436
P0-14 436
P0-15 437
P0-16 437
P0-17 437
P0-18 437
P0-19 438
P0-20 438
P0-21 438
P0-22 438
P0-23 439

P0-24 439
P0-25 439
P0-27 439
P0-Basic settings 432
P1-00 440
P1-01 440
P1-02 440
P1-03 440
P1-04 440
P1-05 441
P1-06 441
P1-07 441
P1-08 441
P1-09 441
P1-10 442
P1-11 442
P1-12 442
P1-13 442
P1-14 442
P1-15 443
P1-16 443
P1-17 443
P1-18 443
P1-19 444
P1-20 444
P1-21 444
P1-22 444
P1-23 445
P1-24 445
P1-25 445
P1-26 445
P1-27 445
P1-28 446
P1-29 446
P1-30 446
P1-31 446
P1-32 447
P1-33 447
P1-34 448
P1-35 448
P1-36 449
P1-37 449
P1-38 449
P1-39 450
P1-40 450
P1-41 450
P1-42 451
P1-43 451
P1-44 451
P1-45 451
P1-46 452
P1-47 452
P1-48 452
P1-49 452
P1-50 452
P1-51 453
P1-52 453
P1-53 453
P1-54 453
P1-57 453
P1-58 454
P1-59 454
P1-60 454
P1-61 454
P1-62 455
P1-63 455
P1-64 455
P1-65 455
P1-66 455
P1-67 456
P1-68 456
P1-69 456
P1-70 456
P1-71 457
P1-72 457
P1-73 457
P1-74 457
P1-76 457
P1-77 457
P1-78 458
P1-80 458
P1-Gain settings 440
P2 - Vibration suppression setting..... 459
P2-00 459
P2-01 459
P2-02 459
P2-03 459
P2-04 460
P2-05 460
P2-06 460
P2-07 460
P2-08 460
P2-09 461
P2-10 461
P2-11 461
P2-12 461
P2-13 461
P2-14 462
P2-15 462
P2-16 462
P2-17 462
P2-18 462
P2-19 463
P2-20 463
P2-21 463
P2-22 463
P2-23 463
P2-24 464
P2-25 464
P2-26 464
P2-27 464
P2-28 464
P2-29 465
P3 - I / O settings..... 466
P3-00 466
P3-01 467
P3-02 468
P3-03 468
P3-04 468
P3-05 468
P3-06 468
P3-07 469
P3-08 469
P3-09 469
P3-10 469
P3-11 470
P3-12 470
P3-13 470
P3-14 471
P3-15 471
P3-16 471
P3-17 471
P3-18 472
P3-19 472
P3-20 473
P3-21 474
P3-22 474
P3-23 474

P3-24 475
P3-25 476
P3-26 476
P3-27 476
P3-28 477
P3-29 477
P3-30 477
P3-31 477
P3-32 478
P3-33 478
P3-34 478
P3-35 478
P3-36 478
P3-37 479
P3-38 479
P3-39 479
P3-40 479
P3-41 480
P3-42 480
P3-43 480
P3-44 480
P3-45 481
P3-46 481
P3-47 481
P3-48 482
P3-49 482
P3-50 482
P3-51 482
P3-52 483
P3-53 483
P3-54 483
P3-55 483
P3-56 483
P3-57 484
P3-58 484
P3-59 484
P3-60 484
P3-61 485
P3-62 485
P3-63 485
P4-00 486
P4-01 486
P4-02 486
P4-03 486
P4-04 487
P4-05 487
P4-06 487
P4-07 487
P4-08 487
P4-09 487
P4-10 488
P4-11 488
P4-12 488
P4-13 488
P4-14 488
P4-15 488
P4-16 489
P4-17 489
P4-18 489
P4-19 489
P4-20 490
P4-21 490
P4-22 490
P4-23 490
P4-24 490
P4-25 491
P4-26 491
P4-27 491
P4-28 491
P4-29 491
P4-30 491
P4-31 492
P4-32 492
P4-33 492
P4-34 492
P4-35 492
P4-36 493
P4-37 493
P4-38 493
P4-39 493
P4-Velocity and torque settings 486
P5 - Extended settings 494
P5-00 494
P5-01 494
P5-02 494
P5-03 494
P5-04 495
P5-05 495
P5-06 495
P5-07 495
P5-08 495
P5-09 496
P5-10 498
P5-11 498
P5-12 498
P5-13 499
P5-14 499
P5-15 499
P5-16 500
P5-17 500
P5-18 500
P5-19 501
P5-20 501
P5-21 501
P5-22 502
P5-23 502
P5-24 502
P5-25 502
P5-26 503
P5-27 503
P5-28 503
P5-29 503
P5-32 503
P5-33 504
P5-34 504
P5-35 504
P5-36 504
P5-37 505
P5-38 505
P5-39 506
P5-40 506
P5-42 506
P5-43 506
P5-44 506
P5-46 507
P5-47 507
P5-48 507
P5-50 507
P5-51 507
P5-52 508
P5-54 508
P5-55 508
P5-56 508
P5-57 509
P6-00 510
P6-01 511
P6-02 511
P6-03 511

P6-04 512
P6-05 512
P6-06 512
P6-07 512
P6-08 512
P6-09 513
P6-10 513
P6-11 513
P6-12 513
P6-13 513
P6-14 514
P6-15 514
P6-16 514
P6-17 514
P6-18 515
P6-19 515
P6-20 515
P6-21 515
P6-22 515
P6-23 516
P6-24 516
P6-25 516
P6-26 516
P6-27 517
P6-28 517
P6-29 517
P6-30 517
P6-31 517
P6-32 518
P6-33 518
P6-34 518
P6-35 518
P6-36 518
P6-37 519
P6-38 519
P6-39 519
P6-40 519
P6-41 522
P6-42 523
P6-43 523
P6-44 523
P6-45 523
P6-47 524
P6-48 524
P6-49 524
P6-50 525
P6-51 526
P6-52 526
P6-53 526
P6-Special settings 510
P7 - User-defined monitoring parameters 527
P7-00 527
P7-01 527
P7-02 527
P7-03 527
P7-04 527
P7-05 528
P7-08 528
P7-09 528
P7-10 528
P7-11 528
P7-12 528
P7-13 529
P7-14 529
P7-15 529
P7-16 529
P7-17 529
Parameters 418
PC 543
PID model 305
Power supply
  Input power 31
  Power connection 104
Pu User-defined internal programming parameters 532
Pu-00 532
Pu-01 532
Pu-02 532
Pu-03 532
Pu-04 533
Pu-05 533
Pu-06 533
Pu-07 533
Pu-08 533
Pu-09 533
Pu-10 533
Pu-11 534
Pu-12 534
Pu-13 534
Pu-14 534
Pu-15 534
Pu-16 534
Pu-17 534
Pu-18 535
Pu-19 535
Pu-20 535
Pu-21 535
Pu-22 535
Pu-23 535
Pulse/direction signals 192

R

Reservation. 192

S

Safety Information 9
Slave station address
  Quantity limit 559
Specifications
  Drive 31
  Motor 39
Supporting
  Drive and motor 28

T

Terminal resistance 559
the adaptive control model. 305
the heat 397
Type and code
  Drive 23
  Motor 26

Schneider Electric
No. 6, Wangjing East Road, Chaoyang District,
Beijing

010-84346699
400 810 131535

www.se.com

As standards, specifications, and design change from time to time, please ask for confirmation of the information given in this publication.

© 2023 – 2026 Schneider Electric. All rights reserved.

PKR6845702-06